Vol. I

TRANSCRIPT OF RECORD

Supreme Court of the United States

OCTOBER TERM, 1935

No. 388

A. G. TRIPLETT, R. M. TRIPLETT, A. NELSON, ET AL., PETITIONERS,

vs.

PERCIVAL D. LOWELL, FRANCIS W. DUNMORE, AND DUBILIER CONDENSER CORPORATION

ON WRIT OF CERTIORARI TO THE UNITED STATES CIRCUIT COURT OF APPEALS FOR THE FOURTH CIRCUIT

PETITION FOR CERTIORARI FILED AUGUST 21, 1935.

CERTIORARI GRANTED DECEMBER 9, 1935.

SUPREME COURT OF THE UNITED STATES

OCTOBER TERM, 1935

No. 388

A. G. TRIPLETT, R. M. TRIPLETT, A. NELSON, ET AL., PETITIONERS,

vs.

PERCIVAL D. LOWELL, FRANCIS W. DUNMORE, AND DUBILIER CONDENSER CORPORATION

ON WRIT OF CERTIORARI TO THE UNITED STATES CIRCUIT COURT OF APPEALS FOR THE FOURTH CIRCUIT.

VOL. I.

INDEX

	Page
Record from D. C. U. S., District of Maryland	1
Caption	1
Bil of complaint	2
Answer to bill of complaint	12
Defendants' notice, motion to dismiss and affidavit in support of motion to dismiss	19
Plaintiffs' answering affidavit to motion to dismiss	24
Agreed statement of evidence in narrative form	29
Opening statement on behalf of plaintiffs	49

JUDD & DETWEILER (INC.), PRINTERS, WASHINGTON, D. C., JANUARY 10, 1936.

—7802-C

Record from D. C. U. S., District of Maryland—Continued

	Direct.	Cross.	Re-Dir.
Plaintiffs' Witnesses—			
Dr. Federick W. Lee	75	82	97
Francis W. Dunmore	101		
Percival D. Lowell	123		
Percival D. Lowell (recalled)	227		
Dr. Frederick W. Lee (rebuttal)			224
Testimony on behalf of plaintiffs in case "Dubilier Condenser Corporation et al. vs. Radio Corporation of America, in District Court of Delaware"—			
Dr. Frederick W. Lee	175	185	
Glenn W. Carpenter	192		
Cecil E. Brigham	210	213	217
Alexander Nyman	217	222	
Testimony on behalf of defendant in case "Dubilier Condenser Corporation et al. vs. Radio Corporation of America, in District Court of Delaware"—			
Frank Waterman	194	208	
Defendants' case			129
Defendants' Witnesses—			
Allen B. Dumont	146	162	

Plaintiffs' Exhibits— No.	Page
90. (U. S. Patent 1,606,212 to Dunmore & Lowell)	74
91. (Stewart-Warner Set)	79
92. (Diagram)	81
93. (Stipulation dated June 5, 1934, regarding sale of certain apparatus by defendants)	81
94. (Colored photostat of Chasis Model 109)	82
95. (Simplified diagram)	82
96. (Diagram)	100
97. (Diagram)	116
98. (Letters to Magnavox Co.)	117
99. (Letters to General Electric Co. and reply)	118
100. (Letter to Westinghouse Lamp Works and reply)	118
101. (License agreement to Brandes Products Corporation)	119
102. (License to Grigsby-Grunow-Hinds Co.)	122
103. (Grigsby-Grunow set)	122
104. Bread Board Model (referred to by Dr. Lee)	122
105. (Letter to Balto. Gas Light Co.)	123
106. (Bureau of Standards Scientific Paper No. 450)	126
107. (Reproduction of drawing by Witness Lowell)	128
108. (Instructions for care and operation of the Majestic Screen Grid Radio Receivers, August, 1931)	128
109. (Circuit diagram)	227
Proffer of evidence under Rule 46	129
	230
Harry R. Van De Venter	230
Francis W. Dunmore	231
Frederick W. Lee	237
Percival D. Lowell	254

Index of exhibits offered in proffer of evidence under Rule 46.

Record from D. C. U. S., District of Maryland—Continued

Plaintiff's Exhibits:

No.		Page
7.	Dubilier Catalogue describing Super-Ducon	230
7a.	Blueprint of wiring diagram of Super-Ducon	230
7b.	Dubilier Super-Ducon (physical)	230
8.	Westinghouse RA-DA Receiving Set	231
9.	Magnavox Loud Speaker	231
14.	Time cards, monthly reports and laboratory notebook of Francis W. Dunmore	232
15.	Photograph of Type A Relay	232
19.	Bureau of Standards Receiving Set	233
20.	Rectifying Unit for Bureau of Standards Receiving Set	233
23.	Original Type B Relay	234
24.	Radio Instrument Co. AC Set	235
25.	Rectifier Unit for Radio Instrument Co. Set	235
26.	Box type Lowell & Dunmore Receiver	236
27.	Freed-Eiseman set wired for A. C. by Lowell & Dunmore	236
28.	Rectifier for Freed-Eisemann set wired for A. C.	236
53.	Publications as follows A. I. E. E. Journal, April, 1922, pp. 242-246. Radio News, July, 1922. Radio, March, 1922.	234
55.	Electrical Journal, December, 1922, pp. 501-505	260
60.	Textbook "Radio Phone Receiving," published 1922, D. Van Norstrand Co., N. Y. C.	238
61.	Radio Phone Receiving, pages 73-76	238
62.	Textbook of Radio, published by Technical Book Co., N. Y. C., 1922	239
63.	Textbook of Radio, pp. 177-182, 187	239
64.	Textbook of Radio, pp. 185 and 186	239
65.	Radio Phone Receiving, p. 134	239
66.	Textbook of Radio, pp. 177-182, 187	239
67.	Diagram including Fig. 1 of Patent 1,455,141 and form of current in different sections	240
68.	Demonstration set Panels A to J, inclusive	246
69.	Wiring diagram of Panels A to J, inclusive	246
70.	Wiring diagram of Panels A, B, C, D, E, F, combined	246
71.	Wiring diagram of Panels A, G, C, H. E, F, combined	246
72.	Wiring diagram of Panels A, I, C, J, E, F, combined	247
73.	Capacity and resistance coupling unit	248
74.	Stipulation as to defendant's circuit of models 104, 105, 106, 108 and 109	249
75.	Colored photostats of wiring diagrams of defendant's sets S. W. 104, 105, 106, 108 and 109	249
76.	Schematic diagram of super-heterodyne	250
77.	Simplified colored diagram of circuits of defendant's sets S. W. 104, 105, 106, 108 and 109	250
78.	Stewart-Warner Set Model 109	252
79.	Filter test diagram S. W. set 109	252
80.	High frequency test diagram S. W. set 109	252
81.	Grid bias diagram S. W. sets 104, 105, 106, 108 and 109	253

Record from D. C. U. S., District of Maryland—Continued
Plaintiff's Exhibits—Continued
No. Page
82. Cabinet for Stewart-Warner set 109 254
83. Time cards, monthly reports and laboratory note book of Percival D. Lowell 257
84. Pencil description of A. C. amplifier made by Lowell at Arcade Bowling Alleys 258
85. Photograph of Bureau of Standards A. C. set showing Lowell 260
86. Pittsburgh Post, June 6, 1923, Radio Section, p. 1 260
87. Dunmore checks to Brady, dated June 29, 1922, and to Commissioner of Patents, dated March 25, 1922 259
Defendants' Exhibits—
"A" (Drawing of 104 Loud Speaker) 160
"B" (U. S. Patent 1,282,439 to Langmuir) 160
"C" (U. S. Patent 1,251,377 to Hull) 160
"D" (U. S. Patent 1,195,362 to White) 160
"E" (U. S. Patent 1,587,084 to Robinson) 160
"F" (U. S. Patent 1,105,924 to Pridham & Jensen) 160
"G" (File wrapper of patent in suit) 162
"H" (Receiver) 170
Exhibits Offered by Plaintiff in Delaware Case, viz:
No.
32. (Diagram) 177
33. (Diagram) 178
34. (Diagram) 178
35. (Diagram) 179
36. (Diagram) 180
37. (Diagram) 181
38. (Diagram) 182
39. (Diagram) 184
40. (Diagram) 184
Exhibits Offered by Defendant in Delaware Case, viz:
No.
77. (Article entitled "Church Service Heard Half a Mile) ... 199
78. (U. S. Patent 1,105,924 to Pridham & Jensen) 200
79. (Simplified Schematic Diagram Radiola 28, connected to Loud Speaker 104) 207
80. (Diagrammatic Sketch, 104 Loud Speaker floating coil location) 207
Oral opinion of court 263
Final decree 275
Assignment of errors on behalf of plaintiffs 278
Assignment of errors on behalf of defendants 280
Stipulation as to record on appeal 281
Stipulation in re Exhibits to be incorporated in record and approval of United States Circuit Court of Appeals 289
Stipulation in re Exhibits to be incorporated in record and approval of United States Circuit Court of Appeals 290
Stipulation as to plaintiffs' exhibits to be treated as physical exhibits and approval of United States Circuit Court of Appeals. 292
Stipulation waiving certification of certain exhibits 294

Record from D. C. U. S., District of Maryland—Continued

Page

Memorandum of the clerk 295
Order to transmit record 295
Clerk's certificate 296
Proceedings in U. S. Circuit Court of Appeals, Fourth Circuit 297
Stipulation as to Defendants' Exhibit G, approved by Judge Parker .. 297
Appearance for appellants and cross-appellees 298
Appearance for appellees and cross-appellants 298
Addendum to transcript of record 298
Depositions of witnesses in the case of Dubilier Condenser Corporation and Francis W. Dunmore v. Radio Corporation of America, and Dubilier Condenser Corporation, Percival D. Lowell, and Francis W. Dunmore v. Radio Corporation of America, in the District of Delaware.
Depositions on Behalf of Plaintiff:

	Direct	Cross	Re-Direct	Re-Cross
George H. Lewis	302	304	310	
John B. Brady	311	317	326	327
			328	
			336	
Roy E. Sweeney	337	338		
Joseph D. R. Freed	341	343	345	
Depositions on Behalf of Defendant:				
Alexander Ernest Reoch	347	354		
John H. Dellinger	356			

Statement of counsel as to licenses 368
Exhibits offered in case of Dubilier Condenser Corporation and Francis W. Dunmore v. Radio Corporation of America, and, Dubilier Condenser Corporation, Percival D. Lowell, and Francis W. Dunmore v. Radio Corporation of America, in the District Court of Delaware.
Plaintiffs' Exhibit Number
1. Lowell & Dunmore U. S. Patent No. 1,455,141, May 15, 1923, in Suit; printed on pages 2-11 of Volume II of Record 371
2. Dunmore & Lowell U. S. Patent No. 1,606,212, November 9, 1926, in Suit; printed on page 373, Volume II of Record (same as Exhibit 90) 371
3. Dunmore U. S. Patent No. 1,635,117, July 5, 1927, in Suit; printed on pages 12-23 of Volume II of Record 371
4. License Agreement, Dubilier Condenser and Radio Corporation and Francis W. Dunmore and Percival D. Lowell, October 20, 1924; printed on pages 171-182, Volume II of Record (same as Exhibit 4) 371
5. License Agreement, Dubilier Condenser Corporation and Francis W. Dunmore and Percival D. Lowell, May 19, 1927 371

Addendum to transcript of record—Continued
Plaintiff's Exhibits—Continued

Number		Page
6.	License Agreement, Dubilier Condenser Corporation and Francis W. Dunmore, July 15, 1927	383
8.	Paper No. 450, October 2, 1922, U. S. Bureau of Standards, "An Electron Tube Amplifier Using 60-Cycle Alternating Current to Supply Power for the Filaments and Plates," by P. D. Lowell; same as Plaintiff's Exhibit 106. Appeal Record, Volume II, page 518	389
9.	Letter, Wendell L. Carlson, General Electric Co., to John B. Brady, May 25, 1923	390
10.	Letter, Ira J. Adams, Radio Corporation of America, to John B. Brady, November 16, 1923	391
11.	Brady Diagram of Circuit of Lowell & Dunmore Box Type Set	393
12.	Brady Diagram of Circuit of Lowell & Dunmore Neutrodyne Set	395
13.	Letter, Ira J. Adams, Radio Corporation of America, to John B. Brady, July 19, 1927	397
13-A.	Letter, John B. Brady to Radio Corporation of America, July 13, 1927	398
13-B.	Letter, Ira J. Adams to John B. Brady, July 11, 1927	399
13-C.	Letter, Victor S. Beam to John B. Brady, July 5, 1927	400
13-D.	Letter John B. Brady to Victor S. Beam, July 1, 1927	401
13-E.	Letter, Victor S. Beam to John B. Brady, June 24, 1927	402
13-F.	Letter, John B. Brady to Victor Beam, June 13, 1927	403
46.	Photograph of Lowell-Dunmore Box Type Radio Set; same as Plaintiff's Exhibit 47. Appeal Record, Volume II, page 253	404
47.	Photograph of Lowell-Dunmore Neutrodyne Set; same as Plaintiff's Exhibit 49. Appeal Record, Volume II, page 255	404
48.	Lowell & Dunmore Box Type Set; same as Plaintiff's Exhibit 26. Appeal Record	404
49.	Lowell & Dunmore Neutrodyne Set; same as Plaintiff's Exhibit 27	404
49a.	Rectifying Unit for Lowell & Dunmore Neutrodyne Set; same as Plaintiff's Exhibit 28	404
50.	Original Diagram of Lowell-Dunmore Box Type Set; same as Plaintiff's Exhibit 50. Volume II, page 258	404
51.	License Agreement between F. W. Dunmore and P. D. Lowell, and Radio Instrument Company, June 1, 1922	405
52.	Letter, Bureau of Patent Development, Westinghouse E. & M. Company to John B. Brady, July 31, 1923	409
52a.	Letter, John B. Brady to Bureau of Patent Development, Westinghouse E. & M. Company, July 23, 1923	410

Addendum to transcript of record—Continued
Plaintiff's Exhibits—Continued
Number Page
53. Pages 242-246, inclusive, Transactions of American Institute of Electrical Engineers, April, 1922, "A Relay Recorder for Remote Control by Radio," by F. W. Dunmore; same as Plaintiff's Exhibit 53. Appeal Record, Volume II, page 259 411
54. Page 411, Radio News for September, 1922, "Discarding Storage Batteries," by S. R. Winters; same as Plaintiff's Exhibit 21. Appeal Record, Volume II, page 243 411
55. Pages 501-505, inclusive, The Electrical Journal, December, 1922, "A Practical Alternating Current Radio Receiving Tube," by H. M. Freeman; same as Plaintiff's Exhibit 55 412
56. Pages 32-35, inclusive Q S T. October, 1922, "Amplifier Operation from A. C. Supply," by P. D. Lowell; same as Plaintiff's Exhibit 21. Appeal Record, Volume II, page 239 412
57. Pages 21, 22, Telephony, September 16, 1922, Vol. 83, No. 12, "Batteryless Radio Receiving Set," by P. D. Lowell; same as Plaintiff's Exhibit 21. Appeal Record, Vol. II, page 245 412
58. Pages 27, 28, "Radio" for September, 1922 "An Amplifier with A. C. Filament and Plate Supply," by P. D. Lowell; same as Plaintiff's Exhibit 21. Appeal Record, Volume II, page 233 412
59. Radio News for November, 1922, pages 838, 839, 1001, 1002, "Radio Messages Typed Automatically From Airplane to Ground," by S. R. Winters; same as Plaintiff's Exhibit 59. Appeal Record, Volume II, page 275 412
Defendants'
Exhibit
Number
1. Time Cards, Monthly Reports and Laboratory Note Book of Francis W. Dunmore; same as Plaintiffs' Exhibit 14 treated as Physical Exhibit, see Stipulation, page —, Volume 1 of Record 413
7. Memorandum of January 9, 1922, Lowell to Dellinger ... 413
11. R. C. A. Radiola 16 Service Notes 413
12. R. C. A. Radiola 18 Service Notes 413
13. R. C. A. Radiola 60 Service Notes 413
Stipulation Respective Exhibits 11, 12 and 13 and Certification of Addendum to Transcript of Record 413
Clerk's Certificate 415
Argument of cause 417
Opinion, Soper, J. 417
Decree 433
Issuance of mandate 437
Clerk's certificate 437
Order allowing certiorari 437a

TRANSCRIPT OF RECORD

UNITED STATES OF AMERICA,
District of Maryland, to wit:

At a District Court of the United States for the District of Maryland, begun and held in the City of Baltimore on the first Tuesday in June, (being the 5th day of the same month) in the year of our Lord One Thousand Nine Hundred and Thirty-Four.

Present: The Honorable William C. Coleman, Judge Maryland District; Bernard J. Flynn, Esq., Attorney; August Klecka, Esq., Marshal; Arthur L. Spamer, Clerk.

Among other were the following proceedings, to wit:

Percival D. Lowell, Francis W. Dunmore and Dubilier Condenser Corporation,

Plaintiffs,

vs.

A. G. Triplett, R. M. Triplett, A. Nelson, C. M. Triplett, Jr., and the Baltimore Gaslight Company,

Defendants.

In Equity No. 2193

BILL OF COMPLAINT.

Filed 17th August, 1933.

UNITED STATES DISTRICT COURT, DISTRICT OF MARYLAND.

Percival D. Lowell, Francis W. Dunmore and Dubilier Condenser Corporation, Plaintiffs, vs. A. G. Triplett, R. M. Triplett, A. Nelson, C. M. Triplett, Jr., and the Baltimore Gaslight Company, Defendants.	In Equity No. 2193 On U. S. Letters Patent Nos. 1,455,141 1,606,212 1,635,117

To the Honorable the Judges of the District Court of the United States for the District of Maryland:

The plaintiffs by this bill of complaint allege as follows:

1. The plaintiff Percival D. Lowell is a citizen of the United States and a resident of Washington, District of Columbia; and the plaintiff Francis W. Dunmore is a citizen of the United States and a resident of Washington, District of Columbia. The plaintiff, Dubilier Condenser Corporation is a corporation duly organized and existing under and by virtue of the laws of the State of Delaware, and a citizen, resident and inhabitant of said state.

2. On information and belief that the defendant Baltimore Gaslight Company is a partnership composed of the defendants A. G. Triplett, R. H. Triplett, A. Nelson and C. M. Triplett, Jr., that all of said individual defendants are inhabitants of the State of Maryland and together with the defendant Baltimore Gaslight Company maintain offices in the City of Baltimore, in the District and State of Maryland.

3. That the above named defendants within the District of Maryland and elsewhere in the United States have committed within the last six years and are now

continuing and threatening to continue to commit the acts of infringement complained of herein.

4. That this is a suit in equity brought under the Patent Laws of the United States for infringement of the hereinafter mentioned United States Letters Patent No. 1,455,141; No. 1,606,212 and No. 1,635,117 issued respectively on May 15, 1923, November 9, 1926 and July 5, 1927.

5. Upon information and belief, that Percival D. Lowell and Francis W. Dunmore, citizens of the United States, and, under the laws of the United States then in force, the first, true, original and joint inventors of certain new and useful improvements in radio receiving apparatus, did on March 27, 1922, duly make and file an application in writing with the Commissioner of Patents of the United States for Letters Patent upon said improvements and that at the time of making application, said improvements had not been known or used by others in this country, and had not been patented or described in any printed publication in this or any foreign country, before their invention or discovery thereof, or more than two years prior to their application aforesaid, and had not been in public use or on sale in this country for more than two years prior to their application aforesaid, and had not been patented in any country foreign to the United States on any application filed by them or their legal representatives or assigns more than twelve months prior to their application aforesaid, and had not been abandoned.

6. That Letters Patent numbered 1,455,141 was, on May 15, 1923, duly issued upon the aforesaid application filed March 27, 1922, all the provisions and requirements of the statutes of the United States in such case made and provided having been duly complied with, said patent being issued to said Percival D. Lowell and Francis W. Dunmore, their heirs and assigns, whereby there was granted to them for the term of seventeen years from the date thereof, the right to exclude others from making, using, vending, the invention and improvements set forth, described and claimed therein, throughout the United States and territories thereof. That thereafter on or about July 8, 1933, the plaintiffs herein entered a disclaimer in the United States Patent Office disclaim-

ing portions of said Letters Latent which through inadvertence, accident or mistake were too broad, including that of which said patentees were not the first inventors all of which will more fully and at large appear by reference to the said letters patent and disclaimer or duly certified copies ready in court to be produced.

7. Upon information and belief, that Francis W. Dunmore and Percival D. Lowell, citizens of the United States and under the laws of the United States then in force, the first, true, original and joint inventors of certain new and useful improvements in signal receiving systems, did on March 21, 1922, duly make and file application in writing with the Commissioner of Patents of the United States for letters patent upon said improvements; and that at the time of making said application, said improvements had not been known or used by others in this country, and had not been patented or described in any printed publication in this or any foreign country, before their invention or discovery thereof, or more than two years prior to their application aforesaid, and had not been in public use or on sale in this country for more than two years prior to their application aforesaid, and had not been patented in any country foreign to the United States on any application filed by them or their legal representatives or assigns more than twelve months prior to their application aforesaid, and had not been abandoned.

8. That Letters Patent Numbered 1,606,212 was, on November 9, 1926, duly issued upon the aforesaid application filed March 21, 1922, all the provisions and requirements of the Statutes of the United States in such case made and provided having been duly complied with, said patent being issued to said Francis W. Dunmore and Percival D. Lowell, their heirs and assigns, whereby there was granted to them for the term of seventeen years from the date thereof, the right to exclude others from making, using and vending, the invention and improvement set forth, described and claimed therein, throughout the United States and territories thereof, all of which will more fully and at large appear by reference to the said letters patent or a duly certified copy thereof ready in court to be produced.

9. Upon information and belief, that Francis W. Dunmore, a citizen of the United States and under the laws of the United States then in force, the first, true, original and sole inventor of certain new and useful improvements in signal receiving systems, did on February 27, 1922, duly make and file application in writing with the Commissioner of Patents of the United States for letters patent upon said improvements; and that at the time of making said application, said improvements had not been known or used by others in this country, and had not been patented or described in any printed publication in this or any foreign country, before his invention or discovery thereof, or more than two years prior to his application aforesaid, and had not been in public use or on sale in this country for more than two years prior to his application aforesaid, and had not been patented in any country foreign to the United States on any application filed by him or his legal representatives or assigns more than twelve months prior to his application aforesaid, and had not been abandoned.

10. That Letters Patent Numbered 1,635,117, was, on July 5, 1927, duly issued upon the aforesaid application filed February 27, 1922, all the provisions and requirements of the Statutes of the United States in such case made and provided having been duly complied with, said patent being issued to said Francis W. Dunmore, his heirs and assigns, whereby there was granted to him and them for the term of seventeen years from the date thereof, the right to exclude others from making, using and vending, the invention and improvement set forth, described and claimed therein, throughout the United States and territories thereof. That thereafter on or about July 8, 1933, the plaintiffs, Francis W. Dunmore and Dubilier Condenser Corporation, entered a disclaimer in the United States Patent Office disclaiming portions of said Letters Patent which through inadvertence, accident or mistake were too broad, including that of which said patentee was not the first inventor all of which will more fully and at large appear by reference to the said patent and disclaimer or duly certified copies thereof ready in court to be produced.

11. That upon information and belief by means of certain agreements executed October 20, 1924, May 19,

1927 and July 15, 1927, Dubilier Condenser Corporation, one of the plaintiffs herein, became vested with full rights as exclusive licensee together with the right to sue for infringement of said patents all of which will more fully and at large appear by reference to said agreements or duly certified copies thereof ready in court to be produced; that by authority of said agreements and the rights arising thereunder the plaintiff, Dubilier Condenser Corporation, has jointed the said Percival D. Lowell and Francis W. Dunmore as co-plaintiffs, and has signed their names to this bill of complaint and has notified them thereof.

12. That the plaintiff, Dubilier Condenser Corporation as been ever since October 20, 1924, May 19, 1927 and July 15, 1927, respectively, and now is the exclusive licensee under said patents, together with the right to sue for infringement of said patents, and the plaintiffs, Percival D. Lowell and Francis W. Dunmore, the joint owners of the legal title to said Letters Patent No. 1,455,141 and 1,606,212, and the plaintiff, Francis W. Dunmore, the owner of the legal title to said Letters Patent 1,635,117 and all rights in said Letters Patent and all rights to recoveries thereunder are and have been since October 20, 1924, May 19, 1924 and July 15, 1927, respectively vested in the plaintiffs as aforesaid.

13. That the inventions and improvements of said Letters Patent Nos. 1,455,141, 1,606,212 and 1,635,117 are of great value and importance and benefit to the public; that plaintiffs Percival D. Lowell and Francis W. Dunmore and plaintiff Francis W. Dunmore respectively, reduced the inventions thereof to practice and sought to introduce the same upon the market; to that end said plaintiffs licensed plaintiff Dubilier Condenser Corporation and others and plaintiff Dubilier Condenser Corporation has granted licenses under said Letters Patent to others; and said licensees have placed devices on the market using and embodying the inventions of said Letters Patent; plaintiff Dubilier Condenser Corporation acting under its license invested large sums in developing, perfecting, making and marketing apparatus employed in carrying out said inventions; and the inventions have gone into large use and said Letters Patent have been infringed upon to a large extent.

That plaintiff Dubilier Condenser Corporation filed bills of complaint in the United States District Court for the District of Delaware on or about September 20, 1927 against the Radio Corporation of America charging infringement upon certain claims of said Letters Patent; that on or about August 12, 1929, the said District Court entered its decree adjudging claims 3 and 14 of said Letters Patent No. 1,455,141 to be valid and infringed and adjudging claim 9 of said patent No. 1,635,117 to be valid and infringed; that thereupon the said defendant Radio Corporation of America perfected an appeal from the said decision to the United States Circuit Court of Appeals for the Third Circuit, which Court reversed the aforesaid decree of the District Court for the District of Delaware and held said claims invalid and directed the said bills of complaint to be dismissed; that the said decree of the District Court held the said patent No. 1,606,212 not to be infringed and no appeal was taken from said decree with respect to said patent No. 1,606,212; that a petition for rehearing was filed in the said Circuit Court of Appeals with respect to the decision of that Court upon claim 9 of patent No. 1,635,117, which petition was denied; that thereafter plaintiff filed petitions in the Supreme Court of the United States for writs of certiorari to review said decisions of the Circuit Court of Appeals for the Third Circuit with respect to said patent Nos. 1,455,141 and 1,635,117 and the Supreme Court of the United States denied said petitions on or about October 25, 1932; and thereafter and on or about July 8, 1933, plaintiffs herein filed the disclaimers recited in paragraphs 8 and 10 hereof.

14. Upon information and belief that apparatus made under said letters patent by the plaintiff Dubilier Condenser Corporation and by the several licensees under said patents was duly marked "Patented" with the patent number and date thereof in accordance with the statute.

15. On information and belief that the said defendants and each of them without license or permission and in violation, infringement and contributory infringement of said Letters Patent No. 1,455,141, contriving to injure plaintiffs and to deprive them of the benefits and advantages which might and otherwise would accrue unto them

from said invention, after the issue of said Letters Patent as aforesaid and within six years before the commencement of this suit and prior to the execution of this bill of complaint, did wrongfully and unlawfully sell and use within the District of Maryland and elsewhere within the United States, and are now selling and using, and threatening to continue to sell and use within the District of Maryland and elsewhere within the United States large quantities of radio receiving apparatus, and that said apparatus employs and embodies the invention and improvements of said Letters Patent No. 1,455,141 and infringes said letters patent; and the said defendants and each of them has further, aided and abetted others to commit similar infringements of said patent.

On information and belief that the said defendants and each of them without license or permission and in violation, infringement and contributory infringement of said Letters Patent No. 1,606,212, contriving to injure plaintiffs and to deprive them of the benefits and advantages which might and otherwise would accrue unto them from said invention after the issue of said letters patent as aforesaid and within six years before the commencement of this suit and prior to the execution of this bill of complaint, did wrongfully and unlawfully sell and use within the District of Maryland and elsewhere within the United States, and are now selling and using and threatening to continue to sell and use within the District of Maryland and elsewhere within the United States large quantities of power amplifiers and that said apparatus employs and embodies the invention and improvements of said Letters Patent No. 1,606,212, and infringes said letters patent; and the defendants and each of them has further, aided and abetted others to commit similar infringements of said patent.

On information and belief that the said defendants and each of them without license or permission and in violation, and infringement and contributory infringement of said letters patent No. 1,635,117, contriving to injure plaintiffs and to deprive them of the benefits and advantages which might and otherwise would accrue unto them from said invention after the issue of said letters patent as aforesaid and within six years before the commencement of this suit and prior to the execution of this bill of complaint, did wrongfully and unlawfully sell and use

within the District of Maryland and elsewhere within the United States, and are now selling and using and threatening to continue to sell and use within the District of Maryland and elsewhere within the United States large quantities of signal receiving systems embodying and employing the invention and improvements of said Letters Patent No. 1,635,117 and infringing said letters patent; and the defendants and each of them, has aided and abetted others to commit similar infringements of said patent.

On information and belief that the defendants herein and each of them has derived and received and will derive and receive from the aforesaid infringement and contributory infringement complained of herein, great gains profits and advantages, but to what amount the plaintiffs are ignorant and cannot set forth; that by reason for the said infringement and contributory infringement the plaintiffs have been and will be deprived and prevented from receiving, if such infringement and contributory infringement are not forthwith restrained by this court, all of the gains and profits to which the plaintiffs are lawfully entitled, and which they would have derived and received, and would now be deriving and receiving, but for the aforesaid infringement and contributory infringement; that by reason of the aforesaid infringement and contributory infringement the plaintiffs have been irreparably injured and have sustained damages and losses thereby; that the aforesaid infringement and contributory infringement has had the effect to and does encourage and induce, aid and abet, others to venture to infringe upon and contribute to the infringement of said letters patent, and unless the aforesaid infringement and contributory infringement are immediately enjoined by a writ of injunction issuing out of this court, further and irreparable injury, loss or damage will be caused to the plaintiffs.

16. That, upon information and belief, the defendants have been duly notified of said letters patent and of its infringement of said letters patent, but nevertheless continue to infringe whereby the defendants have profited and the plaintiffs have been damaged.

The plaintiffs therefore pray:

1. That a subpoena issue out of and under the seal of this court requiring said defendants A. G. Triplett,

R. M. Tripplett, A. Nelson, C. M. Triplett, Jr., and the Baltimore Gaslight Company and each of them to appear and make full, true, direct and perfect answer to the several matters and things set forth and charged in this bill of complaint.

2. That the said defendants and each of them, their servants, agents and employees, be perpetually enjoined and restrained by the decree of this Court from directly or indirectly making or causing to be made, using or causing to be used, leasing or causing to be leased, selling or causing to be sold, advertising or offering for sale, use or lease, or causing to be advertised or offered for sale, use or lease, agreeing or contracting to sell or lease, or causing to be agreed or contracted for sale or lease, supplying or causing to be supplied, installing or causing to be installed, or threatening to make, use, lease, sell, supply or install, or threatening to offer or contract for sale, lease or supply, or disposing of in any manner, any signal receiving systems, radio receiving apparatus, power amplifiers, or other apparatus containing or embodying said inventions and improvements or involving the use of the said inventions and improvements of said letters patent Nos. 1,455,141, 1,606,212 and 1,635,117 or any of them or any substantial, material, or vital part or parts thereof, and from infringing upon or contributing to the infringement of said letters patent in any way whatsoever.

3. That a provisional or preliminary injunction issue against the said defendants and each of them to the same tenor and effect as hereinbefore prayed for in respect to said perpetual injunction.

4. That the said defendants and each of them be ordered and decreed to deliver to the plaintiffs each and all of the said infringing signal receiving systems, radio receiving apparatus, power amplifiers, and/or other apparatus embodying said inventions and improvements and material and vital parts thereof, which it has in its possession or under its control, or that they be destroyed, or that they be delivered into court or be impounded by the court, or such other disposition be made thereof as to the court may seem just and proper.

5. That the said defendants and each of them may be decreed to account to the plaintiffs for all such gains, profits and advantages, as have accrued to or have been earned or received by the said defendants, from the aforesaid infringement, and contributory infringement, and all such gains, profits and advantages as would have accrued to or been earned by the plaintiffs, but for the infringement and contributory infringement and also all damages the plaintiffs have sustained by said infringement and contributory infringement, and that the court will assess the same, or cause them to be assessed under its direction, and will increase the same in its discretion as provided by law.

6. That the said defendants and each of them may be decreed to pay the costs, charges and disbursements of this suit, and that the plaintiffs may have such other and further relief as the premises and the equity of the case may require and to the Court may seem just.

PERCIVAL D. LOWELL,

By DUBILIER CONDENSER CORPORATION,

By MORTON JOYCE,

Treasurer.

FRANCIS W. DUNMORE,

By DUBILIER CONDENSER CORPORATION,

By MORTON JOYCE,

Treasurer.

DUBILIER CONDENSER CORPORATION,

By MORTON JOYCE,

Treasurer.

SEMMES, BOWEN & SEMMES,

Solicitors for Plaintiffs.

CLIFTON V. EDWARDS,

Of Counsel.

State of New York, County of New York, ss:

MORTON JOYCE, being duly sworn, deposes and says that he is Treasurer of the Dubilier Condenser Corporation, one of the plaintiffs named in the foregoing bill of complaint; that he has read the same and knows the contents thereof and that the same is true of his own knowledge except as to the matters therein stated to be alleged on information and belief and as to those matters he believes it to be true; that the reason why this verification is not made by the plaintiff personally is that the said plaintiff is a corporation.

MORTON JOYCE,

Subscribed and sworn to before me this 14 day of August, 1933.

DOROTHY L. DAVIS,
Notary Public.

(Seal.)

MEMORANDUM.

Patent No. 1,455,141—referred to in Paragraph 6 of Bill of Complaint, No. 1,606,212 referred to in Paragraph 8 of Bill of Complaint, and No. 1,635,117, referred to in Paragraph 10 of Bill of Complaint, are here omitted, said patents being incorporated in Volume II—Book of Exhibits, at pages 2-11, 12-23 and 373, respectively.

ANSWER TO BILL OF COMPLAINT.

Filed 21st September, 1933.

(Style of Court and Title Omitted.)

For answer to the bill of complaint herein, or to as much thereof as it is deemed material or necessary to be answered defendants, on information and belief, say:

1. Defendants have no information, save that obtained from the bill of complaint, as to the matters alleged in paragraph 1 thereof and leave plaintiffs to their proof.

2. Defendants deny each and every allegation contained in paragraphs 5, 6, 7, 8, 9 and 10 of the bill of complaint except they admit having seen what purported to be printed copies of United States Letters Patent Nos.

1,455,141, 1,606,212, and 1,635,117 issued, respectively, on May 15, 1923, November 9, 1926, and July 5, 1927.

3. Defendants are without information save that obtained from the bill of complaint, as to the matters alleged in paragraphs 11 and 12 thereof and leave plaintiffs to their proof.

4. Answering paragraph 13 of the bill of complaint defendants admit the matters therein alleged pertaining to the previous litigation of Dubilier Condenser Corporation vs. Radio Corporation of America in the United States District Court for Delaware, and in the United States Circuit Court of Appeals for the Third Circuit, the tenor and effect of the decrees thereof, and the petition to and denial by the Supreme Court of the United States; but deny each and every other allegation of this paragraph except that herein specifically admitted, except as to the matter of disclaimer, as to which defendants are not informed, save by the bill of complaint, and therefore leave plaintiffs to their proof.

5. Defendants are without information as to the matters alleged in paragraph 14 of the bill of complaint, save that obtained therefrom, and therefore leave plaintiffs to their proof.

6. Defendants deny each and every allegation contained in paragraph 15 of the bill of complaint.

7. Defendants deny each and every allegation contained in paragraph 16 of the bill of complaint.

Further answering the bill of complaint, on information and belief, defendants aver—

8. That said Letters Patent, and each thereof, are wholly void and invalid at law for each of the following reasons:

(a) Because the alleged invention thereof is shown in printed publications in the United States and/or countries foreign to the United States before the alleged invention or discovery thereof by the said patentees, or more than two years prior to their applications for Letters Patent therefor as follows:

(1) UNITED STATES PATENTS

Inventor	*Patent No.*	*Date of Issue*
Pridham & Jensen	1,105,924	Aug. 4, 1914
Schoemilch et al.	1,087,892	Feb. 17, 1914
White	1,195,632	Aug. 22, 1916
DeForest	1,201,272	Oct. 17, 1916
Hull	1,251,377	Dec. 25, 1917
Heising	1,432,022	Oct. 17, 1922
Hartley	1,442,430	Jan. 16, 1923
Blattner	1,483,273	Feb. 12, 1924
Blattner	1,493,595	May 13, 1924
Hanson	1,529,306	Mar. 10, 1925
Pupin	1,571,458	Feb. 2, 1926

FOREIGN PATENTS

Country	*Inventory*	*Patent No.*	*Date*
France	Barthelemy	526,506	July 2, 1921
France	Vallette	516,753	Dec. 9, 1920

PUBLICATIONS

Author	*Book*	*Date*	*Page*
E. A. White	Electrical Experimenter	July, 1919	234, 266-268
"	"	Sept., 1919	460
"	"	Apr., 1920	1282
E. E. Bucher	Wireless Experimenter's Manual	1920	274-275
V. H. Brown	Radio News	Aug., 1921	111
J. Swank	"	Sept., 1921	201
M. Moye	Wireless World	Apr. 2, 1921	24
"	"	May 14, 1921	103
"	"	Oct. 1, 1921	427
"	Radio News	June, 1921	863
"	"	Aug., 1921	111
"	Annales de Postes Telegraphes et Telephones	Sept., 1921	396-400
Dr. "P. C."	La T. S. F. Moderne	Apr.-July, 1921	129-135
"	"	Aug., 1921	166-173
"	"	Sept., 1921	214-223
McNicol	Electrical Experimenter	May, 1920	39
Abraham & Bloch	Radio Review, Vol. 1	Nov., 1919	100

(2) As to Letters Patent No. 1,606,212—

PUBLICATIONS

Author	*Book*	*Date*	*Page*
Bucher	Vacuum Tubes in Wireless Communication	1918	100-102
Bront	Wireless Age, Vol. 8	Aug., 1921	31-32
Duvall	Q. S. T.	Apr., 1920	18, 20

and other publications, of which defendants are not at present advised, but beg leave to add hereto by proper amendment to this their answer when such information is obtained.

(b) Because the alleged invention of said Letters Patent, and each thereof, did not constitute patentable invention over the then existing state of the art. To show the then existing state of the art reliance will be had on the publications enumerated in paragraph (a) hereof supplemented by—

UNITED STATES PATENTS

Inventor	*Patent No.*	*Date of Issue*
DeForest	879,523	Feb. 18, 1908
Von Lieben	1,038,910	Sept. 17, 1912
White	1,159,307	Nov. 2, 1915
Alexanderson	1,173,079	Feb. 22, 1916
Lowenstein	1,231,764	July 3, 1917
Langmuir	1,273,627	July 23, 1918
Langmuir	1,282,439	Oct. 22, 1918
Schriven	1,375,739	Apr. 26, 1921
Colpitts	1,388,450	Aug. 23, 1921
White	1,394,056	Oct. 18, 1921
Wilson	1,403,932	Jan. 17, 1922
Alexanderson	1,419,797	June 13, 1922
Mathes	1,426,754	Aug. 22, 1922
Heising	1,445,278	Feb. 13, 1923
Pupin	1,446,769	Feb. 27, 1923
Nicolson	1,459,412	June 19, 1923
Nichols	1,463,432	July 31, 1923
Arnold	1,465,332	Aug. 21, 1923
Robinson	1,587,084	June 1, 1926

FOREIGN PATENTS

Country	*Inventor*	*Patent No.*	*Date*
Great Britain	Marconi & Round	28,413	1913
"	"	6,476	1915
"	Lorenz	148,401	1921
Germany	Siemens-Schuckert-Werke G. M. B. H.	312,044	Apr. 28, 1919
"	Hahn	343,060	Oct. 27, 1921

PUBLICATIONS

Author	*Book*	*Date*	*Page*
Morecroft	Principles of Radio Communication	June, 1921	870-871
Not named	Wireless World, Vol. 8	Apr. 17, 1920	64-65
Robert Shute	"	Nov. 12, 1921	499-500
Not named	Wireless World	Dec., 1919	544-547
Sinclair	Wireless World, Vol. 8	Feb. 19, 1921	798, 806, 807
Scott-Taggert	The Electrician	Apr. 23, 1920	451
Horle	Q. S. T. Vol. 3	July, 1920	12-14
Not named	" " 4	Sept., 1920	8,9,35-36
Bussey	" " 4	June, 1921	17-18
Goldsmith	Wireless Age, Vol. 5	Dec., 1917	228, 234-239
Not named	Wireless Age, Vol. 7	Jan., 1920	43
McAusland	Wireless Age, Vol. 7	June, 1920	13-15
Machson	Wireless Age, Vol. 8	Apr., 1921	25-27
White	Wireless Age, Vol. 8	July, 1921	11-17
Not named	Wireless Age, Vol. 8	Aug., 1921	30-31

Reed	Radio News, Vol. 2	Jan., 1921	447-489
"I want to know"	" " " 2	Feb., 1921	540
Marston	" " " 2	June, 1921	870-871
Lewis	" " " 3	Sept., 1921	195, 254
Felder	" " " 3	Sept., 1921	200, 240, 242
Lynch	Science & Invention	Oct., 1921	536, 537, 575
R. C. A. Ad	"	Nov., 1921	669
Guellemin	La T. S. F. Moderne, Vol. 2	Sept., 1921	230-231

and other publications of which defendants are not at present advised, but beg leave to add hereto by proper amendment to this their answer when information thereof is obtained.

(c) Because the patentees named in said Letters Patent, and each thereof, were not the first inventors of the subject matter thereof, but the same had been previously invented by others. In support of this defense, in addition to the patenteees named in the patents applied for prior to the date of filing of the respective applications which matured into the patents in suit enumerated in paragraphs (a) and (b) hereof reliance will be had upon the following:

J. G. Aceves, whose last known address is Columbia University, New York, N. Y.

E. A. White, whose last known address is % Dartmouth College, Hanover, N. H.

and others, information as to whom defendants are not at present advised but beg leave to add hereto by proper amendment to this their answer when such information is obtained.

(d) Because the alleged invention of said Letters Patent, and each thereof, was in public use and/or on sale before the alleged invention thereof by the said patentees, or more than two years prior to their said applications for Letters Patent as follows:

American Telephone and Telegraph Company, a corporation of New York;
Western Electric Company, Inc., a corporation of New York; and
United States Government,

with respect to which latter reference will be had to well known Army and Navy radio receiving sets identified as Navy S. E. 1405, Navy S. E. 1605, Navy S. E. 1605B, Army B. C. 59A, Army B. C. 8A, Army B. C. 103, Army B. C. 105, Navy C. W. 924, C. W. 926, C. W. 927, and Army S. C. R. 68.

(e) With specific reference to patent No. 1,606,212, because the invention for which the patent issued is for a different invention from that for which application for patent was filed, the matter relating thereto having been unlawfully inserted in the application during its prosecution.

9. Defendants, individually and jointly, specifically deny infringement of said Letters Patent, and each thereof.

Wherefore defendants deny each and every allegation of the bill of complaint herein, except such allegations as have been specifically admitted, and deny that plaintiffs are entitled to the relief prayed for, or to any relief, and therefore pray to be hence dismissed with their costs in this case sustained.

A. G. TRIPLETT, R. M. TRIPLETT,
A. NELSON, C. M. TRIPLETT, JR., and
THE BALTIMORE GAS LIGHT COMPANY,
By SAMUEL E. DARBY, JR.,
Attorney for Defendants.

Dated: New York, N. Y., September 19, 1933.

COOK & MARKELL,
CHAS. MARKELL,
Solicitors for Defendants.

DARBY & DARBY,
SAMUEL E. DARBY, JR.,
Of Counsel.

DEFENDANTS' NOTICE, MOTION TO DISMISS AND AFFIDAVIT IN SUPPORT OF MOTION TO DISMISS.

Filed 26th June, 1934.

(Style of Court and Title Omitted.)

NOTICE.

Sir:

Please Take Notice that on June 12, 1934, the date now set for the trial of the above case, and prior to the opening of said trial, or as soon thereafter as counsel can be heard, a motion will be made before the Sitting Judge of the United States District Court for the District of Maryland, at the Court Room, Federal Building, Baltimore, Maryland, to dismiss the Bill of Complaint herein in so far as it charges infringement of United States Letters Patent No. 1,455,141 and No. 1,635,117.

At the hearing of said motion reference will be made to the affidavit attached hereto.

We hand you herewith copies of the motion and affidavit referred to.

Very respectfully,

DARBY & DARBY,

Attorneys for Defendants.

Dated New York, N. Y.

May 29, 1934.

(Style of Court and Title Omitted.)

MOTION.

Now come the defendants in the above entitled cause and, on the pleadings and the annexed affidavit, move the court to dismiss the Bill of Complaint herein in so far as it charges infringement of United States Patent Nos. 1,455,141 and 1,635,117, owing to the fact that plaintiffs unreasonably neglected and delayed in filing a disclaimer under Title 35, United States Code, Sections 65 and 71, in respect of certain claims of said patents which

had been held invalid in a prior litigation against another defendant.

A. G. TRIPLETT, R. M. TRIPLETT,
A. NELSON, C. M. TRIPLETT, JR., and
THE BALTIMORE GASLIGHT COMPANY,
By DARBY & DARBY,
Attorneys.

Dated, May 29, 1934.

(Style of Court and Title Omitted.)

State of New York, County of New York, ss:

SAMUEL E. DARBY, JR., being first duly sworn, deposes and says as follows:

That he is a member of the firm of Darby & Darby, attorneys for the defendants in the above entitled cause, and is familiar with the issues involved therein.

That the litigation involves a suit in equity brought under the Patent Laws for the alleged infringement by the defendants of United States Letters Patent No. 1,455,141; No. 1,606,212, and No. 1,635,117, issued, respectively, on May 15, 1923, November 9, 1926, and July 5, 1927.

That in connection with the patents in suit and as the Bill of Complaint in paragraph 13 thereof alleges, the plaintiff, Dubilier Condenser Corporation, filed bills of complaint in the United States District Court for the District of Delaware on or about September 20, 1927, against the Radio Corporation of America charging infringement upon certain claims of said Letters Patent involved in the present suit. That on or about August 12, 1929, the said District Court for the District of Delaware entered its decree adjudging claims 3 and 14 of Letters Patent No. 1,455,141 to be valid and infringed, and adjudging claim 9 of said patent No. 1,635,117 to be valid and infringed. That thereafter the said defendant, Radio Corporation of America, perfected an appeal from the said decision to the United States Circuit Court of

Appeals for the Third Circuit, which court reversed the aforementioned decree of the District Court for the District of Delaware and held said claims invalid and directed the said bills of complaint to be dismissed. That the said decree of the District Court held the said patent No. 1,606,212 not to be infringed and no appeal was taken from said decree with respect to said patent No. 1,606,212. That a petition for rehearing was filed in the said Circuit Court of Appeals with respect to the decision of that court upon claim 9 of patent No. 1,635,117, which petition was denied. That thereafter plaintiff filed petitions in the Supreme Court of the United States for writs of certiorari to review said decisions of the Circuit Court of Appeals for the Third Circuit with respect to said patents Nos. 1,455,141 and 1,635,117, and the Supreme Court of the United States denied said petitions on or about October 25, 1932.

That on or about July 8, 1933, eight months and thirteen days after said petition for writ of certiorari was denied, the plaintiffs herein entered disclaimers in the United States Patent Office disclaiming portions of said Letters Patent which were stated to be too broad and which through inadvertence, accident or mistake, had been included in said patents.

That under the principles set forth in the opinion of the United States Supreme Court in Ensten v. Simon Ascher & Co., 282 U. S. 445, 455; 75 L. Ed. 453, illustrated by such decisions as R. Hoe & Company, Inc., et al. vs. Goss Printing Press Company, 31 Fed. (2d) 565, 566 (C. C. A. 2); Radio Condenser Company v. General Instrument Company, 65 F. (2d) 458, 459 (C. C. A. 2); Otis Elevator Company v. Pacific Finance Corporation, 68 Fed. (2d) 664, 670 (C. C. A. 9), and Better Packages, Inc., v. Nashua Package Sealing Company, Inc., decided by the United States District Court for the Southern District of New York (Woolsey, J.), on April 11, 1934 (not reported but copy of opinion attached hereto), it is contended that the plaintiffs herein unreasonably neglected and delayed in filing the disclaimers as alleged in the Bill of Complaint of said claims of patents Nos. 1,455,141 and 1,635,117 in suit, and therefore in view of the provisions of the Patent Laws of the United States, Title 35, United States Code, Sections 65 and 71, the pres-

ent suit cannot be maintained in so far as it is founded on the patents Nos. 1,455,141 and 1,635,117 mentioned, and to that extent must be dismissed.

SAMUEL E. DARBY, JR.

Sworn to and subscribed before
me this 29 day of May, 1934.

ROSE A. BATTERMAN,

Notary Public. (Seal.)

UNITED STATES DISTRICT COURT, SOUTHERN DISTRICT OF NEW YORK.

Better Packages, Inc., Plaintiff,

vs.

Nashua Package Sealing Company, Inc., and Nashua Gummed and Coated Paper Company, Defendants.

OPINION
In Equity
No. 76/213

On motion to dismiss complaint in so far as it charges infringement of United States Patents Nos. 1,194,752 and 1,782,123, owing to the fact that the plaintiff as owner thereof had unreasonably neglected and delayed in filing a disclaimer under Title 35 United States Code, Sections 65 and 71, in respect of certain claims of those patents which had been held invalid in another litigation against another defendant.

Messrs. Emery, Booth, Varney & Whittemore, solicitors for defendants—by L. G. Miller, Esq., of counsel—in support of the motion.

Messrs. Hammond & Littell, solicitors for plaintiff—in opposition thereto.

WOOLSEY, J.:

The motion is in all respects granted.

1. The plaintiff did not avail itself of its right to appeal on or before November 2, 1932, from such part of the interlocutory decree of October 3, 1932, entered in

the case decided by Judge Coleman of Better Packages, Inc., against L. Link & Company, et al., 1 F. Supp. 132, as held invalid certain claims of patents No. 1,194,752 and No. 1,782,123.

I think that under the principles taught in the opinion of the Supreme Court in Ensten v. Simon Ascher & Co., 282 U. S. 445, 455, illustrated by such decisions as R. Hoe & Company, Inc., et al., v. Goss Printing Press Company, 31 F. (2d) 565, 566 (C. C. A. 2); Radio Condenser Company v. General Instrument Company, 65 F. (2d) 458, 459 (C. C. A. 2); and Otis Elevator Company v. Pacific Finance Corporation, 68 F. (2d) 664, 670 (C. C. A. 9), in order to maintain its right thereafter to sue for infringement of the claims of said patents which were held valid, the plaintiff should have filed its disclaimers in the circumstances here shown on or before December 2, 1932, that is, within thirty days at least after its time to appeal from the interlocutory decree of October 3, 1932, had expired, as it did on November 2, 1932. Title 28, United States Code, Sections 227 and 227a.

The plaintiff either should have justified its position as to these patents by securing, on appeal if it could, a reversal of Judge Coleman's ruling holding certain claims invalid, or by disclaimer it should have acquiesced in said ruling as the statute prescribes. For the ambit of a patent right must not be left vague, but must be kept clearly defined that the public may know its right in the face of the patentee's monopoly.

The plaintiff filed its disclaimer in respect of patent No. 1,194,752 on January 24, 1933. This was eighty-three days after the time to appeal from the interlocutory decree above mentioned had expired. In respect of patent No. 1,782,123, it has not filed any disclaimer, consequently, in view of the provisions of the Patent Law of the United States, Title 35, United States Code, Sections 65 and 71, the instant suit cannot be maintained in so far as it is founded on the patents mentioned, and to that extent must be dismissed.

Settle order on notice.

April 11, 1934.

* .....

United States District Judge.

* (Blank on copy attached to original Motion.)

PLAINTIFFS' ANSWERING AFFIDAVIT TO MOTION TO DISMISS.

Filed 13th June, 1934.

IN THE UNITED STATES DISTRICT COURT FOR THE DISTRICT OF MARYLAND.

Percival D. Lowell, Francis W. Dunmore and Dubilier Condenser Corporation, Plaintiffs,

vs.

A. G. Triplett, R. M. Triplett, A. Nelson, C. M. Triplett, Jr., and the Baltimore Gaslight Company, Defendants.

Equity No. 2193.

AFFIDAVIT OF PERCIVAL D. LOWELL AND FRANCIS W. DUNMORE.

State of Maryland, City of Baltimore, ss:

Percival D. Lowell and Francis W. Dunmore, being duly sworn, depose and say as follows:

We are plaintiffs in the above case and are joint inventors of United States Letters Patent No. 1455141 and 1606212, and the said Dunmore is the inventor of United States Patent No. 1635117, all of which patents are involved in the above case.

Shortly before the suit of the Dubilier Condenser Corporation against the Radio Corporation, involving the above patents, was tried before his Honor, Judge Morris, in the District of Delaware, interferences had been declared in the United States Patent Office by various claimants alleging prior inventorship with regard to the said patents as follows:

Michael I. Pupin, whose application for patent was owned by the Westinghouse Electric & Manufacturing Company; Robert D. Duncan, Jr., whose application was owned by Wired Radio, Inc., a subsidiary of the North American Company, and Albert S. Blatterman had filed

applications for patent, and all three of these applications were placed in interference with the above patent 1455141, the issue of the interference being claims 1, 2, 15, 16 and 18 of said Lowell and Dunmore patent 1445141, and the said interference being numbered 53154.

The said application of the said Robert D. Duncan, Jr. was also placed in interference with the said patent 1455141 and the issue of the said interference was claims 2, 20 and 21 of the said Lowell and Dunmore patent 1455141, the interference being numbered 53155.

The applications of the said Michael I. Pupin, and the said Albert S. Blatterman were also placed in interference with the said patent 1455141, the issue of the said interference being claims 2, 16 and 1 of the said Lowell and Dunmore patent 1455141, and the interference being numbered 51704.

The said application of Albert S. Blatterman was also placed in interference with the said patent 1455141 and the issue of the interference was claims 1, 2, 15, 18 and 19 of the said patent 1455141, the number of the interference being 51204.

During all of the time the said suit of the Dubilier Condenser Corporation against the Radio Corporation was being tried and heard on appeal, said interferences were proceeding. The contestants were financially able, and testimony was taken on behalf of the several parties. After the interferences were decided by the Patent Office tribunals in favor of Lowell and Dunmore, the said Blatterman filed a bill in equity under Section 4915 in the Supreme Court of the District of Columbia, seeking to review the decisions of the Patent Office and to have the invention in controversy awarded to said Blatterman. The said Wired Radio, Inc., and Robert D. Duncan, Jr., also filed a bill in equity in the Supreme Court of the District of Columbia against said Lowell and Dunmore, the said Blatterman and the said Westinghouse Electric & Manufacturing Company, also seeking to overthrow the decisions of the Patent Office, and seeking to have an award of priority made in favor of the said Duncan. These actions were pending and not disposed of until an order was made on October 23, 1933, dismissing the said suit of the said Blatterman, and order was made on

November 7, 1933, dismissing the said suit of the Wired Radio, Inc., and Robert D. Duncan, Jr.

The opinion of Judge Morris in the District Court for the District of Delaware, upholding patents 1455141 and 1635117, was filed on August 12, 1929. In April, 1930, the United States filed bills in equity against deponents, the Dubilier Condenser Corporation and the Morkrum Company, a licensee under the patents in suit, alleging in substance that the patents belonging to the United States and praying that a decree be entered adjudging that the United States is the owner of the said inventions; that the defendants hold the same as trustees for the benefit of the United States; that the defendants be directed to assign and convey to the United States all his or its right, title and interest in and to the said inventions; that the defendants be compelled "to account and to pay over to the plaintiff all monies received by him in connection with or arising out of the said invention and the said letters patent"; and that the plaintiff have such other and further relief as to the court may seem just, together with the costs of the action.

The suits against the affiant Percival D. Lowell were filed on April 19, 1930, in the United States District Court for the Eastern District of New York.

The suits against the affiant Francis W. Dunmore were filed at about the same time in the Supreme Court for the District of Columbia.

The suits against the Dubilier Condenser Corporation were filed in the District of Delaware on April 22, 1930.

The suits against the Morkrum Company were filed at about the same time in the District of Maine.

The suits against the Dubilier Condenser Corporation were tried before his Honor, Judge Nields, in the District of Delaware. After decision in favor of the defendants an appeal was taken by the Government to the Circuit Court of Appeals for the 3rd Circuit. These appeals were decided by the Circuit Court of Appeals for the 3rd Circuit some time after the filing of the opinions of that court with respect to the validity of patents 1455141 and 1635117. The decision of the Circuit Court of Appeals

being in favor of defendants, the Government applied for and was granted a petition for writ of certiorari and the case was heard by the Supreme Court at the October Term, 1932. On April 10, 1933, the Supreme Court by a divided court affirmed the opinion of the Circuit Court of Appeals and on May 8, 1933, amended the opinion.

We were advised by counsel that the decision of the Supreme Court did not prevent the Government from bringing to trial the suits brought against us as individuals and attempting to show facts other than those brought out in the Dubilier Condenser Corporation case, and further that counsel for the Department of Justice had stated that the matter of further proceedings was under consideration by the Department. However, on June 8, 1933, upon motion of the Government, the suits against the plaintiff-affiant Dunmore in the Supreme Court of the District of Columbia were dismissed by order of court, and on July 3, 1933, upon motion of counsel for the Government, the suits against the plaintiff-affiant Lowell in the Eastern District of New York were also dismissed.

We attach hereto in support of the foregoing allegations the following documents.

Exhibit A is a copy of the decisions of the Board of Appeals of the Patent Office, affirming the decisions of the Examiner of Interferences awarding priority of invention to affiants.

Exhibit B—Printed copies of the complaints and answers in the aforesaid suits of the United States against the Dubilier Condenser Corporation, Morkrum Company, Percival D. Lowell and Francis W. Dunmore, in which the Government sought to obtain title to the invention.

Exhibit C—Certified copy of the motions for dismissal and orders of dismissal in the Supreme Court for the District of Columbia in the aforesaid suits of United States vs. Francis W. Dunmore, Albert S. Blatterman vs. Percival D. Lowell and Francis W. Dunmore and Wired Radio, Inc., and Robert D. Duncan, Jr., vs. Percival D. Lowell, Francis W. Dunmore, Albert S. Blatterman and Westinghouse Electric & Manufacturing Company.

Exhibit D—Certified copy of motion and order of dismissal entered July 3, 1933, in the aforesaid suit of the

United States vs. Percival D. Lowell in the Eastern District of New York.

Exhibit E—Certified copy of motion for dismissal and order of dismissal of July 3, 1933, in the above mentioned suit of United States vs. Percival D. Lowell, No. 4935 in the Eastern District of New York.

Exhibit F—Copies of Bills of Complaint and Answers in the Blatterman and Wired Radio 4915 suits.

A short time after the decision of the Circuit Court of Appeals for the 3rd Circuit respecting the validity of claims 3 and 14 of the said patent 1455141 and claim 9 of the said patent 1635117 we inquired of counsel as to what steps could be taken toward reviewing the decision of the Circuit Court of Appeals. The cases having been consolidated for trial, a petition for certiorari was taken to the Supreme Court of the United States and denied. Thereafter the question arose as to proceedings in another jurisdiction. Counsel advised that any further proceedings should await the outcome of the interference proceedings, and especially await the outcome of the question of title then pending in the Supreme Court of the United States. The advisability of filing a disclaimer was also discussed. Counsel advised that in their opinion the opinion of the Circuit Court of Appeals respecting validity was based upon an interpretation of the claims which in their opinion did not represent the same thing or substantial equivalent of what was shown, described and claimed in the patent, and that the matter was largely, if not entirely, a matter of interpretation rather than disclaimer, since nothing in the prior right anticipated anything that would be disclaimed. After consideration it was decided that the placing on record of the disclaimers which were subsequently filed, would at least operate as a declaration of the patentees' interpretation of the patents, and would operate to prevent a broader construction of these claims than would be comprehended by what was shown and described or the equivalent thereof. Counsel also advised that should these disclaimers be filed before the dismissal of the suits by the Government, and should the Government obtain title to the patents, the Government might claim that the filing of such disclaimers operated to impair or destroy the usefulness of the patents, and in consequence might claim that affiants were liable in damages to the Government therefor.

In consequence of the foregoing advice it was deemed advisable to withhold the filing of the disclaimers, at least until the dismissal of the suits against your affiants Lowell and Dunmore. As above stated, this litigation against your affiants was ended by the dismissal of the suit against your affiant Lowell on July 3, 1933, and within a few days thereafter, i. e. on July 8, 1933, the disclaimers were filed.

PERCIVAL D. LOWELL,
FRANCIS W. DUNMORE,

Subscribed and sworn to this 13th day of June, 1934.

HELEN G. JAMES,
Notary Public.

(Seal)

MEMORANDUM.

Exhibits A, B, C, D, E and F attached to foregoing affidavit are here omitted and will be found in Volume II Book of Exhibits at pages 24, 48, 132, 144, 146 and 148, respectively.

AGREED STATEMENT OF EVIDENCE IN NARRATIVE FORM AND APPROVAL OF COURT.

Filed 12th December, 1934.

IN THE UNITED STATES DISTRICT COURT FOR THE DISTRICT OF MARYLAND.

Percival D. Lowell, Francis W. Dunmore and Dubilier Condenser Corporation, Plaintiffs, vs. A. G. Triplett, R. M. Triplett, A. Nelson, C. M. Triplett, Jr., and The Baltimore Gaslight Company, Defendants.	Equity No. 2193.

Baltimore, Maryland, June 13, 1934.

The above-entitled cause came on to be heard before his Honor Judge William C. Coleman on Wednesday, June 13, 1934, at 10:30 o'clock A. M.

Appearances:

Clifton V. Edwards, Esq. and John B. Brady, Esq. and Messrs. Semmes, Bowen & Semmes (by Gaylord Lee Clark, Esq.), on behalf of the plaintiffs.

Messrs. Darby & Darby (by Samuel E. Darby, Jr., Esq.) and Messrs. Cook & Markell (by Charles Markell, Esq.) on behalf of defendants.

The Court: I am sorry, gentlemen, I have kept you waiting, but this is the beginning of a new term, and I had to take up some matters with a new jury.

I would like to go ahead now, Mr. Clark.

Mr. Darby: If the Court please, I appear for the defendants; and by arrangement of counsel we are starting the trial with a motion to dismiss as to two of the patents. Should I proceed with the motion, your Honor?

The Court: Very well.

Mr. Darby: May I hand to the Court the motion papers and a brief memorandum of the law?

(Papers handed to the Court.)

Mr. Darby (Continuing): The facts necessary to be known by the Court on the matter of the motion are briefly these; This is a suit charging infringement of three patents, which, for convenience, I will call patents Nos. 1, 2 and 3. The patents have previously been in litigation; in the Third Circuit, three separate suits, one on each patent, were brought in the Delaware District Court before Judge Morris. As to Patent No. 1 and Patent No. 2, Judge Morris found the patents to be valid and infringed; as to Patent No. 3, Judge Morris found the patent to be not infringed; and his opinion, to which reference will be made later, indicates that he was of sufficient impression, if not to make his decision turn upon it, that the patent was invalid.

The plaintiffs, the owners of the patent, acquiesced in Judge Morris's ruling as to Patent No. 3, non-infringement. As to the other two patents, the unsuccessful defendant, the Radio Corporation of America, appealed to the Court of Appeals for the Third Circuit. The Court of Appeals, in the opinion by Judge Wooley, reversed

Judge Morris and held the patents Nos. 1 and 2 to be invalid. A rehearing was applied for and denied. Then a petition for Writ of Certiorari was filed in the Supreme Court and denied in October, 1932. The Patent owners waited for approximately eight and a half months thereafter to file a disclaimer for the invalid subject-matter—eight and a half months. Namely, on July 8, 1933.

Under the decision of the Ensten case, in the Supreme Court, in the Hoe case, in the Court of Appeals for the Second Circuit, and in a case which is reported in the current advance sheets of the Federal Supplement, the rule is under the Ensten case that the disclaimer, after all possible appeals have been exhausted, should be filed not later than thirty days to come within the disclaimer statutes as acting within a reasonable period of time. There are two decisions squarely on the point. And, therefore, we move to dismiss as to Patents Nos. 1 and 2, on the ground that the disclaimer has not been filed within a reasonable length of time, which is a condition precedent to a patent owner taking advantage of the remedial effect of the disclaimer statutes.

Mr. Edwards: If your Honor please, the disclaimer statutes do not fix any distinct period of time within which a disclaimer must be filed. The statute says that it must be filed within a reasonable time. And as stated in the Ensten case, which was quoted by your Honor in the recent case of the American Stainless Steel Company against the Rustless Iron Company, your Honor, quoting from the Ensten case, quoted this:

"The question of unreasonable delay is a question for the Court, upon the facts as found, either by its own investigation or the verdict of a jury. Delay begins whenever the patentee becomes aware that he has claimed more than he has invented or described."

Now, as to whether the patentees in this case have been guilty of any reasonable delay, there are several circumstances to be taken into consideration. I might mention, first, in the cases cited by Mr. Darby I do not think they go so far as to say that under the Ensten case, or any case, there is a fixed time limitation. In the Ensten case a suit had been brought and a decree entered, holding certain claims invalid, and no appeal was taken from that decision. The patentee waited some four years be-

fore filing a disclaimer of those invalid claims. In the Radio Condenser Company against the General Instrument Corporation, cited in Mr. Darby's motion, the suit was in the Southern District of New York on certain patents to a party named Cohen. The Patent Office had held an Interference contest, and decided that Cohen was not the inventor. No appeal was taken from that decision; and the parties waited about four years. And so the Court held that under those circumstances four years was an unreasonable delay.

In the case of Hoe against the Goss Printing Press Company, certain claims were for the first time held to be invalid by the Circuit Court of Appeals for the Second Circuit. Plaintiff wanted to proceed on certain other claims which were held to be valid. The Court of Appeals decided that its mandate should provide that unless plaintiff filed a petition for certiorari, that the decree would be that his bill would be dismissed unless he filed a disclaimer within thirty days. That may or may not have been harsh or unreasonable. But in that circuit that was the end of the litigation. The Circuit Court of Appeals decision there would become final, and so far as that Circuit was concerned nothing more could be done; and plaintiff, if it desired to proceed in that circuit, was naturally required to file a disclaimer. The plaintiff was not obliged to file a disclaimer. It could have proceeded elsewhere and waived its accounting.

The case referred to by Mr. Darby in Judge Woolsey's opinion is of the same character. In a suit in the District Court in the Southern District of New York, certain claims were held invalid, and no appeal was taken. Thereafter another suit was brought in the same court on the patent, and Judge Woolsey held that the delay of eighty-some odd days in that case in filing a disclaimer was unreasonable. Now, the facts are not at all clear in the opinion as to just why the Judge thought eighty-two days was an unreasonable delay; but the subject-matter of the patent obviously was of a very simple nature, so that the plaintiff would not have any difficulty in judging what its future course should be.

That there is no arbitrary limit is indicated by numerous decisions of the Supreme Court and others, one in the Mineral Separation case, where a delay of some three years was not considered unreasonable.

There was another one of these Stainless Steel cases, where, if I remember correctly, the disclaimer was filed some ten years after the granting of the patent, and was still held not to be unreasonable.

Another case in the Sixth Circuit, which went to the Supreme Court, was where the disclaimer had been held to be about four years, not unreasonable.

The Supreme Court, although invalidating the patents on other grounds, made no criticism of the matter of delay.

Now, in the case at Bar, the situation was not at all easy for the patentees to determine. In the first place, the subject-matter was quite difficult and complex. The claims of the patents in suit were directed broadly to means for eliminating hum in these alternating current operated radio sets. The plaintiffs were the inventors of the first radio receiving set to be operated from household alternating current. The invention has gone into very wide use. As I said, the claims were directed to a radio receiver, having a radio frequency portion, a detector portion, an amplifier portion means for eliminating hum in the several sections. Well, now, the specification and claims show very definite means for eliminating hum. We contended in the Third Circuit that the three claims of the patents there involved should be construed to mean, under established rules, that the word "means" means the same thing, or the equivalent of what was shown in the patent. Judge Wooley in his opinion read the claims literally, and said that you have hum eliminating means in the three sections, and I do not see when you separate them but what they operate in the same way, and, therefore, I think the claims constitute a mere aggregation and not a patentable invention. There was no anticipation of the claims, and the Court did not hold that any of the claims were anticipated. It was purely a matter of so construing the claims, the word "means", as to include any kind of means, and then held that in the view of the Court the claims were for an aggregation.

In the lower Court Judge Morris had taken the opposite view, and had construed the claims with reference to what was shown in the patent, and had found the patents to be valid and infringed.

Now, strictly speaking, I did not think, and I do not think now that any disclaimer actually was necessary. The disclaimers in these cases do not disclaim the claims which were held invalid. They do not disclaim claims 3, 14 and 9, for example. Nothing in those disclaimers would avoid any prior art that would otherwise anticipate; they merely place on record the patentees' declaration of their understanding of what the word "means" does mean. And in that sense I thought, and I still think, that it is a debatable question whether any disclaimer actually is necessary at all or not; but by way of precaution it was finally deemed desirable to file those disclaimers.

Now, as to why they were not fied earlier, there were other reasons in addition to the complexity of the subject-matter. One was that shortly before the trial in the District Court, the Patent Office instituted four different interference proceedings with the main patent in suit. One of these contestants was Professor Pupin, whose invention was owned by the Westinghouse Electric & Manufacturing Company. Another one was by Mr. Duncan, whose invention was owned by Wired Radio, a subsidiary of a large company; another by a man named Blatterman; and another by an inventor whose invention was owned by the Hazletine Company. Those interferences continued throughout all the time the suits were pending. And after the decisions in the Patent Office the plaintiffs filed bills under Section 4915 in the Supreme Court of the District of Columbia; and those cases were not terminated until about October of 1933, after the filing of the disclaimer.

Then, worse than all, immediately—not immediately, but after Judge Morris filed his opinion upholding the patents, which was about August, 1929, the Government filed bills of complaint in April of 1930, one against the Inventor Lowell in the Eastern District of New York and in the District of Columbia against the inventor Dunmore; another in the District of Delaware against the Dubilier Condenser Company, the exclusive licensee; and another in the District of Maine against another licensee. The Government alleged that the title to the patents belonged to the Government; and in their prayers they asked that the defendants be decreed to be holding the patents as trustees for

the Government, and that they be required to account and pay over to the Government any properties, damages or moneys received of any nature by reason of the holding of the title of the patents by the defendant.

That case went to trial in the District of Delaware, and was decided before the cases were decided in the Circuit Court of Appeals. The decision in the District Court was in favor of the patentees, the plaintiffs here, and the Government took an appeal to the Circuit Court of Appeals of the Third Circuit. That Court affirmed the lower court in a decision filed some time after the decision regarding the validity and infringement.

Thereupon, the Government petitioned for and was granted a Writ of Certiorari, certifying the cases to the Supreme Court. The Supreme Court, by a divided court, decided the cases on April 10, 1933. On May 3rd they revised the opinion by striking out a certain portion. There was a period during which the Government had indicated that it intended to retry the questions in the suits against the individual defendants. The suit that went to the Supreme Court was only the suit against the Dubilier Condenser Company, and not the suit against the individual defendants. Well, finally, the Government decided not to press those suits. One of them was dismissed in June of 1933, and the other, the last one, against Mr. Lowell, was dismissed on July 3, 1933; and these disclaimers were filed on July 8, 1933.

Now, during that period, if these plaintiffs had filed disclaimers, and if the decision in the Supreme Court had gone against them, they were liable to be called to account to the Government for either damaging or destroying the property of the Government by reason of the disclaimers. And, therefore, in view of all the circumstances, we respectfully submit that if any disclaimer is necessary at all with respect to these two patents, that the plaintiffs were amply justified in waiting for the period that they did after the decisions of the Supreme Court, to wait for the dismissal. The Supreme Court decisions, as I say, were April 10, 1933, a period of about four months; and the actual decision was July 3rd; and up to that time these plaintiffs were in an uncertain state, first, as to whether anything was required or not, and second, whether these other inventors would be held to be

prior in date, and third, whether the Government would take the title away, and if it did take the title away, whether it would call them to account for any actions done in the meantime. I respectfully submit that under all the circumstances that was a very reasonable delay, even if any disclaimer is required.

I also suggest—and the disclaimer applies to only patents—the facts, the subject matter of the patents, the character of the patents also bears very largely on the question of whether there was an undue delay, and since we have one patent to proceed with anyway, that the proper procedure would be to allow the plaintiffs to make their record and let this question stand over until the whole record is before your Honor, in view of all the circumstances, to decide whether a disclaimer should have been filed or not, and if so, whether there was any unusual delay. That practice is what I think is the usual practice, as I gather from the various records.

I will file an affidavit of the two patentees, setting forth the circumstances that I have just related, and also a memorandum regarding the cases.

The Court: I am not quite sure that I followed all the facts. I would like to ask you to rehearse that again. Now, as I understand it, as set forth by Mr. Darby, both in his statement and in his brief, the Circuit Court of Appeals for the Third Circuit declared the two claims invalid in the two patents, and then in the Supreme Court a review was denied in October, 1932. Now, I did not quite follow everything you said in regard to the other litigation.

Mr. Edwards: Now, in October, 1932, there were still pending four interference contests, as represented by bills of complaint filed in the District of Columbia to review the proceeding of the Patent Office, in which these adverse claimants alleged that they were entitled to the patent. There was also pending before the Supreme Court the record awaiting argument in the suit of the Government against the Dubilier Condenser Company, which bill had been filed in Delaware. The cases against Lowell, Dunmore and the Morkrum Company in Maine were standing by without trial. That was the situation in October. The plaintiffs at that time considered the matter of further procedure. Obviously there was no

use proceeding in the Third Circuit, because that Court of Appeals had expressed its view. Naturally we preferred to exercise our right to go to another jurisdiction to make up our record and to submit the whole case to the Supreme Court, or the final court, on the record, not only with regard to these claims, but the other claims of the patents, which had not been in issue in that controversy.

Now, as to whether that disclaimer was to be filed, that, as I say, invited some controversy and some argument; but that continued until the decision of the Supreme Court in April—April 10, 1933. Now, at the time of that decision, the bills of complaint under Section 4915, by these rival inventors, were still pending in the Supreme Court of the District of Columbia. Also the bills of complaint by the Government against the individual defendants Dunmore, Lowell and the Morkrum Company were still undisposed of; and for a period of about a month the Department of Justice indicated that it proposed to bring on for trial one or the other of those suits, preferably the one against Dunmore, in the District of Columbia, in order to make a proper record for the Government. That occupied a period of nearly a month. In June the Government indicated that it would not contest the title; and then in the latter part of June dismissed the suit against Dunmore; and July 3rd dismissed the suit against Lowell. And by that time the question of title was reasonably safe, for it had been disposed of; and then for the first time the plaintiffs were in a position where they could file a disclaimer without subjecting themselves to possible suit for damages or claim for damages in accounting proceedings by the Government. After that these rival claimants, considering that the matter was more or less hopeless, gave up, and they dismissed their suit.

The Court: I do not quite see what that has got to do directly with the question in this case. It is rather involved, but I do not quite follow you. The time may not have been too long; but what has that got to do with the attempt to disclaim after the Third Circuit had gotten through with the matter, and why go further?

Mr. Edwards: Well, we could go further, your Honor. We were not bound by that decision in the Third Circuit

Court of Appeals. We had a perfect right to go further in another jurisdiction; and nothing in the Ensten case——

The Court: That is true.

Mr. Edwards: —or any of the others required us to accept that decision. Nothing barred us from going elsewhere. Had we desired to go further, I quite agree that we would have been obliged to make our election very quickly, very promptly; and whether eighty days would have been unreasonable or not, in view of the subject matter, and in view of the questionable title, and so forth, would, I think, have been for the Court to decide whether the delay was unreasonable.

Now, here we are not in the Third Circuit; we are here in another jurisdiction. We meet at the outset the very question of whether any disclaimer is necessary at all. If no disclaimer is necessary, the situation is precisely as that said by the Supreme Court in the Carnegie Steel Company, namely, that the disclaimer can do no harm. A disclaimer is necessary only where some one has claimed more than he is entitled to. Now, no art anticipated these claims. No Court decision has held that these claims were anticipated. The Court in the Third Circuit, the Court of Appeals did express its opinion to the effect that the claims amounted to no more than aggregation.

But not desiring to accept that as final, we next contemplated proceeding elsewhere. If we were required to file a disclaimer, then comes up the question of unreasonable delay. And I respectfully submit that a delay of 82 days, in the face of the difficult subject-matter, and an impending series of suits by the United States to acquire title to the patent was ample justification for the plaintiffs to wait that length of time before they actually filed these disclaimers. Just as soon as the title was cleared up they did file the disclaimers, within five days.

The Court: Can the matter be heard satisfactorily by proceeding with the one patent that is not involved in this bill for dismissal, and then reserving the question as to the others?

Mr. Edwards: Well, if we do that, it will be done, I think, in a very unsatisfactory way.

The Court: Well, I did not mean not to hear it, but could I reserve my decision on this question and proceed with satisfaction to both parties in developing the proof as to the third patent, and then deciding the other question after this procedure?

Mr. Edwards: It would be just about as easy to develop all of the proofs at once. These three patents all relate to the same general subject matter; namely, how to make a radio receiving apparatus which will operate on alternating current such as we have in lighting circuits, household lighting circuits. The first patent is the broad patent.

The Court: Now, when you say the first, you mean one of the two that were involved in the suit in the Third Circuit?

Mr. Edwards: Yes. Now, the decision in the other litigation involved two claims of that patent. Here there are six or eight other claims in issue. In showing the history of the other two inventions, it is what the patentees did with regard to the first two inventions. Therefore, when they show the later invention, they really show all of them all at once. And if I may suggest, it would seem to be, as a practical matter, that we could easily put in our proofs on all three patents just about as quickly as one, and then the whole matter could be determined in the light of the facts as they appear.

The Court: Mr. Darby, have you anything else to say?

Mr. Darby: Your Honor, may I say just a few words in reply? I first suggest that this question of litigation involving the title of the patent has nothing whatsoever to do with the question of disclaimer. The one who professes title and who has title is the one who is charged with the responsibility of taking advantage of the Disclaimer Statute, if it is to be taken advantage of. Likewise, Mr. Edwards made reference to a pending interference in which the patent was involved. That interference involved only one of the patents, not both of them; and it did not involve any of the claims of that patent which had been held to be invalid. Now, the law is very clearly established that one to take advantage of the benefits of the disclaimer statute to disclaim what has been held to

be invalid—and it is immaterial whether that invalidity is because of anticipation, aggregation or of something else—is charged with the responsibility of doing it within a reasonable length of time, promptly, after it has been called to his attention, the patent owner's attention, that his patent contains more than he is entitled to. Now, that was called, under the authorities, expressly to the attention of the plaintiff in this case who has title, and this claim to title had never been disturbed when the Supreme Court denied the petition for writ of certiorari; and there is no excuse, and there can be no excuse for their delaying to file disclaimer for eight and a half months thereafter.

The Court of Appeals in the Second Circuit in the Hoe case—and Mr. Markell calls my attention to page 8 of my memorandum, that it is incorrectly cited, and it should be 31 Fed. 2nd instead of 31 Fed.—the Court of Appeals there set a maximum of thirty days after the denial by the Supreme Court of an application for writ of certiorari. Here the plaintiffs waited eight and a half months.

This current decision of Judge Woolsey in the Southern District of New York in the Better Package case is now reported in the Federal Supplement. It was not at the time the motion was brought, and plaintiff was served; and, therefore, your Honor will find a copy attached to the moving papers.

Likewise it adheres to the position that thirty days is the limit of time within which action must be taken. And when Mr. Edwards makes the amazing statement that he is not sure whether they need a disclaimer raises another point, it is tantamount to the admission that there was no disclaimer, was no adequate disclaimer disclaiming these invalid claims, which alone invalidates the patent under the law. It is, of course, quite obvious that if we are to go to trial on three patents, two of which are under the authorities of the Supreme Court, invalid, it is going to consume considerably more time than if we go to trial on one patent; but I gather from Mr. Edwards' argument that he predicates his hope to succeed on this motion on the proposition that he had another alternative; namely, he could file a suit in another jurisdiction on the same patent, even on those invalid claims, without a

disclaimer. That is not the fact. That is the very proposition that has been presented in each one of these decisions which pass on the question of a reasonable time within which to file a disclaimer, because that is one that logically suggests itself to the advocate: Have I exceeded my reasonable time if I can sue somebody else? In one of these cases they had actually sued somebody else in another jurisdiction. There is a suit pending. And the courts say that is no excuse.

The Court: Which case is that?

Mr. Darby: I think it is the Hoe case.

The Court: Which case?

Mr. Darby: The Hoe case. But that same argument is presented in almost every one of them. I know it was an argument that was presented in the Better Package cases. But Judge Woolsey does not refer to it.

In the Hoe case in 31 Fed. 2nd, 565, and in the Radio Condenser case, I think it is alleged in an argument that is there made, and I know it likewise is an argument that was made in the Otis Elevator case, decided by Judge Mack, who was sitting in the Court of Appeals for the Ninth Circuit at the time he rendered the decision in that case. So that same contention has been made every time this question has been raised. In other words, if I accept Mr. Edwards' contention, he is coming to this Court, inviting this Court to disagree with the Court of Appeals of the Third Circuit on identically the same subject matter, the same claims that were held to be there invalid.

Now, it is true that there are additional claims in this case which were not before the Court of Appeals; but they are all directed to the same subject matter.

Likewise, the reason why I told your Honor that our side of the case would not take over an hour is because of the fact that we have stipulated that the record before the Court of Appeals in the Third Circuit, or the record before the District Court, as reduced to narrative form for the Court of Appeals in the Third Circuit, shall constitute the record here; so that Mr. Edwards is free to adduce additional testimony in addition to that record if he wants to; but his whole case boils down to the propo-

sition of asking this Court, or inviting this Court, to disagree with the Court of Appeals in the Third Circuit on that same record. And, of course, if it would be simplified by eliminating two major patents, why, we inevitably save an enormous amount of time.

Mr. Edwards: May it please your Honor, there is an element in all of the cases referred to by Mr. Darby that is not present here, and that is, in all of these cases the patentee had either failed to take an appeal, and thereafter waited a long time, or they were cases like the Hoe case and this Better Package case, where the plaintiff desired to proceed in the same jurisdiction.

Now, in the Hoe case the Circuit Court of Appeals there merely said, If you want to proceed further in this District you must file a disclaimer here within thirty days. The plaintiff was not obliged to file that disclaimer.

Now, in the Better Packages case the plaintiff had failed to take appeal, thereby accepting it as final. Now, in the case at bar there never was such an acceptance by these patentees. There never was a period of time during which they became aware in the sense of the statute that is recognized, that they had claimed too much. Are they to be shut off from showing, not as Mr. Darby suggests, upon this same record—we merely stipulate that either party may use any part of the record in the earlier case here—but we propose to show here that Judge Woolley was entirely wrong in saying that the action of the hum-eliminating means in each of the three parts of the instrument is the same. We propose to show and demonstrate that there is an actual cooperative combination, and that in the second patent that Judge Woolley was wrong in assuming that those filters delivered one hundred per cent pure direct current to the tubes. Are these inventors who made what, I submit, is one of the really great inventions in the radio art, to be deprived of their right to show the facts, to bring out the facts, merely because for a period of eighty-two days, during a period of uncertainty, during a period when the title was still clouded, and where if they filed anything, they were in all probabilities subjecting themselves to penalties—is that to be a technical excuse for depriving them of their right to show a real invention? I respectfully submit

that nothing in this case justifies any holding of unreasonable delay, and nothing in any of the other cases fixes any thirty days' limit as the time. It is the statute that covers it; and the statute says reasonable delay; and the Supreme Court in the Ensten case says that is to be determined upon all the facts in the case.

The Court: I would like to stop here to read the Ensten case again, gentlemen.

(Case read by the Court).

Mr. Darby: May I ask your Honor on this point that Mr. Edwards raised of the proposition arising in the same Circuit where the invalidation occurred? I call your Honor's attention to the Ensten case. The invalidation occurred in Ohio, but the decision was rendered in a case where the certiorari was directed to the Court of Appeals of the Second Circuit. In the Radio Condenser case the patent was issued and the claim was held invalid in an interference proceeding in the Patent Office, and nevertheless the rule applied; and on this contention that they have the right to sue in different circuits, may I read or ask your Honor to read the per curiam opinion. Would you rather have me read it?

The Court: Go ahead.

Mr. Darby: It is the per curiam opinion of the Court of Appeals in the Hoe case.

"The plaintiff at bar goes further, however, arguing that, even after denial of an application for certiorari, the patentee should not be obliged to disclaim. It argues that the Circuit Court of Appeals of another circuit might disagree with our ruling, and the Supreme Court would then take the case on certiorari and might declare the claims valid. A disclaimer would merely destroy this right, though the defendant is protected forever by its decree, and really has no interest in the disclaimer at all. While we acknowledge the difficulty and the possibility, it appears to us that so to extend the patentee's time might result in avoiding the statute altogether. The patentee may not sue again, or, if he does, the result may not be the same. It does not follow because two Circuit Courts of Appeal have held the same way, that a third will not disagree. Must the patentee disclaim at the conclusion of the second suit, or may he wait until all nine

Circuits have passed upon his claims? The question is at best of seasonable action, and in practice there must be some end, short of exhausting all conceivable remedies. When the patent has once passed through all the courts then available, the statute should have its effect; else the putatively invalid claims may remain as scarecrows, preserved against the bare possibility that at some future time they may come to life.

"The mandate will therefore be recalled and amended, so as to require the plaintiff to file a disclaimer within thirty days after the time expires within which to petition for certiorari or, if it does so petition, then within thirty days after denial, if it is denied, or affirmance of the decree, if it is granted, and the decree is affirmed."

The Court: Which case is that?

Mr. Darby: That is the Hoe case, Hoe vs. Goss Printing Press Company, by the Circuit Court of Appeals for the Second Circuit, in a per curiam opinion.

The Court: Let me see that.

(Handed to the Court.)

Mr. Darby: What I read to your Honor was under paragraph marked 2.

Mr. Edwards: May I say, your Honor, with regard to the Hoe case, that I submit that that does not have any bearing here, because that related only to the question of how far a Court of Appeals would permit a patentee to delay before filing a disclaimer and proceeding in that circuit. Nothing in that opinion prevented the plaintiff from proceeding in another circuit, to contest the ruling of the Second Circuit. The Second Circuit Court of Appeals merely declined to let action stay indefinitely to allow the plaintiff to contest his patent in other jurisdictions.

And may I also suggest, that all that Mr. Darby's motion comes to is the question of whether or not we must accept the ruling of the Circuit Court of Appeals within thirty days, or whether we have the right to proceed elsewhere. Have we the right to bring a suit on these patents in another jurisdiction if we delay more than thirty days, regardless of whether we find a defendant who is

infringing or against whom we can bring a case. His whole argument, I submit, is addressed to the point that there is a fixed time, say a thirty day limit, within which a plaintiff must proceed if he wants to proceed in another jurisdiction; and the whole effort here is merely to force the plaintiff to accept the decision of the Third Circuit and to cut the plaintiff off from proceeding in another circuit.

The Court: After examining the authorities and briefs, I am disposed to find that there has not been an unreasonable delay in the disclaimers. Of course, that is always a question of fact, and it is possible to read a number of cases and take their language in whole cloth in making them prima facie fit the facts, in the case before us. It seems to me that a reasonable interpretation of the law, and what the Supreme Court has said in construing the law, should lead to the conclusion that the plaintiffs should be allowed to go ahead at this time with respect to all three of the patents.

This suit, as I understand it, was filed on August 17th, 1933. Now, it was some time prior to that, as I understand it, that these disclaimers were on file in the Patent Office, that is correct?

Mr. Darby: In July.

The Court: In July. And, after all, there can not be any rigid rule. The Court in other Circuits, speaking about the effect upon the public, pointed out in the case which you just cited, Mr. Darby: "When the patent has once passed through all the courts then available, the statute should have its effect; else the putatively invalid claims may remain as scarecrows, preserved against the bare possibility that at some future time they may come to life." (Quoting from the case of the Hoe Company vs. Goss Printing Press Co., 31 Fed. 2nd, 565).

But it seems to me that unless there has been an unusually long delay—and it has been less than nine months —it does not seem to me to be—what was the exact amount of time in this case?

Mr. Darby: Eight months and thirteen days.

The Court: Eight months and thirteen days. That does not seem to me to be unreasonable under the circumstances, where the statute does not prescribe any time.

The Supreme Court in the Ensten case said on page 455:

"When a competent court has declared his pretentions without sufficient foundation, we think good faith and the spirit of the enactment demand that he act with such promptness as the circumstances permit, either to vindicate his position or to relieve the public from further evil effects of his false assertion. But for the benign provisions of the statute, such an assertion would invalidate the whole patent; and these provisions were intended to protect only those who by prompt action either seek to overturn an adverse ruling or retreat from a false position."

It seems to me in these cases that we are really more concerned with whether there has been any effect upon the defendant before us, which is unfair, rather than the possibility of the public, speaking broadly, being affected by a delay which might be a little bit unreasonable; but for aught that appears, a case of this kind ought not to have any effect upon anybody, but possibly on the litigants themselves.

Now, the disclaimers were admittedly properly filed before this suit, and there is no irregularity. I am not impressed, in other words, with an argument in a case of this kind that any deception has been caused the public. I think that is too broad a statement. And unless the statute says you have got to disclaim within a given time, the leeway left to the Court ought to be construed in every case rather liberally in the absence of proof of some untoward result flowing from the delay. Now, there is nothing in this case to indicate that anybody has been affected adversely by what has happened. Certainly the defendants in the present case have not been. Everybody concerned certainly knows all about the situation; and plaintiffs became affected at the time, so as not in any way to injure the present parties. So I think it is more of an abstract case of possible delay rather than a case of concrete injustice growing out of this argument of defendant; and I am rather impressed with the

reasons given for that delay, although when you stop to analyze them they may not fit within the interpretation given the statute by the numerous cases to which I have been referred. So that is my present inclination.

If you have anything further to say on the point, Mr. Darby, I will be glad to hear you.

Mr. Darby: Merely this: I regret that I did not also ask your Honor to read the Otis Elevator case, which covers the point which apparently impresses your Honor.

The Court: Well, I will be glad to read it.

Mr. Darby: That is the Court of Appeals of the Ninth Circuit.

The Court: Have you got it there?

Mr. Darby: No, it is cited in the brief.

I might say this: Here was the situation there: It was a patent infringement suit by the Otis Elevator Company against the Atlantic Elevator Company, I think it was, on the Pacific Coast. The matter was referred to a Special Master. The Special Master found eight of the ten claims of the patent to be valid and infringed. One claim he found to be invalid because of aggregation. The plaintiff took no exception to the holding of the Special Master that this claim was invalid, and went through the accounting proceeding; and the defendant in that case, where it was purely a technical matter—I think the whole subject is extremely technical, and I do not think that the question of fraud or imposition is a matter which any of the courts have gone into. I think they have taken rather the attitude that this is a remedy that can be availed of by a patentee that has had some part of his patent held to be invalid only if he acts promptly; and the reason is that he is in the position to hold people in the interregnum, but whether or not he does is not a matter of proof, or with which the courts have thus far been concerned.

The Court: But that ought to have some bearing upon the liberality or lack of liberality with which the given court would approach the matter, ought it not?

Mr. Darby: I do not know, if your Honor please. Of course, we are all entitled to different viewpoints on a

technical subject of this nature, and my own personal thought, for what it may be worth, is this, that great criticism has been directed to the judicial system on the law in connection with patents making it possible for a party to be unsuccessful in one circuit, and then going to another circuit and then retrying the thing all over again; and I have more or less hailed the decision of the Supreme Court in the Ensten case as a step in the direction of giving a patent owner a chance to try out his patent once; and he can get in another circuit only if he is successful. That may be a very far-fetched theory, but nevertheless, that is the one that I think has been evolved as a result of the Ensten case. He can not go to another circuit and retry the same subject-matter unless he is successful. I may be a hundred per cent wrong, but that is my guess as to what was behind the reasoning in the Ensten case, because——

The Court: Granting that to be sound, I do not think the Ensten case would compel the Court to agree with you because there was a different type of delay and very much longer delay.

Mr. Darby: Much longer delay; and all the Court held there in so far as the question of time was concerned is that it must be within a reasonable length of time, holding that the particular length of time before it was unreasonable, leaving for the other courts to decide, as I view it, what constitutes a reasonable length of time.

In the Otis Elevator Company case the time of the delay there was about a year. In the few cases in New York the Court has fixed the time as thirty days from the decision of the Supreme Court. I am frank to confess that those are the only authorities that I have got. Those are the only authorities I am able to find. They pointed the way rather clearly to me to present the motion to the Court. And as I understand it, the Court has overruled my motion to dismiss at this point and if your Honor will allow me an exception, for the sake of the record?

The Court: Yes.

Mr. Darby: I will next offer a stipulation and order permitting the defendant to amend its answer by the inclusion of a paragraph, raising as a defense to the suit

invalidity of the patent by reason of unreasonable delay in filing the disclaimer, as well as the inadequacy of the disclaimer.

(Paper handed to the Court).

The Court: You do not care to be heard on that?

Mr. Edwards: No, there will be no objection to that.

The Court: Very well, I will allow that to be filed.

Well, gentlemen, we can proceed, and adjourn at one o'clock, if you want to start with your statement of facts.

OPENING STATEMENT ON BEHALF OF PLAINTIFFS.

Mr. Edwards: I have here, your Honor, loose copies of the three patents in suit, which may be of some convenience. All three patents relate, as I stated before, to the operation of radio receiving apparatus through household alternating current.

The subject of wireless telegraphy is of comparatively recent origin. Most of us can remember as matters of public knowledge that our present day broadcasting stations came into being about 1921. I believe it is generally considered that the first commercial broadcasting station was the KDKA Station at Pittsburgh, which was opened in the fall of 1921. During 1919, 1920 and 1921, and the years following the war, we had many amateurs, using what we called crystal detector sets. Then, when the broadcast stations opened the demand for receiving sets, standardized the sets, and brought in the necessity for manufacturers making sets which would be sold on the market, to be used.

In the meantime, following the war, the amateurs and others began using vacuum tubes. By that we mean the three electrode vacuum tube, the invention of Dr. Lee De Forest, which was recently sustained by the Supreme Court. And I think there will be little dispute among us that that invention has made more changes and established more new industries than anything that we have had within the past twenty-five to thirty years or more. It enabled us to amplify a small energy into a large energy. More specifically, if we receive a very small or infinitesimal energy upon the grid of the tube, that grid

will control a local circuit, which may be one of very large power; in short, that is a distortionless relay.

The Court: Now, you are talking in technical terms. I have no doubt but that is correct, but I wish you would sort of get down to earth a little more and talk in layman's terms, and then I believe I could follow you better. Let us assume that I know nothing about this problem at all.

Mr. Edwards: Now, at this stage I do not think it is necessary for me to say more than that when these sets of which I speak, using these vacuum tubes, came upon the market, we used batteries to furnish the current for the tubes. You will hear of A batteries for lighting the filament, and B batteries for furnishing current to the plate, and a filament battery for furnishing current to the filament, that current being furnished, as I say, by the batteries, which was a steady current.

The current which we have in our lighting circuits is of the alternating current, that is, it first increases in strength to a maximum in one direction and then recedes to zero, and then goes down to a maximum value in the opposite direction, and comes back to zero, and goes up and down, and so on. If you put that type of current upon these tubes you got into difficulties, by making a humming noise, which was much louder than the signal.

Now, what I propose to do, with your Honor's consent, when we open this afternoon, is to put on a motion picture film of the General Electric Company, of its Educational Department, which illustrates the underlying principles of the transmitting station and the receiving stations. The film does not show the features here in controversy, but it is the starting point, so to speak, where we begin with the inventions of the patents in suit.

These films show this three electrode tube, or illustrate the circuits, and the putting of the electricity upon these circuits, so that we can to some extent visualize what the tube is, how it works; and so we will then understand what the witnesses talk about when they are talking about the filament circuit and the grid circuit and the plate circuit and the A batteries and the B batteries and the C batteries. And it is a non-controversial film. I understand Mr. Darby will not object to it, because it will save

considerable argument on my part, and will, as I say, merely give us a starting point. If Your Honor has no objection, we will just run this film off over in the corner. The two of them take nearly half an hour. There is some matter in them that could be left out, which has no particular bearing here, but I think it would be somewhat instructive in enabling us to visualize the situation as a starting point.

From there on we propose to show to your Honor just what sets were on the market, what the effect of alternating current on these sets would have been, and then show by demonstration here by the patented apparatus and the features introduced by these patentees, which result in receiving this faint signal circuit, putting it into an instrument which is receiving a substantial alternating power current, and yet getting out of the instrument a pure signal current, undistorted, and carrying the original speech or music without disintegration or destruction. And perhaps if this is the convenient time for us to adjourn, we might start with that immediately after lunch.

The Court: Very well, sir.

Now, let me have some information as to the patents. How many claims now are involved in this suit?

Mr. Edwards: I will give you a list of the claims, which I should have marked on the patents. But in the first patent, in Patent No. 1,455,141—your Honor has that before you?

The Court: Yes.

Mr. Edwards: You might mark claims 1 to 4 and claims 13 and 14.

In the Dunmore Patent No. 1,635,117——

The Court: Now, just a moment. I thought 14 had been passed on by the Circuit Court of Appeals.

Mr. Edwards: That is correct, sir. 1,455,141 is one, and in that case claims 3 and 14 were passed upon by the Circuit Court of Appeals and Judge Morris.

The Court: And 3 and 14 are the ones that the disclaimers are involved with here?

Mr. Edwards: Correct.

The Court: What claims are you considering now?

Mr. Edwards: We are not considering claims 1 to 4, 13 and 14.

The Court: It seems pertinent to ask here, why is this litigation all split up? Why could not the patent attorneys and client relieve the Federal Courts all around by not bringing these separate suits? Why, when asserting these claims before the Court in Philadelphia, why could they not all have been tried there?

Mr. Edwards: I might explain the circumstances, why it happened.

The Court: That situation does not appeal to me. I have had some practice in that, and I do not look with favor upon it.

Mr. Edwards: In an ordinary case I think we would all agree with your Honor. The reason that that happened in this case was because at about the time the suit was brought against the Radio Corporation on this patent there were four large contestants who brought interferences in the Patent Office, which involved practically all of these claims and others. We were confronted with long, expensive contests in the Patent Office; had we insisted on trying out the claims involved in those interferences, we would have had a trial that would have occupied months, because each of those claimants would have insisted on proving his date of invention. The case having been started, it was then deemed advisable to try in that case claims 3 and 14, which were not involved in any of the interferences, and thereby it became possible to present to the Court an issue as to the claims which did not involve the question of priority as to these other inventors. And that is the reason that these other claims have come in. Since that time all of the interference contests have been disposed of, and now we bring in the broader claims which are broader than the claims in issue in the Third Circuit.

Mr. Darby: Could I add to Mr. Edwards' statement my viewpoint on that?

The Court: What do you say?

Mr. Darby: Could I add to Mr. Edwards' statement my answer to your question?

The Court: Yes.

Mr. Darby: These additional claims are directed exactly to the same subject matter, the same invention as the claims which were before the Court of Appeals before. They add nothing new. So far as we are concerned, I have always viewed the fact that additional claims where added at all was because they would have something left over, and in addition to, on their face at least, what was declared to be invalid by the Court of Appeals, and it is directed to the same invention, the same subject matter, in just slightly varying language. I likewise call your Honor's attention to the fact that the disclaimer which was filed in connection with the patent was filed in connection with each of the claims that are here in suit. In other words, the disclaimer was not limited to claims 3 and 14, which were held invalid by the Court of Appeals, but the disclaimer was filed as to each of the claims which are now declared upon, namely, 1 to 4, and 13 to 14.

Mr. Edwards: For the same reason that we desired to put on the record our declaration of our interpretation of those claims, beyond which we do not want to go. As to the claims being the same thing, I think it will appear as we proceed that the claims are not for the same thing. Claims 3 and 14 were limited specifically to separate hum-eliminating means in the respective parts of the instrument. That is a separate and separable part of the invention. And the other claims are not so limited, but are broad enough to include these means, whether they be in separated parts or not, a very substantial difference, I submit, as will be shown later on.

Mr. Darby: Will it be of assistance to your Honor, although I have given the citations of the Court of Appeals decisions—would it be of assistance to your Honor to have loose-leaf copies of the Court of Appeals decisions?

The Court: Very well.

(Papers handed to the Court.)

Mr. Darby: From which you will find that the Court goes into the subject-matter rather than claims.

The Court: Well, are you arguing now, Mr. Darby, that this Court ought not to consider the matter at all?

Mr. Darby: Oh, no, sir.

The Court: At this time?

Mr. Darby: I understand that is past. That was the question of my motion. But I understand the Court has overruled my motion, and will go into the merits.

The Court: No, I mean to consider it on other grounds. Maybe you have some other grounds?

Mr. Darby: No. You have disposed of my motion adversely to my contention, and I see no escape but for the Court to go into the merits and determine whether or not it will disagree with the Court of Appeals for the Third Circuit on the same evidence. And I anticipate that Mr. Edwards will, at the conclusion of his statement of his case, and prior to the offering of evidence, give me an opportunity, if the Court desires it, to have me expressly outline my position in the case, in the hope that it might narrow the issues.

Mr. Edwards: May I note with regard to the next patent, the Dunmore and Lowell patent, No. 1,606,212, if your Honor will mark claims 1 to 9, inclusive. And the other patent, the next patent, Dunmore Patent No. 1,635,-117, in that patent will you mark claims 9, 11 and 12; 9 is the one that was before the Circuit Court of Appeals. Here we bring in 9, 11 and 12, the three claims.

Now, I might say at this point briefly, referring back to the Lowell and Dunmore Patent 1,455,141, the patentees employed a type of receiving set which first amplified the receiving signal—the signal comes in very faintly, and it amplifies it. That signal is of a frequency which is too high to be heard; in consequence, in the next portion of the instrument they use a detector, which is one that reduces the frequency down to one which the ear can hear. In the next stage, the audio amplifier stage, the signal, as it comes from the detector is given a much greater volume by a large local power, and comes out in the form of the loud speaker or other equivalent of a telephone receiver.

The Court: Well, we will take a recess here until 2:30.

(Thereupon, at 1:15 p. m., a recess was taken until 2:30 p. m.)

AFTER RECESS.

(Conference in chambers until five o'clock p. m., during which conference counsel for defendants orally presented motion to dismiss bill of complaint as to patents 1455141 and 1635117 because of inadequacy of disclaimers, and at which time the Court adjourned until the next day at twelve o'clock noon.)

Second Day's Proceedings

The Court met, pursuant to adjournment, at 12 o'clock noon.

Present: Counsel for the respective parties.

The Court: Gentlemen, I am prepared to hear from you in line with what was suggested yesterday.

Mr. Edwards: I have two cases in the Supreme Court, your Honor, that it seems to me I should call to the attention of the Court, in line with what was under discussion yesterday. One is the case of Mast, Foos & Company vs. Stover Manufacturing Company, in 177 U. S. page 485. That was a case where the Circuit Court of Appeals of one circuit had upheld the validity of a patent. A motion for preliminary injunction was brought in another district, and the District Court upon that motion held that the patent was invalid in view of the art offered upon that motion. That ruling was affirmed by the Circuit Court of Appeals of the Court which rendered the ruling, and the case went to the Supreme Court. The proposition was advanced that the first ruling practically foreclosed the Court in the second case, and the Supreme Court uphold the ruling, finding that the patent was invalid, saying, "Comity is not a rule of law, but one of practice, convenience and expediency. It is something more than mere courtesy, which implies only deference to the opinion of others, since it has a substantial value in securing uniformity of decision, and discouraging repeated litigation of the same question. But its obligation is not imperative. If it were, the indiscreet action of one court might become a precedent, increasing in

weight with each successive adjudication, until the whole country was tied down to an unsound principle. Comity persuades; but it does not command. It declares not how a case shall be decided, but how it may with propriety be decided. It recognizes the fact that the primary duty of every court is to dispose of cases according to the law and the fact; in a word, to decide them right. In doing so, the judge is bound to determine them according to his own convictions. If he be clear in those convictions, he should follow them. It is only in cases where, in his own mind, there may be a doubt as to the soundness of his views that comity comes in play and suggests a uniformity of ruling to avoid confusion until a higher court has settled the law."

And then there is other language along the same line. That case was decided in 1900, and has been cited, and affirmed and reaffirmed by the Supreme Court in many, many decisions since that time. The latest one, I find, is in 280 U. S., in a case decided in 1929, the case of Sanitary Refrigerator Company vs. Winters, 280 U. S., page 30. In that case a Circuit Court of Appeals had held a patent to be invalid in one circuit, and another suit was brought in the Third Circuit, and a different record made, and the Court of Appeals of the Third Circuit upheld the validity of the patent. The case went to the Supreme Court because of the divergence of opinions. The Supreme Court upheld the Third Circuit.

Now, in that case, as in this case, there was no question of res adjudicata or privity of parties or estoppel involved, but purely a question of comity; and the Supreme Court in the Sanitary Refrigerator Company case said, "Nor have we occasion here to consider at length whether, as urged by Winters and Crampton, the decree of the Circuit Court of Appeals for the Seventh Circuit affirming the interlocutory order of the District Court adjudging the infringement and ordering an accounting, finally and conclusively determined the question of infringement so as to become binding upon the Circuit Court of Appeals for the Third Circuit. The bill in the Dent case was filed before the judgment of the Circuit Court of Appeals for the Seventh Circuit had been rendered."

In this case they were the same parties.

And then the Court said: "This judgment was not set up by Winters and Crampton in the Dent case by any amendment to the pleadings; nor was it even introduced in evidence in that case. In short, there is nothing in the record in that case to raise the defense of res adjudicata or estoppel by judgment; and the only effect of the decree in the Seventh Circuit when called to the attention of the Circuit Court of Appeals for the Third Circuit in argument was, at most, that which it had under the doctrine of comity, constituting a rule, not of law, but of practice, conveniency and expediency; and if we thought the action of the Circuit Court of Appeals for the Third Circuit 'correct upon the merits, we should not reverse its action' so we were of opinion it had not given sufficient weight to that doctrine. See Mast, Foos & Company vs. Stover Mfg. Company, 177 U. S., 485, 488."

Now, as I understand it, we are here this morning for a trial upon the issues raised by the Bill and Answer in this case. We had an intimation yesterday that we would not be permitted to call witnesses to testify with respect to the first and the second patents, the ones that had been involved in the previous litigation. In consequence, we have prepared statements of what those witnesses would testify, if called; and if the Court should hold that we are not permitted to call these witnesses, then I would propose to make the offer in accordance with the Equity Rule 46, in order that if the Court excludes that evidence, we would then have a record, showing that we had proffered the evidence, and that it had been excluded, for whatever reasons the Court advances. I hope your Honor will not think I am too persistent in suggesting that under all the circumstances it seems to me that the short way to get through with this is to make our record. If the defendant is willing to accept these statements as the direct examination of the witnesses the witnesses may be called and cross-examined, and in that way the evidence would be materially shortened, and we would be able to get into the record here our story upon the facts of this particular case.

The Court: Might I see how you have prepared that proffer?

Mr. Edwards: It might be remarked, in a perfectly facetious way, that some one has said that if he had

more time he could write a shorter letter; and that is somewhat our situation here. As you will see, it is somewhat voluminous, but it includes what our witnesses would testify to.

(Paper handed to the Court.)

Mr. Darby: Have you a copy for me?

Mr. Edwards: If, as and when.

The Court: Have you had a copy of this, Mr. Darby?

Mr. Darby: I just asked for one, and Mr. Edwards seemed rather reluctant to let me see it.

Mr. Edwards: It does not seem to me unless and until we are in the trial of the case and make this offer in a formal way that we should submit a copy of this to counsel for the other side, and thereby apprize them of our entire case, in which case, if there is some subsequent adjournment and the trial does not proceed, they have our case in detail, and we do not have theirs. Before we submit this, it seems to me we should know whether we are in the midst of the trial and we are making formal offer of this evidence.

The Court: Are some of these witnesses, but not all of them, the same ones that testified in the other case?

Mr. Edwards: Yes, sir, I believe all of them except Vandeventer; all except Vandeventer testified in the other case on various matters—not to the same matters that are included in these statements.

The Court: Well, they were available for the same testimony, weren't they?

Mr. Edwards: I do not think so, because many of the statements contained in there were either not known or not appreciated by our witnesses at the time of the other trial.

I might have mentioned in connection with that Mast-Foos case that the court there referred to the fact that the second case might bring in additional testimony of other facts which would lead to a different conclusion than was reached in the first case.

The Court: There is one other question that I want a little more light on. In reading the opinion again in the Court of Appeals for the Third Circuit and some other cases, the question struck me whether, as a matter of fact, in view of the state of the disclaimers in this case whether the construction of those disclaimers or the claims as modified by them is not a matter that ought to be determined by the Delaware court anyway and not by this Court, or whether it is not a question of a reissuance. Now, what have you got to say on that.

Mr. Edwards: I think, sir, that that is a matter that can be determined only in this court and by your Honor in view of all the facts and circumstances and after an examination of the patents and the prior art, to determine whether the disclaimers were necessary, and the effect thereof. There was no way that I know of of bringing the matter to the attention of the Delaware Court.

The Court: Well, now, is that true? As I read the opinions—of course, I have not seen the decree—but the opinion declared invalid the various claims. Now, ordinarily, were these simple claims, not involved in a lot of technical elements, like you have here, that would end the matter. Those claims would be out of the picture. Isn't that true?

Mr. Edwards: They might or might not be, sir, under the circumstances.

The Court: Take a very simple case——

Mr. Edwards: I go with you to this extent, that a man with a very simple patent should be required to act with much greater promptness than one where the situation is difficult and the invention complex.

The Court: But I am asking, if a higher court in a given jurisdiction declares a simple claim, a claim which we will assume now could not be revamped, declares it invalid, then that is out of the situation.

Mr. Edwards: No, sir, I do not agree with that, because I insist that under the Mast, Foos & Company case and the numerous other cases cited, that that patentee is not obliged to accept that opinion, no matter what it says.

The Court: I mean out of the situation, in so far as that court is concerned.

Mr. Edwards: Yes, sir.

The Court: I meant to add that.

Mr. Edwards: Yes, sir, in that circuit.

The Court: If, however, the claim is of such a character that the plaintiff feels that it can be reconstructed, so to speak, so as to meet the requirements, or rather to void the charge of invalidity, isn't that, then, a question to be determined by the Court that passed upon it, or by the Patent Office?

Mr. Edwards: I do not think so, sir. And I do not know how it would be brought up, unless possibly by some bill on review. But if you attempted to proceed in the same Circuit, you would probably be met by the situation like in the Hoe case, where the Court said, If you want to go any further in this case, you will have to file a disclaimer, because, so far as this Circuit is concerned, we are through.

The Court: What I am getting at as a practical matter is this, wouldn't it certainly be most helpful to a court of another jurisdiction, including this one, if the plaintiff believes that he can so amend these invalid claims as to make part of them still valid, wouldn't it be most desirable for the Court that had the most to do with those claims to do that?

Mr. Edwards: I do not think so, sir, because, even if you did do that, you would be right back where we are now. Suppose these disclaimers had gone to the Court and the Court said either that they are no good or that they are good, or any other ruling, that would not prevent further litigation; and the next court would have to meet a situation on the record as presented to that Court. Now, here, in this situation I would like your Honor always to keep in mind that on the decision of the Circuit Court of Appeals, these men did something of great value.

I neglected to read from Judge Wooley's opinion regarding this receiver patent.

"This is a highly scientific organization"—referring to this patent—"and this is what Lowell and Dunmore say they invented. Looking at it as they disclose it, that is, looking at it close up, without looking at its background, it would appeal to any one that is invention.

"If they had invented this apparatus and all its elements, their invention unquestionably would have been basic; it would have been more than that; it would have been stupendous, for it would have covered the major portion of the practical radio art as it stands today."

Now, that *it* what Judge Woolley said would have been the case if the facts were as we said they were, namely, if this apparatus operated the way we said it operated.

The Court: Well, now, that is just my point. You are asking me to listen to the same story, but you are going to put it on a little better, like the second performance is always expected to be a little better than the first. It is always better than the rehearsal.

Mr. Edwards: We hope so, and we expect to add a few extra features.

The Court: Now, then, you are asking me after the judges of that Circuit gave all the time and thought to these questions—and you have gone to the Supreme Court and have been turned down—you are asking me to go all over that as a whole, thinking that I may take a different view after hearing your arguments and the arguments on the other side, and being told what you propose to offer, and having read and reread, as I have again this morning, both opinions in the Court of Appeals, you nevertheless are asking me, merely on an expectation that I will reach a different conclusion—all I say now is that on such knowledge as I am able to muster on a matter of this kind, considering the main questions that are brought out, I find nothing wrong in what they said. And, therefore, I do not see why comity or any other rule requires me to make up another record, in the bare possibility that I may detect some erroneous finding of an appellate court, and, in effect, of the Supreme Court. Now, that is what I would do in a contract case, if I were prima facie satisfied, and I would say that I would abide by the ruling here. I think the matter is further complicated

by these other questions rather than the disclaimer, and I would like some further light on this point, because I confess it is entirely novel to me. If claims have been declared invalid by a court of another jurisdiction, is it quite the proper practice to come into the second jurisdiction and ask the Court sitting for the first time in the matter to reconstruct those claims which that other Court has thrown out? I do not like it; it does not appeal to me as being sound practice, because, assuming that they are capable of reconstruction, it seems to me the appeal ought to be made to the Court that lived with those claims and studied them and determined they were invalid, and why they were invalid. Now, I am not saying that there is prohibition against my doing it, but it seems to me that simply adds weight to the first argument which I heard, that this Court is being asked to do something which is not only unnecessarily burdensome, but which will destroy finality of decision, and encourage litigation in patent matters, which I am opposed to doing.

Now, I did not want to interrupt you. Have you anything on that point?

Mr. Darby: Yes, sir, I have this: Yesterday I was rather of the impression that it would require testimony to support the proposition which, I think, has been more or less freely admitted by Mr. Edwards, that even as disclaimed in language the disclaimer is not in effect a disclaimer. Therefore, in view of the argument and the enlightenment as to the subject matter that the Court has received, I would like to add to my motion to dismiss the ground that no disclaimer has been filed, which relegates the patent—that is, no adequate disclaimer has been filed, no disclaimer which even purports to meet the invalidation, or is directed towards meeting the invalidation, has been filed, which thereby places the patent squarely under the Statute, which says that the patent can not be proceeded under in a patent infringement suit anywhere in the judicial system.

The Court: I would like to hear Mr. Edwards first on that. But I must say, after reading the claims again, the ones that were declared invalid, and reading the disclaimers, that it is impossible for me to say whether you have not just attempted to set up in other language, by reservations, what the Court has knocked out.

Mr. Edwards: I do not see how your Honor can pass upon that question without having before you an understanding of what the patent is, the devices themselves, the prior art, and all that sort of thing.

The Court: Aren't you asking me then to do the job of the Patent Office?

Mr. Edwards: Not at all, sir. I think I am only asking the Court to do that which, under these decisions to which I have referred, and what has been done over and over again in the last thirty-six years, and that is to allow us to make our record on the issues raised in this particular case. I submit that, stripped of all else, we have here a bill and an answer. Now, there are two courses, you might say, that are open. One is the suggestion that notwithstanding everything else, and as a pure technical defense on the bare subject of delay, that the whole case should be dismissed. I was not going into that, because I think that has been disposed of. And obviously, if these men invented something, it would be a terrible thing to throw them out of court because of the fact that their delay is considered unreasonable.

The Court: I want to say that I am not prepared to rest judgment entirely on that ground.

Mr. Edwards: Your Honor brought up what I must admit is a much more practical proposition. I realize all that your Honor has said about the desirability, perhaps, of having only one court pass upon these questions, about the objections, such as they may be, in going into other jurisdictions; but, after all, your Honor, isn't that a question of expediency rather than a question of right? As a matter of strict law, we come here with a Bill and Answer, and are we not entitled to make a record? If your Honor sees fit to exclude and make a ruling that we are not allowed to take any evidence under our Bill, of course, that is within your province, and all we could do would be to except. Your Honor could, of course, either allow the witnesses to go on the stand, and then adhere to the intimation given by you that in spite of that testimony it would not change your outlook on the case, or if we are to take a short cut and the evidence is excluded, I submit we are at least entitled to have on the record that which we offer to prove, and then we have made a record in which we have offered to prove certain things,

and from that time on, of course, it is the province of the Court to decide whether or not that evidence would or would not change the Court. But, as I say, stripped of all else, are we not vacillating between two questions, sir, one the question of our right to maintain the action and to put in our story, and the other the question of all of the disadvantages, the interruption of the work of the Court, and the time and complexity and difficulty of all those questions, which, after all, I submit to your Honor, are questions of expediency and not questions of right.

The Court: Mr. Darby, do you want to say anything further?

Mr. Darby: Not unless your Honor has something in particular.

The Court: Have you any cases on that last point I referred to, about the matter of disclaimer?

Mr. Darby: On the matter of the disclaimer being adequate?

The Court: On the question that I raised about the character of the disclaimer and the necessity or desirability of the matter not being placed upon another judge ab initio.

Mr. Darby: I have no authorities on the latter phase that comes to my mind, your Honor. On the first phase of it there are plenty of authorities, that a disclaimer must be as extensive as to the grounds of invalidation. There are plenty of authorities on that. The authorities are entirely uniform on that. But on the question of it being heard by the Court that originally invalidated the patents, I do not think offhand of any authorities.

The Court: Well, is it your contention that you could show me now that it is as extensive as the invalidation?

Mr. Darby: Oh, absolutely.

The Court: Have you a copy of the decree? Were there any qualifications in the decree that followed these decisions?

Mr. Darby: The decree is merely to the effect that claims 3 and 14 are invalid, and the Bill is dismissed for want of equity. That is the standard form of decree in

the Delaware Court. The interlocutory decree which was appealed from, of course, held the patent to be valid anyhow, after the mandate of the Court of Appeals went down. It is the standard form of decree that the claims were invalid, and the claims were dismissed for want of equity.

The Court: It seems to me that the plaintiff puts back all its aggregations again in another form.

Mr. Darby: That is exactly what happened. As I say, that appears from the face of the patent which is before the Court upon my motion, and forms an absolutely sufficient ground in itself, and certainly forms an additional ground, taken together with the disclaimer, for the granting of the motion. It forms such a sufficient and such a solid ground that I certainly have no desire of inducing this court to render a decision which could not stand before an appellate court. I would not do so. I would be the loser in the end. And I am thoroughly satisfied and contented with those grounds.

The Court: Now, turn for a moment to the Patent No. 1,455,141, and to the disclaimer, and turn to 3. 3 and 14 are the ones that were thrown out, are they not?

Mr. Darby: Yes, sir.

The Court: Well, now, if you read 3 as declared invalid——

Mr. Darby: Claim 3.

The Court: ——wherein is there any difference between that and the disclaimer or reservation?

Mr. Darby: There is no difference whatever. The Court held the patent to be invalid because——

The Court: The claim——

Mr. Darby: The Court held the claim to be invalid because of aggregation of those three elements, those three different means in the radio frequency section, in the detector section and in the audio frequency section. All three of those or any one of those three would operate to eliminate hum in their particular section, wholly irrespective of whether or not there was hum in either of the other two sections. That was the effect of holding

an aggregation by the Court of Appeals. Now, they disclaim as to claim 3 all separate means connected with said amplifier and rectifier——

The Court: Where are you reading from?

Mr. Darby: I am reading from the disclaimer.

The Court: On the bottom of page 6?

Mr. Darby: On the bottom of page 6, paragraph No. 3. They disclaim any source of alternating current for supplying power to said amplifying means as set forth in claim 3, except such as supplies raw alternating current to the cathode heating circuit or circuits and rectified current to the plate circuits of such amplifying means. Well, now, that is all that they showed in their patent originally, so they are disclaiming everything that they did not show. That is what that amounts to. Now, the other part, which is the more important part, they disclaim any means, any separate means connected to each of said amplifying and rectifying means for eliminating the hum of said alternating current, except as stated, and there they have enumerated under A and B the separate means that they disclose in their patent. In other words, there can be no question whatever that if claim 3 as originally filed is invalid because of aggregation, it is just as invalid because of aggregation in its disclaimed form, because instead of disclaiming the utilization of separate means they disclaim all separate means except the enumerated separate means, which is not a disclaimer at all. And your Honor will recall—that I think was more or less admitted by Mr. Edwards yesterday. He first took the position that no disclaimer was necessary at all.

The Court: Well, that seems to be a fair argument, and if it is sound as to that claim, it is equally sound as to 14, as I view it.

Mr. Darby: Yes, sir.

The Court: And it is equally sound as to claim 9 in the other patent.

Mr. Darby: Absolutely.

The Court: Now, Mr. Edwards, how do you answer that?

Mr. Edwards: I say, if that argument is sound, sir, and the claims put back this so-called aggregation, then there never was any necessity for a disclaimer, and Mr. Darby's whole motion falls. Because, then he would have the patents back the way they were, and the disclaimers would be out of it.

The Court: As I read it with the reservation, leaving out any knowledge of what the words mean, the disclaimer does seem to disclaim what the Court has said was invalid, and then by reservation they put back at least the major material elements. I do not have to have any knowledge of what they mean, but just put back the terms.

Mr. Edwards: I think, sir, in simple——

The Court: That, it seems to me is flying in the face of what the Appellate Court of the Circuit said was invalid, and you are asking me to still reopen that, and after hearing all the case, to see whether I do not think you are justified in that, or if not in that, then to differ with the Court on some of these other claims which were not knocked out, but which are admittedly very much broader than the ones here.

Mr. Edwards: I do not construe those disclaimers in that way. I say if they are so construed——

The Court: Well, I may have a poor ability to interpret language, but that is the way they strike me, as I read them.

Mr. Edwards: My position is simply this, that I do not see how you can construe those disclaimers without having before you a clear explanation of how the patent operates and what the prior art is. I do not see how you can do it. That is my first position. May I add another thought?

The Court: Yes.

Mr. Edwards: My interpretation of those disclaimers goes simply to this, as simply as I can state it: These claims all show means for eliminating hum. Now, whatever language they use, those means would mean nothing more than the substantial equivalent of what this patentee showed and described, and those disclaimers

mean nothing more than saying the means which were described are the specific means shown in this patent, or their equivalents. Now, I do not myself see where that introduces any great difficulty. It may raise a question whether that was merely a matter of precaution or of necessity, but as I said before, I do not see how the Court can pass upon that without knowing all of the circumstances; and I look upon that as a branch of the other proposition, namely, we are here on bill and answer, and are we to be allowed to make a record or not?

The Court: Have you the disclaimer on 9 before you, the claim 9 in that patent?

Mr. Darby: Yes, your Honor, claim 9.

The Court: Now, let me see, that is in 1,455,141?

Mr. Darby: 1,635,117.

The Court: Yes. I do not think I have the disclaimer before me. Yes, I have.

Mr. Darby: That is in Paragraph 2. He disclaims any filament electrodes specified in claim 9, except such as are energized by raw alternating current, and any means for supplying a negative potential to the grid electrode of said electron tube, from said source of alternating current, as specified in the claim, except such means as comprise a bias determining resistance connected in a series path between the grid and filament electrodes and shunted by a condenser of low impedence to power supply frequencies.

Now, if you refer to claim 9, they have done virtually the identical thing in this patent that they did with the other patent. They have disclaimed what the Court of Appeals held to be invalid, and then reserved by anticipation the thing that they disclaimed by the specific instrumentality shown in the patent. It is not a disclaimer at all. And, of course, I submit to your Honor, in view of the explanation that has been had, you do not have to have evidence to determine the sufficiency of the disclaimer; you do not have to consider the prior art. You have to consider nothing more nor less than the claim of the patent as it appears on its face, and the opinion of the Court that invalidated the claim, and then the disclaimer itself, and ask yourself the simple ques-

tion, has that disclaimer by the patentee disclaimed that which the Court has held to be invalid? And the necessity of doing that is the statutory requirement before a suit can proceed on the patent in any jurisdiction. That is the expressed provision of the statute.

Mr. Edwards: I do not understand that there is any such statutory provision. The statute is that after a patentee becomes aware of the invalidity of his claim he must disclaim within a reasonable time.

The Court: Well, it provides, of course, in cases where the court has invalidated them that——

Mr. Edwards: Where it has gone to the last jurisdiction, or the circumstances are such that the patentee should be aware that that is the last decision.

Now, let me take that claim. It is a fair sample of the other disclaimers, and I think I can illustrate what they meant by reason of that. Claim 9, you will note, calls for filament electrodes. The filament electrodes are the filaments which are heated by the current. In the old art they were heated by batteries. So this patentee disclaims any filament electrodes except such as are energized by raw alternating current. His patent shows no other kind of filament electrodes except such as are energized by raw alternating current. He was, therefore, doing nothing more than to say that the claim means that which I have shown with respect to that element. Then the claim further says—it disclaims any means for supplying negative potential to the grid electrode of the said electron tube from said source of alternating current, as specified in claim 9, except such means as comprise a bias determining resistance connected in a series path between the grid and filament electrodes and shunted by a condenser of low impedence to power supply frequencies.

Now, in his patent he had shown and described nothing else than a resistance 18, shunted by a condenser 19, in series in the grid circuit, the condenser being of a low impedence to power supply circuit. He had shown no other way of doing it; so with that disclaimer analyzed, it is not anything more than saying, I do not want my claim to be understood as claiming anything but what I have shown.

Now, as to whether or not that is a proper disclaimer to do that, whether or not it was necessitated, there being no prior art that necessitated any such thing, are purely matters to be determined by the Court after consideration of all the facts.

Likewise, suppose it does leave the claim open to the objection that it does not avoid what the Court of Appeals for the Third Circuit said. I say to your Honor that is a matter of comity, not adjudicata.

The Court: Well, the ultimate proper decision, if the disclaimer is not a proper disclaimer, is that the Bill should be dismissed, because you should not proceed until the invalid matter is gotten out of the way.

Mr. Edwards: Not at all. I submit to your Honor you would then be met with this question: Suppose you should hold that those disclaimers do not change the situation over what happened in the Circuit Court of Appeals in the Third Circuit. You would then hold that the disclaimers are invalid. We would then meet the question, was it necessary for us to file a disclaimer at all in order to maintain a suit? Now, that is the question under all the circumstances. In the first place, there is no reason why a patentee should be obliged to accept that decision. He should certainly be allowed to wait until he has every opportunity of testing the case. And if the Court should hold later, as I think it would, that the decision of the Circuit Court of Appeals was wrong, then no disclaimer ever was necessary.

The Court: Well, now, right there, Mr. Edwards, I do not think I can follow you, because yesterday we had extensive argument on the cases, the soundness of which I understood you to accept to the effect that disclaimers must be made effective within a reasonable time, whatever the patentee may consider to be a reasonable time, after a final decision of the Court with proper jurisdiction.

Mr. Edwards: Not quite that, sir. Within a reasonable time after the patentee becomes aware that the patent is invalid, and always subject to the fact that the claim is invalidated. Now, the decision of the Circuit Court of Appeals does not make that claim invalid, except in the Third Circuit. It is not invalid elsewhere.

In this Court, if we prevail upon the facts and show that the claim is valid, that it is not an aggregation, that it is not a mere matter of supplying direct current to the tube, then no disclaimer ever was necessary. That brings me right back to the fact that this Court would have to hold or insist that the claim is invalid. It does seem to me that in every turn of this argument we come back to that one simple question, and that is whether these matters are to be treated as matters of comity, or whether they are to be treated as absolutely foreclosing us from making a record in the case.

MEMO.

At this point the Court ruled orally that the defendants' motion to dismiss as to the two patents, Nos. 1,455,141 and 1,635,117, on the ground of inadequacy of the disclaimers should be granted. The views expressed by a court in so ruling are embodied in the final opinion of the Court on file in this case.

Mr. Edwards: Your Honor, may we have it on record that we offer to produce witnesses and offer to give testimony, as in the memorandum handed up this morning; and may we have an exception to the ruling excluding that?

The Court: Yes, you are entitled to all of that.

Mr. Darby: May I explain to the Court that Mr. Edwards and I have stipulated that the testimony given about this third patent in the previous case may be received here as our testimony. Therefore, all that I need to add to that is brief testimony by an expert, to point out the identity between our receiver, our loud speaker, rather, which is now charged as infringement, with the loud speaker which Judge Morris held did not infringe. Very specifically, I do not think they do. There are differences that exist between our speaker and theirs. So that is all my case will be limited to.

The Court: Very well, gentlemen, we will go on at half-past two.

(Thereupon, at 1:30 o'clock p. m., a recess was taken until 2:30 o'clock p. m.)

After recess (2:45 p. m.)

Mr. Edwards: If your Honor pleases, before I start patent No. 1606212, may I be clear about the record on

the other patents. As I understand it, the proffer of depositions and exhibits was excluded and an exception granted and they are to be marked under the provisions of Equity Rule 46 as a part of the record: Am I correct in that understanding?

The Court: I think so. I think that is correct.

Mr. Edwards: That is the rule, you will remember, that provides that where evidence is offered and excluded it may be marked and made a part of the record in order to show what was offered.

The Court: Have you anything to say about that, Mr. Darby?

Mr. Darby: My understanding is, if the Court pleases —I have not any objection to the record showing that a proffer was made—but my understanding is that the motion to dismiss was granted in advance of trial, and as long as the record shows that, then what in addition it shows, I care not.

The Court: I did not understand your last statement.

Mr. Darby: As long as the record clearly shows that the motion to dismiss was granted in advance of trial, I do not care what else is shows.

Mr. Edwards: I have been under some uncertainty from the beginning as to just what period we entered on the trial of the action, assuming as I did that we were in the trial of the general case, and we offered these documents, then we were to have the right under Equity Rule 46 to have them marked.

The Court: I do not think we have ever gotten to the trial, have we?

Mr. Edwards: If this was before the trial, then, I take it, that the record as it stands showing that they were offered before your Honor made the decision would cover the situation. I am merely, out of precaution, endeavoring to be clear that the record shows just what was offered prior to the decision, whether that decision is supposed to be prior to or during a trial.

The Court: Now, a lot of that does not relate to the point on which I decided the matter, does it?

Mr. Edwards: I think it does, sir. As I understand the point of your Honor's decision, it is to the effect that notwithstanding our offer to prove these matters, that under all the circumstances you think we should not be permitted to come in and make a record, and whether it be used from that standpoint or from the more technical standpoint, but, after all, this is a trial under Bill and Answer, in the course of which we offered this as evidence, as we do, it may be immaterial. As I understand the situation, we are here on what amounts to a trial of the action under the issues raised by the Bill and Answer and we offered this statement of what we proposed to prove and the Court has refused to receive evidence to that effect, in which case the procedure would be to mark the proposed testimony and exhibits under Rule 46, and it would go along merely to show what occurred at the trial.

The Court: I have not any objection to it, but it does occur to me that this might be treated like the ordinary case in which there is a motion to dismiss the Bill. It either stands or falls, and if your Bill is dismissed, you appeal from the final order and if that appeal reverses the situation, then you come back. I do not see quite how the testimony enters into it now. However, I am not precluding you ultimately from submitting the testimony if the Court of Appeals says I have to.

Mr. Edwards: Well, precisely, sir, but in order that the Court of Appeals may know whether or not that testimony should have been received, it will need to know what was offered, and the purpose of Rule 46 is precisely that, that this offered testimony should be marked under the provisions of Rule 46.

The Court: Aren't you getting in, under that, all your side of the case, in effect, and we have not come to that?

Mr. Edwards: Well, in a way that is what Equity Rule 46 provides, that where the Court refuses to receive evidence——

The Court: Yes, but that is in the trial of the case.

Mr. Edwards: Well, but would it not be even more unfair to dismiss our Bill out of hand without even hearing what the plaintiff proposed to do? That is, your

Honor has suggested from time to time that these issues are more or less concluded and that this and that is similar to some other situation and I think we are entitled to have the record here show precisely what happened—at least after the discussion started and before the decision we filed a definite offer to prove certain things, that, therefore, it should be a part of the record, not as evidence, but merely to show what happened.

The Court: Well, I will allow it in now subject to further consideration. I am not disposed to encumber the record on appeal with a lot of stuff that should not be contained in it. What I want the Court of Appeals to decide is whether I am right or wrong on the question of disclaimer. If I am right, the Bill was properly dismissed, and if I am wrong, it was not, and will be sent back for further testimony. However, I understand you do not object to it?

Mr. Darby: I do not object to it appearing on the record that that offer was made, but I agree with your Honor that Equity Rule 46 comes into play only after the commencement of the trial, which is not so in this case.

Mr. Elwards: I submit we have had a trial on that, Your Honor has taken up this matter of Bill and Answer and you have dismissed our Bill. Now, surely we are entitled to have the record show, therefore, that your Honor did it without anything, and, particularly, are entitled to show that we offered and definitely filed a written offer to prove certain things and that in spite of our offer to prove those things, our Bill was dismissed.

The Court: Well, I will allow it in subject to further consideration. I want to give that some further thought.

Mr. Edwards: In connection with the Patent 1,606,212—I shall not stop now to make any opening explanation of the patent because it is so simple—we will put Dr. Lee on the stand and ask him to point out the relevant features and then compare those features with the defendants' speaker. I offer in evidence U. S. Letter Patent No. 1606212 granted November 9, 1926, to Francis W. Dunmore and to Percival D. Lowell, as Plaintiff's Exhibit 90.

Mr. Darby: No objection.

Mr. Edwards: It is admitted, is it, Mr. Darby, that the title to this patent is in the plaintiffs as alleged in the Bill of Complaint?

Mr. Darby: For the purpose of this case, it is.

The Court: Now, what claims are you considering now?

Mr. Edwards: Nos. 1 to 9.

Thereupon DR. FREDERICK W. LEE, a witness of lawful age, produced on behalf of the plaintiffs, having been first duly sworn, was examined and testified as follows:

DIRECT EXAMINATION.

By Mr. Edwards:

The Witness: I graduated from Cornell University in the Electrical Engineering Department in 1911. I was assistant at Harvard University from 1911 to 1913, working under Dr. Kennelly at that time. In 1914 to 1915, I was at Johns Hopkins University, working on the application of radio to geo-physical prospecting. From 1916 to 1928, I was on the faculty of the Electrical Engineering Department of Johns Hopkins University, and the last years of which I was Associate Professor of that institution, teaching radio to the students of the University. Since that time I have been engaged in consulting and private practice on radio questions.

Referring to Patent 1,606,212, I will explain briefly how the apparatus shown and described in that patent eliminates hum in the loud speaker portion of the apparatus. The diagram of patent No. 1606212, shown in Figure 1, consists essentially of an audio frequency amplifier operated upon by the input circuit 1-2, receiving its power supply from an alternating current source in transformer primary terminals No. 27 and 28. To this transformer are connected various secondary circuits, Circuit No. 22——

The Court: Well, now, couldn't you take it—haven't you got one here—and as you explain that, couldn't you put your finger on each of the elements?

Mr. Darby: You see, the difficulty is, your Honor, they have not got anything here that was constructed under the patent. They have got defendants' apparatus.

Mr. Edwards: We have defendants' apparatus, and it has gone into very wide use.

The Court: Well, haven't you got a model of plaintiff's instrument?

Mr. Edwards: We have the model of the other patent here, and I think we have portions that will be relevant.

Q. (By Mr. Edwards) Dr. Lee, in explaining this patent, can you make reference to the apparatus here on the table, and, as you go along, point out in that apparatus the physical parts that correspond to parts in this patent to which you refer. For example, you have referred to audio frequency amplifiers, meaning tubes 5 and 7. Could you point out such amplifiers in any of this apparatus on the table before you? A. I will refer to this bread board model and show where the audio frequency amplifier is, what it looks like, how it looks in the bread board model in this exhibit is marked by the letter C. The audio input circuit is at the yellow terminals, which I will call A and B. These correspond to the terminal of 1 and 2 in the diagram of the Figure 1 of the Dunmore patent. The audio frequency transformer, 11, would correspond to transformer No. 4 in the patent diagram. This circuit does not have two stages of audio frequency amplification, but only has one, so we can consider that transformer No. 4 functions essentially as transformer No. 6 in the patent diagram. The tube, the vacuum tube under question, would therefore resemble vacuum tube No. 7 on the patent diagram. No. 7 is labeled No. 13 on the bread board model. This vacuum tube No. 13 receives its energy or excitation from a transformer through the circuit, which I will mark C. That circuit corresponds to the transformer secondary No. 20, in the patent. And circuit No. 20 in the patent also supplies the filament current for vacuum tube No. 5 as well as No. 7.

Circuit No. 20 is from transformer No. 24, on which secondary 25 corresponds to secondary 20 in the patent drawing. The primary winding of this transformer connects primarily to the alternating current service in

Circuit No. 28. Across this secondary circuit C, which feeds the amplifier, 13, there is a midtap connection, consisting of a resistance, 18, on the bread board model and 11 in the diagram. The plate circuit of transformer vacuum tube No. 13 passes into the primary of transformer No. 33. This corresponds to transformer No. 8 in the diagram.

The Court: That, Doctor, is not helping me any. You are just taking the drawing, and you are telling me how the drawing matches. Can't you, in simple layman's words, tell what the invention is?

The Witness: Yes.

The Court: You have not used a single word that would be clear to a layman; and you assume that I know these technical phrases. Can't you describe what this thing is in ordinary language? Can't you tell me what its object is? That is what I want to know. If you can do that, then I can understand it.

The Witness: Surely.

The Court: If you simply say that those things represent these drawings, that does not help me a bit.

The Witness: Well, I wanted to come to that later, your Honor, if you will permit.

The Court: Well, if you want to start that way, all right, but this does not help me to understand it.

Suppose somebody came in—suppose you were instructing a class in this and wanted to tell them what the idea was, could you put it in clearer language than that?

The Witness: Surely. But I was identifying the circuit with the diagram in the patent, in order to show the parallelism. Now, I will state it very briefly: In the ordinary radio audio frequency amplifier set the signal or radio or audible speech——

The Court: By signal you mean that noise that comes out, the sound?

The Witness: By the signal in that case I mean the speech which is transmitted to the instrument is amplified by the ordinary vacuum tube. In such amplifica-

tions, if the tubes be operated purely on direct current, under the ideal system, eventually, after passing through those tubes, you would get the same signal amplified to a higher degree. Now, if the tubes have in them elements of disturbance, of annoyance, of hum, which superimposes itself upon the signal, then the objectionable hum also comes out of the output circuit of that system. This patent describes a method of eliminating a portion of this hum which comes from the secondary or the output circuit of the last transformer, and shows how this hum may be eliminated in the speaker itself. The speaker itself consists of two circuits, one circuit which you may call the energizing circuit of the speaker, and the other circuit you may call the armature, or moving element of the circuit. This moving element of the circuit is connected directly to a cone, and the movement of the circuit causes the cone to move in exact ratio to the energy in this armature circuit which converts electrical energy into sound energy. This patent states that if you have in this armature circuit a hum, you can have another hum in the energizing circuit, but select your connections in such a way that the two hum impulses neutralize each other and thereby eliminate the hum which would arise through the circuit. That, in sum and substance, tells the story.

In the patent the coil which is the moving coil connected to the tube of the receiver circuit is coil No. 9 and coil No. 10 is the energizing coil.

As to whether the pulsating current from the rectifier, 4, in passing through the coil, figure 10, has anything done to it in the way of smoothing out fluctuations, I will say that the only smoothing-out effect is through the inductance in the coil No. 10, which would tend to keep the current flowing in coil No. 10 once it had started therein.

Mr. Edwards: Mr. Darby, will you admit that this apparatus before us, that is to say, the portion showing the tubes, condensers and the loud speaker but not containing these switches, was manufactured and sold by the defendants in this case, within six years of the filing of the bill of complaint and subsequent to August 5, 1933.

Mr. Darby: On your statement made to me this morning or yesterday that that receiver was purchased from

a distributor or retail dealer of Stewart & Warner receivers I am perfectly willing to accept your statement.

Mr. Edwards: I do make that statement. I have here the bill of sale for the instrument, dated August 17, 1933.

Mr. Darby: I won't put you to the proof.

Mr. Edwards: I will offer in evidence the Stewart-Warner set, set up on the model, just referred to by counsel, and ask that it be marked Plaintiffs' Exhibit No. 91.

(The set referred to was marked "Plaintiff's Exhibit No. 91.")

Q. (By Mr. Edwards) Before you get to that model, Dr. Lee, let me ask you one or two other questions. As I understand you, the signal coming out of these amplifier tubes 6 and 7 is a frequency carrying the voice signal. A. The audio frequency is always considered to be a voice frequency so it would be a voice signal.

The Witness: As to the question asked me as to what form this voice signal is in when coming out that is, whether there is a carrier wave, I will say that along the circuit it has not any carrier wave connected with it at all. It is just purely the ordinary telephone or voice circuit. That is a frequency within the audible range, which generally runs from 60-cycles per second to maybe 10,000 cycles per second but is usually about three or four thousand cycles per second. 8,000 cycles per second is considered the ordinary telephone frequency. The frequency in the rectifier tubes of the patent is of the order of 60 cycles a second. That of the model is of the order of 120 cycles per second. The ordinary house lighting circuit is usually 60 cycles a second and 120 cycles is just twice that. That is well within the audible range. This audible range is of the order of about 60 cycles per second.

In this patent the signal frequencies are coming from the receiver elements 5 and 7 through the transformer 8, and the power frequencies are coming from the rectifier elements connected to the transformer. That is, through the rectifier tube, 18, of the patent. One frequency is connected to coil 9 and the other to coil 10 as to whether these frequencies are in phase opposition, I will say that

you can not tell whether they are in phase opposition by looking at the diagram. The only way you can tell they are in phase opposition is by first connecting them in one direction to your system and then reversing either on 10 or 9, in which case you will have an added hum, if there is such a phenomena present, or there will be no hum at all if the phenomena does not exist. The specification specifies that the coils should be connected in such a manner that there is no hum from the system. The patent means that the current supplied to 9 and the current supplied to 10 should be flowing so as to neutralize each other pursuant to the force upon the armature connected with it. They are what we call in phase opposition.

I will refer to plaintiffs' Exhibit 91 and state if I find in that exhibit the elements corresponding to the audio amplifier, the rectifier for furnishing current to the tubes and also the loud speaker element to which I have referred.

The loud speaker elements are the armature and the field circuit, which I will call the reversing element circuit No. 1 and the double system of circuits containing both an armature and a field by the combination of wires composed of white, green, yellow and red circuits.

In other words, there are two pairs of circuits there which make up this combination; one pair is for the field excitation and the other pair is for the armature.

I will demonstrate on that model how the loud speaker operates when these two coils in this circuit are connected in phase opposition and how it operates when they are not so operated.

(Demonstrating) There is just a little element of time required to heat the tubes. Now, under this condition you have also the incoming signal. In order to demonstrate the effect of the phenomena alone, it is more convenient to eliminate the signal entirely and just hear the phenomena of hum. I have, therefore, detuned it slightly. Now, that is a normal connection and there is some hum, very slight. This (indicating) is the reverse connection.

When I say this is the reverse connection I mean I have reversed the armature circuit of the speaker.

When I say I have reversed it, the condition the coils are left in is as follows:

That condition requires that the coils should be not working in phase opposition but the effect should be such as to amplify the hum rather than to compensate or balance the hum out. At the present time in this condition the speaker is operating not in phase opposition, and in this condition there is a very distinct hum being delivered from the speaker.

Mr. Edwards: If your Honor will listen to that for a minute I think, perhaps, you can hear it from here. I do not know whether your Honor can hear it?

The Court: Yes.

The Witness: I will reverse it now. When I reversed these coils I placed the hum currents in phase opposition so that they neutralize each other in the armature of the speaker. The hum in this case is greatly reduced.

I am shown a sketch marked, Stewart-Warner No. 109, and asked if that represents the connections employed in this model during test to which I have just referred. I will say that this circuit substantially represents the circuits in the model described.

I will state what there is to show how the circuits are connected and what that represents. In this circuit there is represented the last stage of the audio stage which amplifies the signal before the energy is supplied to the armature of the loud speaker. From the secondary of this transformer a connection is made to the armature of the loud speaker shown by the yellow circuit. In this circuit is interposed a reversing switch, usually called the 2 pole double throw switch. After the circuit passes through this reversing switch it enters directly into the armature circuit. The field circuit of this loud speaker is also indicated in the form of a black circuit which receives its energy from the propor portions of the set.

Mr. Edwards: I will offer in evidence the diagram referred to by the witness and ask that it be marked "Plaintiffs' Exhibit 92".

I also offer in evidence the stipulation entered into by counsel for the respective parties and dated June 5, 1934,

regarding the sale of certain apparatus by the defendants, as "Plaintiffs' Exhibit 93."

The Witness: Referring to the diagram marked, "Chassis Model 109", forming part of this Plaintiffs' Exhibit 93, I have colored a photostat copy of that diagram to indicate the rectifier and loud speaker circuits as shown in the diagram attached to the exhibit. The rectifier circuit of this exhibit is indicated by a purple line. The loud speaker portion of this circuit is indicated by a brown line and the circuits can be followed through the using of the colored circuits.

Mr. Edwards: I will offer in evidence the colored copy of photostat shown the witness and ask that it be marked, "Plaintiffs' Exhibit 94".

The Witness: I have prepared a simplified diagram showing the circuits in the photostat which have been colored. The simplified diagram is represented by Exhibit 95 in which also the loud speaker circuit is colored brown and the rectifier portion of the alternating circuit is colored purple. The circuits shown in this Exhibit 95 are substantially the same circuits as in the photostat marked No. 109, forming part of the exhibit.

Mr. Edwards: I offer in evidence the colored diagram referred to by the witness as "Plaintiffs' Exhibit 95".

The Witness: Referring to this colored diagram, I can identify briefly the loud speaker circuit to which reference has been made by me. The armature of the loud speaker circuit receives its energy from audio frequency transformer 81774, and the field circuit of the loud speaker consists of a portion of the rectified circuit which supplies the plates of the tubes. In this circuit the loud speaker field also serves the giving of smoother rectified current to the plates.

Mr. Edwards: That is all on direct.

CROSS-EXAMINATION.

By Mr. Darby:

Q. Dr. Lee, how long have you been familiar with alternating currents? A. I studied alternating currents in 1907 before I went to college.

Q. And the same is true with respect to direct currents? A. I started to study direct currents about the some time.

Q. Now, the problem or the desirability in so far as actuating a loud speaker, such as in the Dunmore patent in suit is to supply the coil with direct current so as to prevent distortion or a noise to drown out the music or speech that is to be reproduced, is it not? A. Under the ideal condition there should not be any variation of either the armature or the field. However, in some of the rectifier devices that we use in conjunction with house currents there is always a small ripple or hum left which in this case exists both in the armature as well as in the field coil. The purpose of the invention shows how the effect of this residual current or hum current how it can be compensated for or avoided concerning the output of the speaker.

Q. The ideal condition is to supply the loud speaker with direct current without fluctuations, is that right? A. You are supplying the speaker in the armature entirely with alternating current. There is no direct current at all in the armature circuit of this speaker. Ideally in the field circuit, if you could supply direct current entirely to the field circuit, that condition would be ideal.

Q. And therefore, what the patent in suit is directed to is to overcome fluctuations which occur in the field due to the use of alternating current? A. The object of the invention is to use the fluctuations in the field and also the fluctuations which exist in the armature circuit, due to the fluctuations in the plate circuits, so as to compensate the effect of the armature and the field.

Q. How long have you been familiar with rectified alternating currents? A. Of course, I have been familiar with rectified alternating current ever since I was in college. That was 1911.

The Witness: It is very old to rectify alternating current to obtain direct current. That circuit is right old, the method of rectification.

Where you rectify alternating current, the rectified current that you obtain as a result is apt to have fluctuations.

As to how long I have been familiar with filters for smoothing out devices to eliminate those fluctuations or reduce them as far as possible, I will say that there has been issued some time ago a patent describing in varying detail by Hull, showing the method of filtering out fluctuations from rectified to alternating current sources. This is probably one of the first instances. The patent handed me is the one that I refer to, No. 1,251,377. This was applied for in December, 1915, and issued December 25, 1917. In addition there are other patents that were issued to Dr. Pupin, and rectifying the portions of the hum or ripple frequencies which come from sources of direct current, not batteries, such, for example, as would be considered a component of a direct current dynamo. These have also a certain amount of hum in them. The degree of hum which is permitted to go through those filters of the Hull type depend in large degree upon the dimensions of the constants in question. In other words, I could make a filter which does not filter very well, but still do some filtering, and I could keep on applying more energy and making the circuit constants larger and larger and larger, and eventually I could have a filter which would be 100 per cent filter, with a negligible hum.

Mr. Darby: I ask to have the patent referred to by the witness marked for identification.

(Patent referred to marked, "Defendants' Exhibit A", for identification.) (Defendant's Exhibit C.).

By Mr. Darby:

Q. Now, as you say, if you get a good enough filter, you can eliminate the hum by the filtering method, is that right? Is that what you just said in your last answer? A. If you make the capacity and the inductances in the system sufficiently large, which, of course, would make it very big and expensive, and would not be entirely necessary for a successful operation of ordinary sets, you can in the limit produce at great expense a filter which would be ideal.

Q. Then your answer to my question was yes? A. Under the question it is physically possible to do so, yes.

Q. And where you use filtering apparatus, inductances and capacities between the rectifying device and the field coil, that method of eliminating hum was referred

to in the prior trial on this patent as the method of prevention of hum, was it not?

Mr. Edwards: Well, now, I object to that. The record of the prior trial will speak for itself. Mr. Darby does not give any indication as to who referred to it, or why, or in what connection. It seems to me that is going rather far afield.

Mr. Darby: I have no ulterior point whatsoever, except I am trying to adopt the nomenclature of the prior case, so as to simplify discussion, simplify testimony.

The Court: I will allow the question.

The Witness: In the prior trial, I would need the records of the prior trial in order to give you an exact answer.

By Mr. Darby:

Q. Well, don't you know what the method of prevention means as applied to elimination of hum? A. If you refer to the circuit in the Hull patent, the output of the circuit is intended to give a uni-directional current the degree of variation which depends entirely upon the constants adopted in the circuit. In other words, there is always a fluctuation at the terminals of this circuit when current is drawn therefrom.

Q. Does the term, Method of Cure, mean anything to you? Does that refresh your recollection of this subject? A. Speaking of it in the art, you never use the word "cure" in any electrical system. I do not know just—I can not apply that in the technical terms of the art.

Q. Did you read the opinions of the Court of Appeals in those cases? A. I have not read the opinions of the Court of Appeals.

Q. Well, I suggested this to you, that in the patent in suit it is a fact, is it not, that no filters, such as inductances and capacities are included in the circuit from the rectifying device 14 and located between the rectifying device and the field coil 10, that is correct, isn't it? A. The field coil 10 itself is a rectifying device, being a large inductance.

Q. Will you please answer my question? A. There are no supplementary methods of rectifying the direct current between the coil 10 and the circuit in question.

Q. There are not any devices, are there? A. The inductance on secondary transformer 26 may be considered an inductance in that circuit which tends to keep the current steady.

Q. That is the transformer which feeds current to the circuit? A. That is right.

Q. And with that possible exception there is no filtering element included between the transformer and the field coil, is that correct? A. In the patent there is no other filtering action. On the other hand, the hum in this circuit would have been very much greater than the hum that would exist if the filtering action would take place. In other words, the patent operates effectively this way too.

Q. In other words, you would expect in the arrangement of the patent in suit that you would have a substantial hum in the circuit leading to the field coil 10, is that correct? A. There would be a very substantial hum if proper provisions were not made for correcting the phase reversals in the two circuits.

Q. And the provision made by the patent to overcome that, as you testified in direct examination, is to so arrange the coil 9 that it is in opposite phase to coil 10, is that correct? A. The arrangement is such that the current in coil 10 and the current in coil 9 would be such that if, for example, the current in coil 9 was increasing, the current in coil 10 would be decreasing, and the resultant effect would tend to neutralize the disturbance of both coil 9 and 10.

Q. So that in the arrangement of the patent you have fluctuations in the circuit of coil 9 and fluctuations in the circuit of coil 10, which, according to the patent, you balance out by so arranging those coils that they are out of phase with each other? A. So arranged with the curcent in the coils that they are out of phase with each other.

The Witness: Rectifier 14 is a half wave rectifier. It rectifies only the current in one direction of the alternating current supply.

Alternating current is current which first is negative, and starts from zero, first becomes negative and then goes back to zero, and then becomes positive, and so on. A half wave rectifier will rectify only the negative current or only the positive current.

Q. So that in a half wave rectifier the current that you obtain as a result is—assuming, for my point, that you are just supplying the negative current—the current that you get as a result, which is direct, is, in effect, and layman's language, is a little bit of negative current, then an empty space, then some more negative current, then empty space, and some other negative? A. All that would hold true if there was not anything else in the circuit except the rectifier. However, in this circuit you have the inductance coil——

Mr. Darby: I think the witness ought to answer my question.

The Court: Go ahead.

Mr. Darby: If it has anything to do with my question I have no objection. But he is going ahead of my question.

The Court: He evidently thinks it does. Go ahead.

The Witness: You have not stated your circuit completely. If you will state your circuit completely, I can answer you.

By Mr. Darby:

Q. All right, I am merely trying to give a graphic picture in non-technical language of the resulting rectified current secured by a half wave rectifier. A. On what kind of a circuit?

Q. Any kind. A. The circuit must be complete.

Q. Any kind of a circuit? A. Well, by circuit you have a capacity or inductance or resistance in it, or various combinations.

Q. All right. A. Do you want to make your resistance, for example, or inductance, or what kind of a circuit?

Q. Let us have a plain copper wire circuit. A. Plain copper wire will have resistance and inductance, if you like, back of it that way.

Q. All right. Is my graphic picture correct? A. Your graphic picture leads to error.

Q. You give me a graphic picture. I merely want to bring to the Court in layman's language what it is. I do not want to be technical. I want to bring to the Court

what is the result of half wave rectification of an alternating current? A. In a half wave rectification the energy component or the voltage which sends the current through the wire is only applied to the circuit from one-half the cycle. The current which flows because of that impulse of voltage depends entirely upon the character of the circuit upon which the voltage was impressed.

Q. Well, choose your own type of circuit, and draw me a picture, will you, in non-technical language, first of pulsating current, which flows a little while, and then stops, and then flows a little while. A. It is the pulsating current which may increase while the applied energy is there, and which when the applied energy is removed, it decreases again. Whether this decreases to zero or not depends upon the circuit.

Q. But there is a gap between the pulses which is represented by the other half of the alternating current that has not been rectified, is that correct? A. The interval betwe-n the pulses in that which has not been rectified is of the half—is of the time of a half a cycle, if that will help you any.

Q. Will you, doctor, tell me a simple illustration——

The Court: Well, now, I was coming to that myself, if I can interrupt. Doctor Lee has no doubt tried, and every one here has tried, to make this matter clear to me. And I take all responsibility for it not having been made clear. Frankly, I am just about as much involved as I was before, when you started. That is no reflection upon the efforts that have been made. Now, this thought occurs to me, and I would like to ask Dr. Lee whether this is possible—Mr. Edwards said that the matter was very simple when he started out, and it would not take but a little while to cover it. Isn't it possible, Dr. Lee, for you to take, say, that blackboard and just assume that I am the lowest form of student that you had or may have in a course in Johns Hopkins; isn't it possible for you to draw a diagram on that board, and, after you have drawn it, trace the course of the current at the time it comes out of the coil, through the various coils or rectifiers, or what not, the way it goes, and describe what it does, and how it eliminates this hum in the patent; and then draw a corresponding drawing of the alleged infringing device, and show me how the current comes in and what happens to it in there. I do not know

whether that is possible; but if it is not possible, unless the two machines are set side by side—and I understand you have not got them here, that is correct, isn't it?

Mr. Darby: That is my understanding.

The Court: When I say these two machines, I mean the two set-ups. Unless what I suggest is possible, I am frank to say I do not think I can get any comprehensive layman's understanding of what this is, but if it is possible, go to the board, or a larger board, if that is not big enough, and draw this thing——

Mr. Darby: I was going to do that very thing by simple drawings with the witness under cross-examination.

The Court: Well, the advantage of this is I can visualize it. What I want to see is—I want you to demonstrate the current running through each of these devices. Now, that is the problem, isn't it, to determine how it goes and why in going that way a certain thing happens to it. Isn't that the question?

Mr. Darby: That is the question, if your Honor please; but, you see, the difficulty is, they do not use—nobody else uses this thing on the patent. That is the reason why they have no model of it. They can not put any apparatus side by side with a commercial apparatus.

The Court: Well, Dr. Lee intimates, at least, that he can make two drawings side by side. If you bring that out just a little further I can see it better.

The Witness: Can you see that, your Honor?

The Court: That is all right.

The Witness: (At the blackboard) We will take first the patent drawing. The ordinary transformer consists of primary winding, which is wound around an iron core, and a secondary winding; the voltage applied to the primary winding is transformed in the ratio of the number of turns to the secondary winding, which may be considered the source of voltage or power. I am going to draw it diagramatically this way (drawing diagram). There is the primary winding. This is usually the house supply, 110 volts.

The Court: Is that where the current starts in?

The Witness: That is where the power starts in, the current start in. Then this core of the transformer offers a very convenient way of getting the voltages at various—you get to the coils various voltages here. You may want to put a small coil on here and get a small voltage by just putting a few turns there. If you want very high voltage, you put a great number of turns on there. Now, in this diagram of the patent, I think he has one, two, three, four, five, six—six different windings, one of which is the primary, and each of the separate other windings are designed to give the proper voltages for the circuits which they want to operate upon. Now, we are interested in a vacuum tube or rectifier device, which consists of a heating element, an element which has to be heated, and this element that is to be heated is generally of very low voltage, of the order of one or two volts; so we will put a little winding on there and supply this with the proper heating current.

The Court: Now, in a word, what is this, what is the theory of that?

The Witness: This heating current activates a tungsten wire. Now, when tungsten wire gets red hot or white hot, it has a property of emitting negative particles in all directions from it; and this, therefore, can be made a portion of another circuit in such a way that if you would take another element in there—in this case connected two together—if you would connect this together, that wire current would only flow when it could take the advantage of the negative charges of the electrons; as soon as the negative charges flow up through, then the current can flow through. That is, while this side is positive and this side is negative, the current will flow, being one-half of the alternation. In other words, the voltage applied here and here may be considered a battery, and at one portion of the time it is in this direction, which we call a positive direction, and the next portion of the time, when its polarity is reversed, then this becomes negative and that positive, and the current tends to flow in the reverse direction. While the potential is in this direction, the current can flow; when it is in the reverse direction no current flows in the circuit. Now, if you take this portion of the circuit and connect

it to a coil of this nature, then it is like applying force to a big mass; you may apply force for some time before you can get the thing to move. So the current does not immediately begin to flow proportionally to the pressure you put on there, which we consider voltage, but it drags behind it; and if they are in a negative portion of the cycle, it kind of sloughs—in other words, you have got pulsations in it, which you may call current in that circuit; and that current tends to keep flowing, although it may drop off—the degree which it drops off depends entirely on what the resistance in the other constants of the circuits is. It may go down to zero, and then have in this interval no current, and then later on it may repeat itself; or you may have a sufficiently high inductance that at once it may carry itself over into this phase and then come back again, and go on, which you may call a pulsating current, always in the same direction, but not of constant amplitude; in other words, the current strength changes a little bit, but it is always in the same direction, which is called a pulsating current. This you can consider the primary or the field of the speaker. Now——

The Court: Now, why do you call it that?

The Witness: Well, the reason for calling it the field is because of the construction of this speaker. If you take the speaker, it looks something like this (drawing diagram), this is iron. And if you look at it from the top—if you will pardon me——

Mr. Edwards: Don't rub that out, doctor, because I want to offer this sketch in evidence——

The Witness: I have just moved it back.

Mr. Edwards: —or a copy of it.

The Witness: I believe if you view it from the top—this is round—let me draw it again, your Honor, because it is a little confusing.

(Drawing diagram).

This section here we consider, this portion in here, this is iron. Now, there is an air gap in here and in this air gap is placed the coil which we call the armature coil. Now, the winding itself is wound in here in the form of

a big coil which fills the whole space here (indicating). In other words, this is just a coil wound around this iron step on the inside, and when this coil is energized there is a magnetic field which goes across this gap. I am going to enlarge that gap a little bit because that is the whole trick of the thing. Here is the field across the gap, the magnetic field. The current which energizes it, comes from this winding in here. When the current flows in one direction through here——

The Court: Where is that on the diagram?

A. On this diagram, your Honor?

Q. No, on the other one. (A. That is just marked diagrammatically by this coil (indicating). All of this coil really signifies this system. I say, under the ideal conditions, when the current—if you can have direct current through here (indicating) this field here would be absolutely constant, it would not change. However, if you put a pulsating current in here (indicating), there would be sometimes when the field would be getting a little bit stronger when the current was in that direction—I am going to draw the wave of the current again—when the current comes to a maximum in this direction it begins to get a little the best, then its strength becomes a little less—the magnetic field is exactly apportioned to the current which we are applying to this interval which we call the air gap. In this air gap there is a transformer winding. If the current flows through this winding and it is in the magnetic field, the force which acts on there to move it up or down, depending upon what the direction of the current in this armature winding is, depends upon how strong this field is and how big that current is. What they generally do is to take this coil and mount it on a receiving system and affix it to a cone so that this thing is solid now, and as the current changes up and down this whole cone is vibrated up and down and transmits this force onto the diaphragm. When the current is in a pulsating direction in here (indicating), the direction will force it up, when it is in the other direction the force is down.

The Court: Can't you go ahead now on your small diagram and finish that out?

The Witness: May I rub this off of the blackboard?

Mr. Edwards: I would like to offer these diagrams referred to by the witness in evidence and, with the consent of counsel, make a copy of them so that the record, the testimony of the witness, can be followed with this diagram.

Mr. Darby: It is perfectly agreeable, but, to save time, I suggest that we turn this around and use the other side.

The Court: That is doing just what I do not want done——

Mr. Darby: I am sorry, your Honor?

The Court: —because I am trying to get a complete picture of the whole thing.

Mr. Darby: I am sorry.

The Court: I do not yet know how far you have gone. Where are you now?

Q. Where does the sound come in? A. The sound is not shown in this circuit. With your permission I will introduce it now. I will have to take a little bit off of this circuit.

Mr. Edwards: May I offer in evidence the diagram made by the witness on the blackboard?

The Court: You can not do that now, because it has to be copied.

Mr. Edwards: By consent of counsel we will substitute a copy of the blackboard copy.

The Court: He can redraw that again. I want him to finish the drawing and show me how the sound comes in and show how the current affects it.

Mr. Edwards: May he not do that on the other side?

The Court: I do not think so because I will be looking at two things. I want to see this all together.

The Witness: If I can rub this off here?

The Court: Yes.

Mr. Edwards: May he substitute another drawing later on?

The Court: Yes, he can draw it again.

The Witness: Now, we also have connected to this transformer a vacuum tube, or amplifier circuit. Now, that consists of three portions: One portion we will call the filament; the other portion is, you might say, a throttle or control and the third portion is a plate. Now, this portion of the circuit is very similar to this (indicating). In other words, this is heated by a source of energy, that source of energy is also taken off of this transformer, so we can heat that tube and bring it into condition. Then there is a signal that we say comes into this grid which changes the voltage, the pressure between the grid in this tube—in other words, as the negative electrons come out here—if you make this grid negative it will keep some of them from coming out, if you make this grid more negative it will keep more of them from coming out, and if you make it less negative it will keep less of them from coming out, and, therefore, the current which passes this grid depends upon how that grid is operated upon. Actually, you have to be careful in a condition of this kind that you do not, if you operate on alternating current, that you do not connect the grid—you put a battery in here in order to make that grid negative and now you put a source of transformer in here where the signal is applied to that grid. Now, this is normal (indicating). This grid with respect to that filament is normally negative, but it can be more negative or less negative, depending upon whether this signal is positive or negative or negative or positive, and in that way it changes the potential on the grid proportionately to the signal. Now, in this circuit there must be a potential positive with reference to the grid. That also has to come from this rectifying device. What we do in that case is to put out another rectifier very much like this one. In this case these two points connect together.

Mr. Edwards: Hadn't you better draw a circle around that in order to show it is a tube?

A. This is a tube. In other words, this whole system is evacuated in a glass tube, otherwise you would not get the phenomena of negative electrons coming out of the filament. In this circuit you have got to have a source of potential between this point (indicating) and

this point (indicating) and you have got to get it from this transformer, so they usually have a winding in here which is connected between the two, but you put a condenser in here (indicating), so that when this is positive, when this winding from this transformer here which makes this positive, the current can flow through. In other words, this becomes charged positive and when the current reverses the electrons do not flow through from the other side. In other words, it begins to charge that condenser a definite potential because the current can only flow into that condenser when this is positive, but it can not when it is negative because the electrons do not flow in the reverse direction. So, therefore, this condenser can become a source of energy to supply this plate. The positive part of the plate should go there (indicating) and the negative portion of the plate should go here (indicating). Now, if this condenser is big enough and this source of energy in this tube is large enough, you can put enough charge in here that during the interval in them you have no alternating current—that condenser serves as a source of energy to keep this current going, but due to the fact that this is pulsating, the energy of this circuit, or the current in this circuit is also pulsating, this pulsation, if you put a transformer in here (indicating) can be transmitted very much like this transformer over here, you have audio frequency from the signal coming in and audio frequency going out, only that the tube has strengthened this signal and put more energy in here than is supplied here (indicating). Now, this pulsation which goes on here goes on here due to the rectifier system. You have a condenser in here (indicating) and that condenser gives you the energy during the interval at which no energy can be supplied through this rectified circuit. That is a pulsation that goes on there (indicating). Now, this secondary transfers the energy here (indicating) into the armature circuit into this circuit here (indicating).

The Court: That is what you had up at the top of your drawing?

A. Yes, the same as this (indicating). In other words, it would go to this coil in here. In other words, I have the same coil.

Q. I noticed there is a little one up at the top? A. This?

Q. That. A. This coil in here is this field coil here (indicating), your Honor.

Q. You do not need the one, then, you have got your finger on, do you, to show me the connection? A. May I connect this up to there?

The Court: All right.

Q. That is the loud speaker, isn't it? A. Yes. There is a coil resting in here (indicating), that is a circular coil that is in that air gap. Now, you have a pulsation in this circuit due to this rectifying system and you get a pulsation in this circuit due to this rectifying system, which has nothing to do with the incoming signal at all. In other words, it is an objectionable condition. Now, the art teaches that if the impulse through this circuit, or on here (indicating) and the impulse from this system (indicating) are so directed that as this impulse becomes greater this impulse becomes weaker, we get the resultant action that shows the uniform effect but does not show the effect of each.

Q. Can't you state that a little differently and put your finger on what is supposed to be the novelty in that set-up? A. The novelty of the set-up is this—may I draw another diagram?

The Court: We will not have time this afternoon for that.

The Witness: The current in the armature circuit is here (indicating) and the current in the field circuit is here (indicating), so the resultant force of the two is zero.

Q. (By Mr. Edwards) You spoke of the art teaching you that if these coils are connected in a certain manner —what art are you referring to? A. I am referring to the——

Q. What art teaches you that? You spoke of the art teaching you that if these coils are connected in a certain manner—— A. The theory of the patent teaches you that is the case.

The Court: We will go on tomorrow morning at eleven o'clock.

The Witness: I am sorry, your Honor, I could not put it down in a little shorter space than that.

The Court: Tomorrow, I want you to explain to me again, in even more monosyllabic terms, where the novelty lies. I see the diagram now, but I do not see the novelty. We will go on at eleven o'clock. Maybe I can see it better tomorrow.

(Examination of witness suspended.)

(Thereupon, at 4:10 p. m., an adjournment was taken until 11 o'clock tomorrow morning, June 15, 1934.)

Baltimore, Maryland, June 15, 1934.

THIRD DAY.

(Present: Counsel for the respective parties).

Dr. Frederick W. Lee, resumed.

REDIRECT EXAMINATION.

By Mr. Edwards:

The Witness: Yesterday I made some diagrams on the blackboard and gave an explanation. In order to enable that to be followed, to some extent, I have made a sketch substantially reproducing what was put upon the blackboard. The sketch represented by Figure A is substantially the sketch represented on the blackboard.

In that sketch the input is marked in green at point "input" on the green circuit. There is only one green circuit on this sketch. That is where the signal goes in. The power supply input of the usual alternating current house supply is at points 27 and 28, and the primary of the transformer is marked 24. The filament circuits are all colored with a red pencil. They receive their current also from the common transformer. The kind of current in these red circuits is what is known as raw alternating current. That is current of the exact nature that is supplied at points 27 and 28.

The plate circuit of the output tube 7 gets its circuit from a transformer winding 21, which is connected through a rectifier tube 18, and then to a condenser 16, in series with an inductance 17. The plate voltage is

taken from the terminals of the condenser 16. The current in that plate circuit is of a pulsating nature, which may be defined as being a unidirectional value, but its amplitude may vary slightly at pulsating or uniform intervals. In other words, that is rectified current, consisting of a series of uni-directional impulses.

The circuit from the transformer, 8, to the coil, 9, contains pure alternating current, and it is not pulsating current. That coil 9 is the coil on the speaker that vibrates with the rise and fall of the current in that circuit. The coil, 10, gets its current from the transformer winding 26, which is fed through the rectifier, 14. It is also pulsating in nature. As to what happens to that pulsating current when it goes through the coil, 10, I will say that the coil, 10, tends to smooth out the pulsations.

In the operation of that device, assumed that the coil 8 is wound in the same direction that the coil 10 is wound in, the effect that has upon the operation of the loud speaker is as follows: The pulsations are applied to the cone so as to strengthen the effect of the pulsation in each circuit. That is, the pulsation in one coil aids the effect of the pulsation in the other. As to what is the effect on the loud speaker, if the coil, 9, is wound in one direction and the coil 10 is wound in the opposite direction, I will say that the pulsations are in opposition, and tend to oppose each other, and therefore annul the forces upon the diaphragm of the loud speaker.

So far, I have been considering the operation without any signal coming in. Now, assuming that a signal is applied to the input of the tube 7, and assuming that the coils 9 and 10 are wound in the same direction, then in that case the diaphragm vibrates, due to the cumulative effect of the pulses, and also due to the input signal strength, so as to combine the vibration of both. The signal is distorted. Now, still assuming that the signal is coming in, and assuming when these coils 9 and 10 are wound in opposite directions, the effect on the signal is that the pulsating effects and the distorting effects are balanced out, and the signal comes through without distortion.

The Court: Now, I would like to ask Dr. Lee right there. I have this sketch here (indicating).

Mr. Edwards: Yes.

The Court: Can you put your finger on what you claim to be the real novelty in this combination?

The Witness: The novelty of the invention to my mind consists in using the loud speaker.

The Court: The loud speaker is down there between 10——

The Witness: 9 and 10.

The Court: 9 and 10.

The Witness: Using the loud speaker to eliminate some of the hum from the alternating current source. The novelty consists in using two systems, that is, the coils 9 and 10, which tends to balance out the noise, and, at the same time, not cause any distortion from the actual signal that is supposed to be reproduced by the loud speaker.

The Court: Now, then, in simple terms, how is that done? You have said that is the novelty. Now, just how is it done in A, B, C language? You can not do that, though, without going all the way back over it?

The Witness: I do not want to go back to that, your Honor. I just want to give you the effect in the diaphragm itself. If analyzed into its ultimate value, you will have a force which is applied to the diaphragm of the speaker. If this force is of an alternating nature, the diaphragm vibrates, and that produces sound. Now, the cause of this force from the electrical portion of the circuit comes from two sources; one is the magnetic field and the other is the current in that magnetic field. The magnetic field is supplied by circuit 10. And the current in the magnetic field is supplied by current 9. It teaches that if, for example, the current in 9 is gradually increasing, due to pulsation, we would decrease the field by letting current 10 drop off a little bit, just to compensate that increase of current by decreasing the strength of the field, and therefore reduce the force on the diaphragm to nothing. That boils it down to its last common denominator.

Q. (By Mr. Edwards) Let me interrupt you a moment and ask you this question, Doctor, Let us assume that

the field 10 is of constant strength, receiving current, for example, from a battery. Now, the signal comes in in the coil 9. Now, what does that signal current flowing through coil 9 cause the coil 9 to do? A. The coil 9 vibrates proportional to the signal strength. Coil 9 is attached to the diaphragm of the speaker. And the signal current flowing through the coil 9 tends to move that diaphragm proportional to its value.

The Witness: If we assume that there happens to be a constant current flowing through coil 9, and a varying current through coil 10. That would give you the same effect; in other words, it makes no difference if you keep the coil 9 constant and vary the strength of the field by current 10, and get a variable force applied to the cone of the speaker. As to whether that is equivalent to saying that when the signal energy flows through coil 9, it tends to move the diaphragm of the speaker, and when varying energy flows through coil 10 it varies the field, and that also tends to move the diaphragm, I will say that you have the force upon the diaphragm dependent upon two factors, that is, the signal in 10 and the signal in 9, if you like to think of it in that way.

Now if you assume the signal of 9 only, and an alternating current or a pulsating current in 10. Then you have a varying current in 9 and a varying field, magnetic field, caused by a variation of current in coil 10. Then you get a combined effect of the two. If those two coils are wound in the same direction—then the combined effect is such as to aid the effect of the two pulsations in 9 and 10 and both work to move the diaphragm, with the forces in the same direction upon the diaphragm. When the coils are wound opposite, then the effect on the diaphragm is that the forces are in opposition, and there is no movement of the diaphragm.

Mr. Edwards: I will offer this diagram in evidence, and ask to have it marked "Plaintiffs' Exhibit No. 96."

(Diagram referred to marked "Plaintiffs' Exhibit No. 96.")

The Witness: I was also asked some question as to the difference between a full wave and a half wave rectifier. I will state in single terms just what that difference is. A full wave rectifier takes the raw alternating cur-

rent, and at every half-cycle, instead of permitting it to flow in the opposite direction, as it normally does, it flows in the same direction as it had in the previous cycle, while in the half-rectification, the second half of the cycle is not taken into consideration at all. In other words, there is no application of energy to the system from the second half of the cycle. As to whether the full wave is merely two half-wave rectifiers, and, therefore, has twice as many uni-directional impulses as the single wave rectifier, I will say that in the 60-cycle circuit, in the half-wave rectifier, you would only get sixty impulses a second, while with a full wave rectifier in the circuit, you would have 120 impulses a second. Both of them would act in the circuit in the same direction.

I have referred in my testimony to constants of the circuits. Constants in electrical circuits are generally referred to as resistances, inductances or capacities or combinations of them. A condenser is a capacity and a coil is an inductance.

Mr. Edwards: That is all.

Mr. Darby: No cross.

(Examination of witness concluded.)

Thereupon FRANCIS W. DUNMORE, a witness of lawful age, produced on behalf of the plaintiffs, having been duly sworn, testified as follows:

DIRECT EXAMINATION.

By Mr. Brady:

The Witness: I am the co-inventor with Percival D. Lowell, named in Letters Patent 1606212. I can produce records which tend to establish the time Lowell and I made this invention. There is a copy of my notebook which I kept at the Bureau of Standards, and on page 57 of this notebook is a complete circuit diagram in invention showing the full circuit arrangement under date of January 20, 1922. We actually built and constructed the circuit arrangement shown in my notebook. We had this circuit set up in the laboratory and operating at this time.

Mr. Darby: Mr. Brady, may I ask if it is the purpose of this witness to establish the date of invention?

Mr. Brady: Do you concede the date of invention?

Mr. Darby: Will you answer my question, please?

Mr. Brady.: We wish to show how this invention was made and the developments from the date of the invention and the commercial use of the invention.

Mr. Darby: I thought I could save time if all the witness is produced for is to establish his date. I am willing to accept his date as stated if that will dispense with the necessity of the testimony.

Mr. Brady: That will shorten it considerably. Thank you, sir.

Mr. Darby: That is, for the purpose of this case.

Mr. Brady: When and to whom did you disclose your joint invention?

The Witness: This invention was disclosed on this date to Morris Strock, Mr. Francis Engle, Mr. Robert Kruse and others in the laboratory who were working there at that time.

Mr. Edwards: Is it clear that it is admitted this invention was completed on January 20, 1922, for the purposes of this case?

Mr. Darby: For the purposes of this case, if you do not ask him any more questions about it, but if you are going ahead and prove it anyhow there is no sense in the concession. I am making the concession to save time, frankly.

Mr. Edwards: I want to know if you will make the concession or not?

Mr. Darby: I make the concession if you are not going to prove it.

Mr. Brady: We have not followed that particular phase of it. I am asking now the advantage of the invention.

The Court: May I interrupt here? Perhaps, if I step down to that thing, by touching the parts you can make it as clear as anybody else.

Mr. Brady: That is a good suggestion, your Honor.

(Court leaves the bench).

By the Court:

Q. Do I understand this is set up the way the drawing is? A. This is defendant's apparatus but it is typical of what we have.

Q. And do you claim this is your apparatus? A. Yes, this is the loud speaker——

Q. But it does not follow the drawings in the patent? A. Yes, it does, substantially.

Q. But I could not take the drawing and match each part, that is what I mean? A. No, sir.

Q. Very well. If you will just start, as I said to Dr. Lee, assuming that I have absolutely no intelligence at all on this subject, suppose you were trying to explain to a child how the current comes in and how the voice comes in.

Mr. Edwards: Your Honor, let him point out on that instrument parts corresponding to the exhibit.

The Court: All that exhibit is, is a copy of what is in the patent drawing.

Mr. Edwards: It is the defendant's apparatus. It is a copy of the photostat admitted by the defendant to represent the circuit of this apparatus, and we contend that the portion indicated by a cone there is the loud speaker and the two circuits are present in that diagram, and Mr. Dunmore can point out those circuits.

A. To get down to the fundamental part of the invention that involved the output part of this, this part here is the part of the radio set that picks up the weak signal from the antenna or wire that is strung up in the air and amplifies it so that it comes out from the output of this unit here with sufficient volume to operate this loud speaker device.

By the Court:

Q. Which is this (indicating.) A. Which is this device here (indicating.) This part here is the cone part

that produces the motion of the air that makes the sound you hear and is shown on the diagram. The diaphragm on the circuit is 81274, which is this parchment here. Now, attached to that parchment——

The Court: Wouldn't it be better to start and just take the voice coming through first?

A. I tried to make it simple and jumped over that part of it because the invention is not involved there. This, here is a radio receiver merely used to step the voice up so that it can be put into this device and produce sound. If you like I can go into the details, but it is not necessary, as I see it, for you to understand this operation. This is nothing but an amplifying device.

Q. You mean what Dr. Lee is talking about is down here, then? A. Principally, is right in here (indicating), and back here (indicating).

Q. Well, he has been talking about all of these various coils. Where are they? A. I am about to show them to you back here (indicating)—some of them. The condensers are under here (indicating).

Mr. Edwards: I think, Mr. Dunmore, the coil feeding the signal energy to the loud speaker is indicated on that in brown and that is coupled to a circuit that comes from the tube marked 2A5. Can you find that tube 2A5 in this set?

A. Yes, sir.

Q. And show where that circuit comes from the set. A. For this purpose I will say that this is the output tube that I have my finger on. In other words, this tube here represents 2A5 in the drawing. Now, that tube——

Q. Now, there is a circuit from that plate circuit? A. There is a circuit from that plate circuit shown in yellow here. From this tube the current, from that tube which contains the signal you are going to hear ultimately out through the loud speaker, flows through this transformer.

Q. Can you find that circuit in this set? A. Well, there is the transformer (indicating). This is the transformer, 81774. That transformer is probably, I think, this one under here (indicating), this one I have my finger on.

By the Court:

Q. Which one is that? A. This one here in the base of the set.

By Mr. Edwards:

Q. Down in the base of the set in the upper left-hand corner viewed from the top of the set? A. Yes. Now, the secondary of that transformer is shown in black.

The Court: This is not helping me any. Let us abandon this whole line and just you tell me—leave this aside for the present—tell me, as I said, suppose you had somebody who did not know anything about electricity, or a radio, now, isn't it possible to explain to him what the novelty is?

A. Yes. I will try my best.

Q. Let us leave out all reference to numbers and diagrams and everything else and just suppose you were trying to explain to somebody with no prior knowledge of electricity or radio what the alleged novelty is. A. All right, sir. This cone, which produces the sound in the air, is caused to vibrate by two forces: One force, which is the force that gives the sound in the music, and the other force which is due to the alternating current that comes out of this set and goes into this loud speaker. Now, we do not want to hear that alternating current so we have to use means to keep that from coming out as a hum to distort and spoil the music, so that in order to do that, since there is bound to be some of that hum get into this loud speaker, because it is almost impossible to keep it out, we devised a means of so connecting the two parts of this speaker that they operate, as far as the hum is concerned, in opposition so that there are two forces pushing in the same direction on something which is this cone and the cone can not move, therefore it can not produce any sound of that hum, therefore the hum, as far as the hum goes, there is no sound in the air. But there is no bucking effect; as far as the music goes, that comes out clear and pure, so we do not want that hum and we found means of getting rid of it, not in the set itself, but in the speaker by this opposing phenomena. You may think of two steam engines trying to work in opposition to turn a crank shaft, and if they pushed at

the same time, and pushed in the same direction the shaft would not move. That would be the case of the two hums in here opposing each other, whereas, if they do not work properly and get aiding each other they will come out as loud, as a loud hum, which will distort the signal. It comes right down to not the radio set but the particular way that the speaker is connected, and Mr. Lowell will bring out further features of that.

The Court: You can not explain that to me now by looking at it,—in other words, you say all this can be ignored, practically?

A. As far as your need for understanding the invention is concerned, this is nothing but a device to take the little weak signal that comes in on this wire, which has half of mosquito power and boosts it way up to watts. Well, considerable power that you get here. It is an amplifying device and for the purpose of understanding the invention, as I see it, it is not necessary for you to know this.

Q. This is done, in layman's language, by running it through here (indicating) and by passing alternating current through it? A. Passing alternating current through it, yes, but in order to get energy out of anything and boost it up, you must apply energy. You can not get something for nothing. Now, if this is coming in very weak and you want to boost it up you can supply energy from some source to boost it. That source is this alternating current that is in the house alternating circuit. Alternating current is a very bad current as far as the ear is concerned because it makes an audible range, and when you put it in the tubes it goes into the circuit and comes out here (indicating) and you hear a hum because it is not smooth direct current. It is continually reversing so it is bad to use for this purpose, but it is available in all homes and that is why we use it.

Q. Do I understand you to say that a large part of what is on this Stewart Warner Plaintiffs' Exhibit 95, which represents this (indicating)——

A. All of this here (indicating).

Q. —that according to you that can be ignored? A. I say that for the purpose of making it simple for you

it can be, but it can not be ignored because the hum comes into this circuit.

Q. For the purpose of determining whether or not there is any novelty in the patent I understood you to say it can be ignored? A. Not entirely. I do not mean that because the fact is some hum comes in here and it is that hum that comes in that we make use of, so we can not ignore it entirely. If this (indicating) was not here (indicating), of course, we would not have the invention.

Q. Do I understand you to say you can set this up—do you claim any novelty in the way this is set up? A. No, sir.

Q. And the way this section is set up? A. No, sir.

Mr. Edwards: Not as to this particular patent.

A. On our other patent, yes.

The Court: Then we do not need to talk about it?

A. We do because in a set like this, because any set like this delivers some hum besides the signal, so we have to consider that this is not delivering pure signal.

Q. I understand that, but for the purposes of this case I understood you to say, that you admit that the hum, in lesser or greater degree comes out of any set-up like this? A. Yes, sir. There is some hum that will come out of any set-up like this.

Q. You are not trying to improve on the art there at all (indicating); you are trying to improve here (indicating)? A. Yes, sir.

Q. Then why isn't it a fact that while it is desirable to understand this (indicating), it is not necessary to understand it for the purpose of this novelty in this patent? A. It is not necessary if you will understand that there is some hum that comes out of here (indicating).

Q. We assume that because then you would not have any problem? A. Yes, and it is true because it would be very expensive to build this set so it would not give any hum. That is why we worked out this device so sets could be made cheaper and the cheaper the more hum they will deliver.

Q. You make your device in order to alleviate the conditions of a hum set? A. Yes, sir. This device is sup-

posed to give you good speech and music when a set is put on it that gives some hum in its output.

Q. And this may be of a number of varieties or types, this set here? A. Yes, sir, working from alternating current.

Q. And as long as it gave a hum then you say that the novelty lies in here, in that it decreases or removes it entirely? A. Removes it, yes, sir.

Q. Still I want to get that perfectly clear because it is bad enough to have to understand this (indicating), but, after all, if all this can be eliminated, so far as this patent is concerned—this is the only patent we are now talking about—— A. Yes, sir.

Q. —well, I would like to understand more about this, but it is confusing now to ask me to do it. A. Yes, sir. I have not described this (indicating).

Q. No, I wanted to get that perfectly clear. Now, a good deal of talk yesterday was concerned with this (indicating), as I understand it. A. Yes, it was. The rectifier is involved in here and, of course, that is what produces more or less of the hum. The perfection with which that is built, that is what we have been talking about here, the rectifier, that is this tube here (indicating), that is the tube that does the rectifying action——

Q. It does not make any difference, I understand you to say, whether that kind of a tube or some other kind of tube is used as long as you get the hum when it comes out here (indicating), isn't that true? A. Well, you must have a tube which has the function of the rectifier tube in the set. That is, you must take this alternating current and change it to direct pulsating current.

Q. Suppose, without knowing anything about this instrument, alleged invention of yours, I went down town this afternoon and bought a set and it had tubes in it, it was a modern type of invention, then I met you and you asked me what kind I had bought and I told you, and you said, "Well, that set has a hum in it, hasn't it?" I said, "I do not know whether it has or not", and you looked at it and you would say from your knowledge that it would hum. Then you would say to me, "Well, I have an invention that will remove the hum and that is this (indicating)", so it would not matter what kind of set I showed you as long as it was a humming set, would it? These questions may or may not be foolish questions,

but I understand you said you could set up any kind of a rig like this, provided it performed substantially this function? A. Yes.

Q. And that you are not claiming any invention for this (indicating)? A. No. The invention lies in this part (indicating).

Q. And in nothing in here, either (indicating)? A. No, sir, that is just for demonstrating purposes to show the effect of the invention. You did not hear this the other day, but it shows the result of what the invention accomplishes, how there is a hum and how the invention cuts it out.

Q. To take a perfectly simple simile, as I understand it, you are saying in effect the same thing that a man would say if he had some kind of a contrivance to keep a horse, we will say, from pulling when you rode him or drove him. Now, he would say to you, "All you need to do is to bring me a pulling horse, I have got a bit or a bridle that will, in my opinion, stop him from pulling or lessen the amount that he pulls. I do not care whether it is a black horse or a brown horse or a white horse or how old the horse is or how wild he is or how tame he is, but as long as he pulls this bit of mine is calculated to apply to his mouth." Now, I understand you to say that you do not care how they get the particular form that they produce the hum by, as long as it is produced? A. Just so the horse will pull, then you can apply the invention to it. Of course, this is a little bit more complicated than your illustration.

Q. I do not think that makes any difference. A. But the effect is there.

Q. You say then finally that as long as you get the common hum out of one of these machines, whatever type it is, you have no concern with how that is produced, but merely with an attempt to stop it? A. Yes, sir. We can apply our invention——

Q. That, it seems to me, simplifies the situation very much and I do not see any need of controverting that. Is there any need of that if the owner of the patent himself says that is a fact, if that is all he is claiming, then that is all I am interested in.

Mr. Edwards: I think that is quite true, your Honor, except you have come just almost to what the man is saying if you will permit me to say this for him, that

if you operate that set with direct current you will have no problem in the operation of your loud speaker.

The Court: That is conceded by you. It says in the patent, "For household use", where you have alternating current?

A. Yes, sir.

Mr. Edwards: And if they use an alternating current you will get a hum in two circuits coming from this part (indicating) to this speaker and, his idea, or the joint idea, is in the speaker itself, that if you will reverse these coils in the speaker instead of putting them cumulatively, you will avoid the effect of that hum in the speaker and the hum won't interfere with your signal.

The Court: He has not explained his invention yet. You have not got it up to that point?

A. No, sir.

Q. Now, then, that being true, if all the other testimony would concede, as a preface to any statement——

The witness: Just so you understand there are two circuits coming out of here, both of which have hums, or, rather, one of which has—yes, both of them.

By the Court:

Q. And you produce the two circuits by rectifying an alternating into a direct current by these tubes and other devices? A. Pulsating direct current, not perfect direct current.

Q. Now, then, explain the invention. A. This diaphragm which produces the sound in the air has a little fine coil wound on the cylindrical piece of cardboard that is shown next to that cone and is attached to that cone so that when the coil moves the cone moves, and it is in that coil that the radio signal is put and also some of the hum that comes out of this set goes in there, too. Now, that is free to move. Now, that is made to move by this big coil here.

Q. Can't you open this and let me see it? A. It is a big coil wound on an iron coil.

Q. Can't you open that up? A. Yes, I will try to. And that is 81779.

Mr. Brady: If your Honor pleases, you can see the little coil right through here.

The Witness: The Court wants to see the big coil.

The Court: You will have to take it out here. Here are the bolts.

The Witness: We can try it any way, your Honor.

The Witness: It has another coil of wire.

The Court: This coil all runs around in here?

The Witness: Yes.

Mr. Brady: May I ask the witness if this diagram would help him any in his demonstration (handing diagram to witness).

The Witness: Probably it would. You see, that field winding has a lot of turns of wire, and when it is excited and electricity acts magnetically on this little coil here that I have already pointed out on this diagram, the moving coil——

The Court: You mean makes it jump?

The Witness: Makes it jump back and forth, by the frequency of the sound that you hear, so that when that coil jumps this cone is attached to it, so it has to jump; and, of course, when a thing moves in the air it makes a sound, so it produces the music. This here is merely an exciting coil. This is the voice coil. This moving coil is the moving coil, and the speech, the voice, comes in that coil. It won't move unless there is energy in it; that coil won't move without some electricity going through it, no matter how much electricity you put in this coil, so that when there is nothing delivered by the radio set to that coil, there is no sound; but let the signal come in and go into that coil, then its energy can act on it and make it move; so that if hum goes in that coil and hum goes in this coil, and they are aiding each other, it will make this move and give you a hum in the air; but if the two hums in these coils oppose each other, then one is working one way and one the other, and they both oppose each other, and it does not move.

The Court: Now, then, with that introduction, explain what is the novelty of your idea over what was known before.

The Witness: Well, the novelty is that all sets had hum that come out, and were delivered to this field winding and delivered to this moving coil. There was bound to be hum in both of these coils, because it would be very expensive and almost impossible to make a set that would not give some of that electricity that causes the hum in those coils, so that it was very objectionable to have that hum coming out and spoiling the music; and we found that by proper connections in phasing and relative amplitude to those two hums, we could neutralize them so that the music that would come out would not be neutralized, but the hum would be.

The Court: Well, now, tell me how you did it again? You talked about the coils.

The Witness: Well, we did it by this reversing of either of those two little leads going in, or these two little leads that went to the moving coil; and as shown in our patent we inserted a condenser in series there. The condenser was something that changed the relative amounts of the hum in these two.

The Court: Where is that?

The Witness: That is not shown here. It is shown in the patent. So that if there was too much hum in one to balance out the other, we cut it down, and show that by several means, as the claim shows. We do not specify any particular means, but by these means, one of which is these that I have just pointed out, we were able to balance it out.

The Court: Are they all in there?

The Witness: Yes, this right here shows how the set is manufactured, so they have got to be connected right. You will notice this lead here—I will point that out—it does not reach over to here. They apparently make it short, so that the man that assembles it can not make a mistake and put it together wrong. It is these two leads here. That one won't reach over there.

The Court: When you say leads, you mean what?

The Witness: Wires.

The Court: Is the current simply coming out of the amplifier?

The Witness: That is the current that comes out to energize this field winding, and that is what we reverse to make the hum neutralized, and if that is not connected right, and there is no right amount of hum in both of them, the hum will be present; and in this set it is quite evident that they manufactured it so that the assembler can not put it together so that it would produce hum.

The Court: Well, I do not see that. Where does that lead start and end? Is it on these wires here?

The Witness: Yes, one of these wires here. It happens to be the one that is colored yellow, the yellow lead.

The Court: Where does it ultimately go?

The Witness: It ultimately goes back on this diagram.

The Court: Well, where does that come in here? That is what I want to see.

The Witness: We brought it down to this switch, so that we could reverse it to show the effect. Mr. Lowell will demonstrate that to you. It goes down to this switch and this is the reverse switch, so we could put the yellow lead where the other color was, and the other color where the yellow was, so we could reverse it, to show how, when we changed from what they had, there is hum.

Q. (By Mr. Brady) Referring to Exhibit 92, will you kindly explain further? A. That clarifies it, I think for you. This is the lead that I referred to. That is cut so short that it can not be put over there, because if it were put over there when they assembled it in the factory, it would produce hum; so they purposely made it short, so they could not do that. I think that is the fact. Now, this is the reversing switch that enables you here on this model to put that lead over there, and so that when you do it, you do get hum. That is nothing but a switch that takes this wire here and connects it over here, and takes that wire there and connects it over there. It merely reverses those connections.

Q. Please show us where that is on the board. A. Right here (indicating).

The Court: Well, now, why is that hum produced when you reverse it? A. Because the two hums, one in this little moving coil and one in this fixed coil aid each other, and cause this diaphragm to move badly and produce sound in the air, whereas when you throw this over the other way you reverse the connection and the hum in this coil opposes the hum in that, and therefore the two are acting in opposition, and this can not be transferred to the diaphragm, so that there is no sound in the air.

Q. Will you show how that hum is produced? A. I can demonstrate it here, if you turn it on.

(Set turned on.)

Q. Now, is the set operating normally? A. The set is operating normally now.

Q. How do you know that? A. Well, I tune in a signal here to let you hear it, as soon as it warms up.

(Set operating.)

The Witness: There is a signal on the set. Nothing has been done to set to change its operation.

Q. You mean the set is in its original condition? A. In its original condition now. You will notice there is no hum, and I just tune my dial a little bit off so I do not hear the station. Now, I will reverse these two connections to this coil, and you will hear that low hum that comes out that is objectionable, particularly when you want to listen to it without a great deal of volume, as is often the case. And in the bigger type of speakers, which reproduces this hum more efficiently, it would be louder.

Mr. Darby: Will you tune in the station again now while the hum is on?

The Witness: Yes, sir.

(Operating set.)

Mr. Darby: Mr. Witness, will you say that that hum interferes with the proper reception of that signal?

The Witness: Why, I would say that it interfered with the receiving, as I would run my set at home.

(Set operated by Mr. Darby.)

The Witness: That is the way you would operate a set in the street. I do not run mine that loud.

(Set operated by witness.)

The Witness: That is the way I would run it.

(Set operated by Mr. Darby.)

Mr. Darby: Now, will you please lower the volume control as you would run it in operation with that signal tuned out.

(Set operated by witness.)

Mr. Darby: That is the other one, isn't it?

The Witness: I still hear the hum just as bad if we change it.

Mr. Darby: Will you say that that hum interferes with the enjoyable reception of that signal?

The Witness: Yes.

Mr. Darby: You would?

The Witness: Yes, I would say that that hum was objectionable, and I would rather have a set that did not have it.

Mr. Darby: All right.

The Court: Well, do I understand this to be the sum and substance of your statement, that there is no novelty in setting these wires in this particular way, but the novelty lies in doing it in conjunction with the loud speaker.

The Witness: In conjunction with the loud speaker.

The Court: Wasn't all this known to the art before,—setting the two——

The Witness: But what was invention——

The Court: ——the fields against each other.

The Witness: Not from alternating current. The art had never operated this field coil before from alternating current supply. We were the first to get the power to supply this from—Those sets operated from batteries, and the energy from the batteries went down very rapidly in the old type battery set, and the main energy of the receiving set goes into this coil here, and it was that coil that we supplied with the alternating current, of course after it had been rectified, and it eliminated a very big drain on the batteries; so that there was no one before us, so far as we know, that ever had energized this coil from alternating current source and had the problem to confront them.

The Court: Well, I think I understand that a good deal better than I did.

(Witness then returned to the stand.)

Mr. Brady: The diagram referred to by the witness in the course of the examination and demonstration is offered in evidence as Plaintiffs' Exhibit No. 97.

(Diagram referred to marked "Plaintiffs' Exhibit No. 97.")

The Witness: As to what efforts we made, or what correspondence we had with respect to interesting others in our invention, I will say that we corresponded with the Magnavox Company in California, the only people at that time that made the type of loud speaker that had a field coil. Of course, they excited theirs from direct current; and we naturally thought they would be interested, being able to sell a device that did away with batteries to energize this coil, and operate it from the alternating current; and we wrote them regarding our invention.

I can produce that correspondence. I have it here. It is a letter dated June 10, 1922, to the Magnavox Company of Oakland, California, and also their reply. The date of the reply is June 19, 1922. There is another letter, in which we offered to build them up a model, if they would care to come and see it operate.

My attorney, John B. Brady wrote the two letters I have referred to as dated June 10, 1922 and June 28,

1922, addressed to the Magnavox Company. No, I wrote the letters myself, dated at my address, 2371 Champlain Street, Washington, D. C. The reply of June 19, 1922 is addressed to me. Mr. H. E. Metcalfe, of the Sales Department of the Magnavox Company, signed the reply. I signed the original letters, of which I have presented carbons.

Mr. Brady: The letters referred to by the witness are offered in evidence, and the Notary is asked to mark them Plaintiffs' Exhibit 98.

(Letters referred to marked "Plaintiffs' Exhibit No. 98.")

Mr. Darby: Objected to as irrelevant and immaterial.

The Court: I will admit it.

The Witness: At about the time of our joint invention, we had difficulty in obtaining parts, the component parts that were necessary to make the power amplifier and the loud speaker. At that time we had a great difficulty in getting the parts required for this new device, particularly a rectifier tube. There were no tubes then on the market for low power work. There were very high power tubes, but none for the use which we had for a rectifier tube, and also special transformers which we required, with a multiplicity of special winding and special voltages, were not available, and we were required to design and draw details for these and send them to the American Transformer Company, in order to get them made for our invention, to use in our invention. In our patent the transformer which we asked the American Transformer Company to build is No. 29 in Patent 1,606,212. Those parts are standard today. They were not standard at the time that Lowell and I were working. We wrote to the Westinghouse Company and the General Electric Company, with respect to obtaining a source of rectifier tubes but they were unable to furnish us with what we needed. I am handed two letters, one addressed to the General Electric Company, under date of July 28, 1923, and a reply by General Electric Company, dated August 3, 1923, and say that the one dated July 28th is one written by my attorney, Mr. Brady, asking them—asking the National Lamp Works

if they would quote on these special tubes for rectifying; and their answer of August 3rd to Mr. Brady stated that they had no tubes of the type we wanted, but they did say they had some of the higher power tubes, that would not serve our purpose.

Mr. Brady: The letters dated July 28, 1923 and the reply of August 3, 1923, by the General Electric Company, are offered in evidence as Plaintiffs' Exhibit No. 99.

(Letters referred to marked "Plaintiffs' Exhibit No. 99.")

Mr. Darby: Merely for the sake of the record I make the same objection.

The Court: Same ruling.

The Witness: I am handed two letters, one dated July 28, 1923, addressed to the Westinghouse Lamp Works, and a reply dated August 3, 1923, by Westinghouse Electric & Manufacturing Company. These are letters written by Mr. Brady relative to getting the special rectifier tubes and the reply by the Westinghouse Company, or the Westinghouse Lamp Works, stating that they could not furnish the type we desired.

Mr. Lowell and myself granted licenses to others to use the invention comprising the power amplifier and loud speaker of Patent 1,606,212. We granted a license to Grigsby Grunow Company and the Brandes Company.

Mr. Brady: The letters referred to by the witness, dated July 28, 1923, and the reply of the Westinghouse Electric and Manufacturing Company, dated August 3, 1923, are offered in evidence as Plaintiffs' Exhibit 100.

(Letters referred to marked "Plaintiffs' Exhibit No. 100".)

Mr. Darby: Same objection.

The Court: Same ruling.

The Witness: I am handed documents entitled license to Brandes Products Corporation, dated October 1, 1927. I find my signature thereon, and it is the license agreement which we drew up with the Brandes Products Corp-

oration. The license was executed. That is, the license was granted. The Brandes Products Corporation manufacture under that license. They made many thousands of sets under this license. I mean sets embodying our invention of Letters Patent 1,606,212. That is the power amplifier and loud speaker.

As to whether I have this confused with the invention of the two other patents, 1,455,141 and 1,635,117, I will say that we granted them licenses under those, too. There was a license under Letters Patent 1,606,212 to the Brandes Products Corporation.

Mr. Brady: License agreement referred to by the witness is offered in evidence as Plaintiffs' Exhibit 101.

(Paper referred to marked "Plaintiffs' Exhibit No. 101".)

The Witness: I am handed a license agreement executed November 18, 1927, with Grigsby Grunow & Hinds Company. This is an agreement which we made with Dubilier on Patent 1,606,212, with the Grigsby Grunow Company. That is the patent relating to the power amplifier and loud speaker. That license was executed. The Grigsby Grunow Company manufactured under that license. They made many thousands of sets under this license. I have a representative sample of such a set. We have one here. I will step down and identify the set.

(Witness leaves the stand and goes over to set.)

The Witness: This one here (indicating). It has the statement on it that it was built under license under Dunmore & Lowell patent. I will read the statement. It says, "License under Lowell and Dunmore patents, patents and application of Hazeltine Corporation, and P. R. Mallory & Company, Inc., and Magnavox Company." This is the leaflet of instructions of how to operate the set, which came with each set.

The Court: Now, I do not quite understand that. You say that is one of your sets.

The Witness: Made under our patents, along with other patents, of course.

The Court: I thought you said you did not have one.

The Witness: That was yesterday.

Mr. Brady: I do not think we said that. I think counsel on the other side made that statement. We have produced a set under the patent, and it is here.

The Court: I have had a demonstration for the last half hour on the other machine.

Mr. Brady: To show the infringement of the defendants' machine.

The Court: I asked to be shown the alleged patents, and I was told when I stood down there that you did not have one to show me, but you could show the same thing on the defendants' set. Isn't that a correct statement?

Mr. Darby: That is the statement, if your Honor please.

The Court: I do not want to go over it all again. You now say you have got what?

Mr. Brady: Yes?

The Court: The statement was made to me yesterday and today that you did not have one, and therefore you would like me to look at it on the defendants' device, isn't that true?

Mr. Brady: Not as I understand it, your Honor. My understanding is——

The Court: If I made a mistake, I want to be corrected. But isn't that what counsel told me?

Mr. Edwards: Not quite that, I think, your Honor. Mr. Darby——

The Court: Certainly I was told when I made the direct inquiry or statement that I did not want to see the alleged infringing device until I saw the plaintiffs' device, and I was told the plaintiffs did not have a set here that they could properly demonstrate it on.

Mr. Edwards: That was quite true yesterday, your Honor; and the reason the demonstration was made with respect to the defendant's was because that is opened up and we could reverse the coils. The statement today is that a number of those devices were made under the

patent in suit, and so one was brought over last night; and so far as physical properties are concerned, outwardly they appear alike, but in order to show whether or not the coils are reversed one must take the coils, cut the wires and make the reversal.

(Witness then returned to the stand.)

Mr. Darby: If the Court please, the plaintiff and the patent owner do not and never have manufactured and sold radio receiving sets. The set that they produce now has been manufactured by a licensee of theirs under this patent in suit, and some twenty-seven other patents and applications for patents, and your Honor is perfectly correct. The statement was made to you that they did not have one of their sets. They have not got any sets. Now, they come today with a licensee's set, manufactured under this patent, they say, plus the twenty-seven other patents and applications for patents under which they granted a license, as shown by the license agreement that they have put in evidence.

The Court: Well, if the loud speaker is in there under the license agreement, that would not make any difference, would it?

Mr. Darby: Well, it does not show that they employed the invention of this patent any more than the defendant does, for example.

Mr. Brady: We are prepared, your Honor, to make a demonstration of the apparatus we have here, that the invention is employed in the set.

Mr. Darby: The mere fact that you present it as a licensed set, an apparatus made under the Patent, I presume that you will contend and do contend that it contains the invention of the patent,

Mr. Brady: Of course, we propose to demonstrate that, Mr. Darby.

Mr. Darby: Fine. Whether you demonstrate it or not we will accept it.

Mr. Brady: We will demonstrate it.

Mr. Darby: Just a minute, all we want you to do is prove your case.

The Witness: I will step down and demonstrate the Grigsby Grunow set, manufactured under the license that I referred to, November 18, 1927. I will go through the same demonstration as I did with the other set. I will tune in a signal, and then turn it down low, and then I will reverse the windings, just as I did with the other set, and it will be noted that there will be hum present.

(Set put in operation.)

The Witness: Throw the switch one way and you have the hum, and the other way it is quiet. This is merely one representative set of various Grigsby Grunow sets. There has been no special effort to pick this set out of many others. It was picked at random from one of the men that happened to have one.

Mr. Brady: I offer license of November 18, 1927, to the Grigsby-Grunow-Hinds Company, as Plaintiffs' Exhibit No. 102.

(Paper referred to marked "Plaintiffs' Exhibit No. 102.").

Mr. Brady: The Grigsby-Grunow set referred to by the witness and demonstrated by him is offered in evidence as Plaintiffs' Exhibit No. 103.

(Set referred to marked "Plaintiffs' Exhibit No. 103.")

Mr. Brady: Witness excused.

Mr. Darby: No cross-examination.

The Witness: I just want to make one statement, that I do not recall hearing your Honor ask if we had one present today. I know yesterday you asked if we had one present.

The Court: Well, I do not know whether I asked again today, because I was told yesterday that you did not have one.

(Examination of witness concluded.)

Mr. Edwards: I offer in evidence the bread board model that was refetred to yesterday by Dr. Lee, and upon which he made a demonstration. I will ask to have this model marked "Plaintiffs' Exhibit 104."

(Model referred to marked "Plaintiffs' Exhibit 104.")

Mr. Edwards: I will also offer in evidence a letter written by plaintiffs' counsel on August 5, 1933, to the defendant Baltimore Gas Light Company; and I understand that it is admitted that such letter was received at or about the date of the letter. The letter is the usual formal notice of infringement. That would be 105.

(Letter referred to marked "Plaintiff's Exhibit 105.")

Thereupon PERCIVAL D. LOWELL, a witness of lawful age, produced on behalf of the plaintiffs, having been first duly sworn, testified as follows:

Direct Examination.

By Mr. Brady:

The Witness: I am the joint-inventor with Francis W. Dunmore, named in Letters Patent 1,606,212. This invention refers to a power amplifier and loud speaker. I have records to establish the time Dunmore and myself made this invention.

Mr. Darby: I think we conceded that. That has been conceded, Mr. Brady.

The Witness: I prepared an official report for the Department of Commerce, relating to the invention I made with Mr. Dunmore on the power amplifier and loud speaker. There was a circular, an official circular which I wrote, covering this subject. I can produce a copy of that circular. The title of the circular is "Scientific Paper of the Bureau of Standards, No. 450." It is dated October 2, 1922. The invention of Mr. Dunmore and myself is disclosed in that circular in the diagram on page 350.

In Plaintiffs' Exhibit No. 91, I can show you the condition of the hum energy in the output system of that set by operating the receiver.

Q. Will you please do so?

The Court: Now, is that necessary?

Mr. Darby: He has done that twice.

The Court: That is just going over what has been done before.

Mr. Brady: No, your Honor, this is quite a different test. He made a test with regard to the voice coil and the field coil and the electric dynamic speaker. This witness proposes to show the condition of the hum energy in the output system of the set, the main filter.

The Court: I do not understand you.

Mr. Brady: The prior witnesses have told us that existing in this main field coil there is a ripple, an alternating current component. That has been shown by reversing the field coil. Now, how does the alternating current get into the coils to be neutralized? There must be alternating current coming from that set; so I am asking this witness to show us——

The Court: Well, we eliminated that in the discussion this morning, didn't we?

Mr. Brady: Why, I do not believe so, your Honor, because there must be some hum energy there.

The Court: Well, that is assumed, and that is why I asked those various questions, and kept coming back all the time to that premise; and I understand it has been accepted by all parties concerned,—and it does not make any difference how you produce it,—that the alleged novelty relates to a situation where you have already produced it, so I am not concerned with going into that at all.

Mr. Brady: Then, may I consider that we are agreed that if we tested the output of this receiver we would find a large volume of hum energy.

The Court: Well, I understand that that is the only purpose of the invention, to apply the loud speaker to a set where you do have the hum. That is what Mr. Dunmore has just been telling me for the last hour, unless I am wrong.

Mr. Brady: The test that Mr. Lowell is about to make will show, without any doubt, that that is the case. Then, it is understood that the hum, when it gets into the loud speaker must come from the receiving set, and if we

made this test we would hear a loud hum from the receiving set.

Mr. Edwards: You mean the defendant's set?

Mr. Brady: In the defendant's circuit.

Mr. Darby: Yes, as set up on your table there.

Mr. Brady: Yes.

Mr. Darby: Yes, as set upon your table.

Mr. Brady: Then, do the counsel concede that point?

Mr. Darby: As you set it up on that table, there is no question that you get hum out of the last, output of the apparatus part as distinguished from the receiver part.

The Witness: This Stewart-Warner model No. 109 is in no different condition now than it was when I originally received it, except the addition of the switches and the associated wires which I put on. So far as I know, there was no effort made to select some specific Stewart-Warner Model No. 109 set. It is just a general run-of-the-mine set as far as I know. I did not do anything to the set which would inject hum into it. As to whether it is set up any differently here than it would be in the ordinary way. I will say that it is different only in that in the ordinary way it is assembled in the cabinet. Here we have assembled it on a board. This device here (indicating) is the cabinet in which the receiver was assembled when I received it.

Mr. Brady: Referring to Exhibit 82.

The Witness: I took the chassis out of the cabinet. After I took it out I mounted it on the board, as shown there, and brought out the leads in various parts. I did not do anything to disturb the circuit of that set which would introduce hum into the circuit.

As to whether I can give some simple analogy to the problem that we have been trying to solve in our minds to explain this invention, I would like to try to show by a very simple mechanical analogy on the blackboard, if your Honor is not quite clear——

The Court: Turn the other side of the board around.

(Diagram drawn on blackboard by witness.)

Mr. Brady: If I may interrupt, I will offer in evidence as Plaintiffs' Exhibit 106 the Bureau of Standards Scientific Paper No. 450, referred to by the witness.

(Paper referred to marked "Plaintiffs' Exhibit No. 106.")

The Witness: This diagram represents a combination of moving pistons and springs. I will mark this one piston over here P-1 and this piston rod on the right I shall call P-2. These pistons are arranged so that they may be actuated either simultaneously or independently, to give the backward and forward motion as indicated by the arrow above the pistons. Connected with these pistons are two springs, which are joined together in the center. And at the center we have what we call an indicator. I will mark that "I". This indicator is attached only to the center of the spring, so that it is free to move backward and forward. In the condition where the two pistons P-1 and P-2 are at rest, the indicator then, of course, will rest on a point which we will call zero. Now, if we start the machinery which operates piston P-1 and moves it back and forth, the motion of the piston P-1 is transmitted through the spring, S-1, and causes the pointer, the indicator, I, to move from the zero position to a position to the right, to cause it to fall in a positive direction, and we will assume it moves over to the point which we will call ten units of motion. Now, if we stop the movement of piston P-1 and start piston P-2 reciprocating, we get the same effect through the spring S-2. In this case the indicator moves from the zero point in a negative direction in equal amount, which we call ten units of motion. Now, we operate both pistons simultaneously, P-1 and P-2, but in such manner that they are synchronized, they are in phase, both moving in the same direction at the same time. With that condition the indicator will move between the two extreme positions, so that we get a total of twenty units of motion. Now, again, if we move both pistons simultaneously, but in opposite directions, the force exerted through the two springs is equal and opposite, and we get no motion of the pointer; it remains at zero. Now, that represents exactly what happens in this patent. The motion of the piston P-1 can be compared to the hum current which is

generated in the field winding of the speaker; and we can call P-1 speaker hum. And the motion of piston P-2 is analogous to the motion of the hum current received from the receiver itself, the amplifier; so we can call that receiver hum. Now, the indicator in this case being acted upon by the two forces is analogous to the moving coil of the speaker. We will call that moving coil. Now, I think it is very simple to see that we have two hum currents, one generated in the speaker itself and the other from the receiver, both acting simultaneously upon the moving coil, and if properly phased in relation to those two hum currents, they will either add up and produce twenty units of hum, or connected properly, as disclosed in our patent, they will cancel out and produce zero units of hum.

The Court: Is that akin to the same principle in a telephone, the ear-piece?

The Witness: Somewhat, but the telephone receiver is an entirely different electrical construction than a loud speaker.

The Court: Why doesn't it have the same problems? You have the current and you have the voice.

The Witness: In a telephone receiver, it uses a permanent magnet instead of an electro magnet. That is the magnet. But instead of the magnet having permanent wiring on it, it is a horse-shoe magnet. That is, in a telephone receiver you do not need as much power, you do not need to reproduce the voice as loud as you do in the loud speaker.

By the Court:

Q. What I mean, is the principle the same, having one energy offset the other? A. No, sir, you can not do that with a telephone receiver because the telephone receiver operates without the use of any external power. That is, you can not introduce any hum in the telephone speaker. If you take a telephone receiver and connect it on the hum of the defendant's output, you would get a receiver hum only. You can not introduce any hum to the telephone receiver.

The Court: Well, I will take your word for it, but I know that if you put the ear-piece to your ear you have

the sound of the voice coming in and also you have the hum magnified so you can hear it. Now, what I was asking you was, isn't it the same problem they had to deal with in the early telephone invention days to eliminate the hum?

A. Why, I am not prepared to enlighten you very much on the early telephone practice, sir. I do not think they have hum problems in the telephone service. I may be wrong.

The Court: Well, I understand your idea of it. Have you finished with Mr. Lowell?

By Mr. Brady:

Q. Does a telephone normally use direct or alternating current? A. Direct current. I mean it is a direct current device instead of an alternating current device.

(No cross-exa... n.)

(Examination of the witness concluded.)

The Court: Does that conclude the plaintiffs' case?

Mr. Edwards: Not quite, your Honor. It is stipulated that a reproduction of the drawing made by the witness Lowell may be made and is hereby made and offered in evidence as Plaintiffs' Exhibit 107.

I hereby offer in evidence as Plaintiffs' Exhibit 108, "Instructions for care and operation of the Majestic screen grid radio receivers August, 1931", referred to by the witness Dunmore.

Before closing our case, your Honor, in order that it be clear on the record, I desire to renew our offer to call witnesses and introduce the proof of the facts as set forth in the memoranda already filed with the Court and the exhibits accompanying that memoranda, as the understanding the other day was that the witnesses would not be allowed to testify. I desire at this time to make my formal offer.

The Court: That has relation to the other patents?

Mr. Edwards: Precisely.

The Court: Well, I have already ruled on that. Why do you bring it up again? I do not quite understand it.

Mr. Edwards: Because, to be frank, your Honor, I am not quite clear as to just where we stand on the record, and I would like the record to show that at every opportunity we have sought to introduce this evidence, and I take it from what your Honor says now, that it is excluded, and, if so, I would like to have my exception noted.

The Court: Very well.

Mr. Edwards: And may I ask to have that document and the exhibits marked under the Equity Rule No. 46 to show my offer?

The Court: You have made that offer and I told you you could have an exception and I would pass later on whether that ought to be made a part of the record.

Mr. Edwards: I understood yesterday there was some question made as to whether that was during the trial or before the trial, and not being certain myself as to what view ultimately would be taken of that situation, I make the offer now.

The Court: All right, sir.

Mr. Edwards: And in that connection I again ask that the documents be marked under Rule 46.

(Proffer marked "Plaintiffs' Exhibit—Evidence Offered under Rule 46.")

The plaintiffs rest.

(Evidence on behalf of the plaintiffs concluded.)

DEFENDANTS' CASE.

Mr. Darby: May it please the Court, to enable an understanding of the defendants' position in this case, in view of the fact that our evidence is almost entirely stipulated in, from the previous trial, there is just one little element of scientific fact that I would like to explain to the Court to enable a clear understanding of the particular inventions here involved.

The Court: Might I interrupt you right there? It is stipulated—what is the nature and extent of it?

Mr. Darby: It is the evidence that was given in the prior trial pertaining exclusively to this patent in suit.

The Court: Didn't it bear upon anticipation?

Mr. Darby: It bore upon anticipation, want of invention, and non-infringement. The receiver before the Court, the loud speaker before the Court in the previous trial before Judge Morris, which was held not to infringe, is the same as the receiver of the defendants in this case with one very slight difference, and I will explain to your Honor in just a minute what that difference is. I will tell it to you very briefly now and then come back to it. In the defendants' speaker the Radio Corporation's loud speaker known as No. 104, they employed the same instrumentalities that the present defendant does with the exception that in addition the Radio Corporation had what is referred to copper discs. These little copper discs were put into the loud speaker arrangement to act as what was there termed a shield. It was because of the use of these little copper discs that in that case the plaintiff contended infringement occurred. In this case we do not use the copper discs, so that our position is that the one thing that they relied upon to establish infringement in the Radio Corporation case we do not use, which brings the question of infringement even further away from what it was in the case before Judge Morris.

The Court: Does the Court stress that point?

Mr. Darby: I think so. I was going to, in just a minute, call the Court's attention to a short passage from the opinion of Judge Morris and explain it as I went along.

The Court: All right.

Mr. Darby: I first wanted to get in layman's language, and make homely analogies, if possible, to explain just what the invention here is concerned about. Every sound that we utter or hear is a matter of vibration. Your Honor will undoubtedly recall in your early school days you hit a tuning fork and you would get a note. Now, that note that you heard was nothing more or less than the vibrations that the tuning fork had. When I talk my larynx causes vibrations in the air and those vibrations go through the air and impinge upon your Honor's ear drum and the same vibration occurs in your

Honor's ear drum that occurred in my larynx and that is why you hear it. Anything that vibrates a certain number of times per second within the audible limit, as it is called, you will hear. The audible limits are generally accepted as lying between 16 vibrations a second, which is the lowest note that human ear can hear, and approximately 15,000 vibrations per second, which is the highest note the human ear can hear.

Now, when you talk into a telephone transmitter your larynx causes air vibrations which impinge upon the little disc that you see in the telephone transmitter and causes that disc to vibrate in accordance with the air vibrations that your larynx has caused. The vibration of that little disc alters an electric current and makes that electric current flutter, if you please, in accordance with the vibrations that have originated in your larynx. Now, that electric current flows over the wires and with the flutter in it until it comes to the receiver of the one to whom you are talking in that receiver—if you have ever examined your telephone receiver you will find that it likewise has a little metal disc—that metal disc is actuated upon by a magnet and this electric current that is fluttering electric current flows through that magnet and that magnet attracts that disc more or less depending upon the flutter of the electric current, so that that disc in turn vibrates just exactly the same way that your transmitter disc vibrated, and that vibrates the air and consequently you get the sound that you hear.

A radio receiving set operates exactly the same way. At the broadcasting station they are transmitting wireless waves. The only difference is instead of running over a wire they go through the ether, the air, and these wireless waves are caused to flutter by the music, speech or signal, whatever it may be, that is to be sent by wireless. These currents flutter which is a modulation, as we say, of the current that is constantly being sent forth. These waves flowing through the air, going through the air, impinge upon an aerial, the antennae, and they follow that antennae right down to the ground, but in going down through that antennae they encounter a coil, nothing but a wire coiled around something, or around air, for that matter, which is part of a transformer, and when current flows through that coil it induces, we say, but you can visualize it as jumping from one coil to another,

current in a second coil, which is connected to your radio receiver. It is in as a part of your radio receiver. So depending upon how strong the signal was, how strong this wave was when it left the transmitting station, and likewise depending upon how far away your receiving set is and, perhaps, other conditions with which we are not concerned, that current, this fluttering current, corresponding to the original sound wave, is received by your radio receiver and led into the receiving set itself, but it is awfully weak—likewise it is high frequency current—so it is acted upon by the apparatus of the receiver, the vacuum tubes and other instrumentalities in there, to make it stronger and to put it in a condition to ultimately come to the loud speaker in the form of a fluttering current which is exactly similar in character to the fluttering current that is received at the disc or the magnet, rather, of your telephone receiver that you hold to your ear.

Now, that is a very brief and simple explanation of radio transmission. This patent is concerned only with the fluttering current that comes out of the apparatus to be led to the disc or loud speaker. The loud speaker of a radio instead of being the disc in the telephone receiver is a piece of parchment, stiff board, cardboard, stiff paper or something of that nature, usualy in the shape of a cone, because it has been found that a cone is best adaptable to reproduce the vibrations in the air in the form of sound.

Now, the current, this fluttering current that ultimately reaches this loud speaker is still very weak. It is desirable, it is advantageous to make it stronger. Therefore, instead of using a permanent magnet for controlling the movement of the cone in reproducing the sound wave vibrations, they use what they call a dynamic speaker, with which this case is involved, which is nothing more nor less than a magnet which is not permanent, but is made into a magnet only when electrical current is flowing through it. That is called an electrical magnet. Therefore, to get this amplifying effect—it is nothing but a booster,—and they use an electro magnet and energize it directly from your electric lighting circuit. That is what they have referred to in this case thus far as the field coil, the fluttering current finally reaches that coil,

moving the cone back and forth, that is called the speech coil.

Now, if your Honor will refer to the patent, figure 1 of patent 1,606,212, your Honor will see the speech coil 9. That is the coil to which the fluttering current, which has been made to flutter by and in accordance with the original speech or signal, that coil is connected directly to the cone of the loud speaker.

The Court: Now, wait; I do not see that here.

Mr. Darby: The coil 9, the loud speaker—the cone of the loud speaker is not shown in the drawing.

The Court: It does not appear to be connected with any.

Mr. Darby: I know it. That is true, your Honor. But that coil 9 is intended to be, and I believe it is a reasonable conclusion from the patent itself—it is described as being connected directly to the reproducing device, the cone; there is no question about that; there is no dispute about that. So that fluttering current which contains the signal ultimately reaches coil No. 9. Now, to secure magnified effect, amplified effect, a field, 10, is employed and energized from a source of alternating current. The current that reaches the field coil, 10, is alternating current. Alternating current reaching the coil 10 would be bad. Therefore, they pass it through a rectifier, which takes this alternating current out, which consists one moment of positive electricity, the next moment of negative electricity, the next moment of positive electricity, and so on. This rectifier cuts that in and off, and utilizes all of the positive components, but not the negative, or vice versa. It could use all of the negative components and not the positive. If you will visualize the current, the alternating current is being in this form (indicating on drawing on the blackboard). Here is the zero line. The alternating current swings like a pendulum. Above the zero line it is positive, and then it comes down to zero, and negative, and goes back to zero, and goes into positive, and so on. Now, when you rectify that current, you only use one component, either the positive or the negative; and let us say we will only use the positive component; we will just erase the negative component. And that is what you have got. And your

Honor will see that instead of having a continuous current you have intermittent current. It is what they call pulsating current; just like turning on and off the tap water faucet; you get a glob of water, and you turn it off and you get nothing, and you turn it on again and you get some more water. And that is just what a half wave rectifier does. It is direct current, but it is pulsating intermittently; at first a glob of electricity, nothing, a glob of electricity, nothing, and so on.

Now, you must use direct current for energizing the field coil 10. Therefore, the patentee rectifies half of the alternating current that he gets from his electric light mains and gets his intermittent pulsating current, which is bad, because, if you get that intermittent pulsating current, you are going to get your 60-cycle hum. Now, your Honor will notice that he does nothing. Nothing is shown, and nothing is described in his patent. He puts nothing between the rectifier and the magnet 10. There is, of course, the fluttering current in the circuit of coil 9. Therefore—and this constitutes the sole invention of the patent, if you please—therefore, he says I am going to recognize that there is a 60-cycle hum, there is alternating current or pulsating current in the circuit of coil 10, which flows through that coil, and there is likewise a 60-cycle hum in the circuit of coil 9, which flows from that coil; and he says, "I am going to suppress, I am going to correct my system so as to eliminate that hum." In other words, it is a method of cure. He says, I am going to allow it to be there, and then do something to counteract it. So, if we have two coils, which I will show that way, (drawing diagram on blackboard), connected with each other, and I pass current this way, in both coils, their effects will be additive, they are added together; but if I—and this is another analogy such as was used by Lowell—if, however, I cause the current in the upper coil to move this way, and the current in the lower coil to move in the opposite way, they are going to buck each other and neutralize each other. Now, therefore, the invention of the patent, and the sole invention of the patent is in connecting the terminals of either one of those coils 9 or 10, in such a way that they oppose each other; the currents flowing through them are in opposite directions with respect to each other, so that they neutralize the hum effect; in other words, they allow the hum effect to be present, and after once present they

provide that particular circuit connection to buck it out, to oppose each other, to neutralize that hum, from which your Honor will see immediately that if anybody took exactly this arrangement here and connected those coils, so that they did not oppose each other, there would be no infringement. If they connected the coils so that they did oppose each other, according to the plaintiff, there would be an infringement. And if your Honor will refer to any one of the claims, let us take claim——

The Court: The Court in the other case took two.

Mr. Darby: All right, sir, we will take two. The only element that we need to consider is the last one. It calls for a loud speaker reproducer connected in the output circuit and field winding, and circuits for supplying rectifying current to said output and field winding, "Said windings being connected in such relation that disturbing current effects in said loud speaker reproducer are substantially eliminated."

Now, the only such connection, being connected in such relation—the only relation that is described anywhere in the patent for those two coils 9 and 10, which would accomplish that result is by having them opposed to each other; and that, of course, is entirely consistent with the evidence that has been given.

Claim 3, for example, is even more specific. The last element is, "Said windings being so connected with said means as to substantially oppose the effect of disturbing currents in said loud speaker reproducer."

Now, with that in mind, let me tell your Honor what the defendant's receiver is. The defendant's receiver eliminates hum in an entirely different way. Instead of using the method of cure which necessarily implies allowing the hum to be present, and then wiping it out, it is using what is—and your Honor will undoubtedly recognize the phrase, because it is used in the opinions—it uses the method of prevention, which does not permit the hum to get into the circuit leading to the field coil. And I will tell you how they eliminate it; it is exactly as the Radio Corporation loud speaker does. The defendant uses what is called a filter. It puts in the circuit—well, first, let me say this: Instead of using a half wave rectifier, such as the plaintiffs' patent shows, it uses a full

wave rectifier. In other words, it uses not only the positive component of the alternating current, but it also uses the negative component of the alternating current, so that the current that it gets fills in this gap between the other tube. That is the first vital difference. The second vital difference is this: We use a filter. After we get this rectified current, both the positive and negative components, we pass it through a filter which smooths out, cleans out all hum. I can compare that filter, for example, to give a homely analog, to purified water coming out of the top of the faucet. You put a wad of cotton above the outlet of a water faucet, so that all the water comes through there, and the water that you finally get in your drinking glass is pure, because the cotton has taken out all of the impurities. That is the method of prevention. The method of cure would be to allow the poisoned water to get into the drinking glass, and then pour some chemical in that drinking glass, which would kill the poison or counteract the poison. That is the method of the patent, the method of cure. A filter, an electrical filter, consists of condensers, resistances, inductances, such, for example, as the witness Dr. Lee referred to in connection with the Hull Patent, a patent owned by the General Electric Company, under which the manufacture of defendant's radio receiver is licensed. That takes this alternating current, eliminates the hum, so that when it passes finally to the loud speaker it does not make any difference whatever whether the phase of one coil is the same as or opposed to the phase of the current in the other coil.

The Court: Well, now, isn't that contrary to what the inventor said?

Mr. Darby: It is flatly contrary to what the inventor said.

The Court: I mean you are now bringing in the set which they said had nothing to do with their invention.

Mr. Darby: Oh, no, sir, oh, no, sir. I am confining myself right straight through to this same two coils, 9 and 10 of the patent in suit, referring to the corresponding coils which we use in our loud speaker, and which they do not claim, if the Court please, that there is anything in this set-up novel except to so connect those two coils, and each of which are old in the art and old in that

connection—except to connect them when current flows through both of them, which will flow in opposite direction instead of the same direction, thereby eliminating the hum.

Now, we use exactly the same arrangement, but we interpose between this rectifier, 14—we use a full wave rectifier—we interpose between that rectifier 14 and the field coil 10 a filter system, which your Honor will see—may I pass this up to your Honor—I call your attention to the device marked—this is Plaintiffs' Exhibit 95, or a copy of it—the devices marked 8-A (handing to court). That is a diagrammatical illustration of what is known in the art as a filter, for the purpose of smoothing out any undulations, any fluttering that may exist in the circuit. That is what we use. That is what the Radio Corporation of America used. And that is what the Court held completely avoided this patent as operating on an entirely different principle. In other words, we kill the hum at the source. They permit the hum to be there.

The Court: Well, how could you say you kill it at the source.

Mr. Darby: We kill it at the source in the rectifier, if your Honor please. We use alternating current; everybody does. But when we pass that current directly from the lighting mains to the rectifier, just like everybody does—from the rectifier to the loud speaker is direct current, but that direct current has been so completely cleaned up by this filter, the impurities have been wiped out, that the minute the current is going from the apparatus, as your Honor calls it, to the loud speaker, at least to the field coil of the loud speaker, it is pure direct current; and we can demonstrate it to your Honor and will demonstrate it very, very simply.

The Court: Well, let me see if I understand you. You are not differing with the plaintiffs on the point that if they have any patentable novelty it lies solely in their loud speaker.

Mr. Darby: No, sir, that is——

The Court: You contend that was novelty, or, rather, that you accomplish what they accomplish in another part of the apparatus.

Mr. Darby: We accomplish——

The Court: And that, therefore, it does not infringe, if you do it in the rectifier and they do it in the loud speaker. Do I understand you right?

Mr. Darby: No, sir, that does not exactly correctly state it. I can restate it this way. We accomplish the same result that they do in an entirely different way, and not in the specific way that their patent is expressly limited to, by its very terms, and by the prior art.

The Court: Well, not only in the way, but in the place.

Mr. Darby: We do it in a different place, absolutely, that is correct.

The Court: That helps me to understand it.

Mr. Darby: We do it in an entirely different place, we do it at the rectifier, and they do it up at the loud speaker itself, that is correct, your Honor.

The Court: Well, that is just what I said, isn't it?

Mr. Darby: I misunderstood you. I agreed with you fully.

Now, with that understanding, might I call the Court's attention, and perhaps explain very briefly a short excerpt of Judge Morris' opinion, and before I do that, let me say this, from the file history of the patent, this patent application was applied for, and a number of claims presented, and all of the claims were rejected. Then, in March, 1926, four years after the patent application had been filed, they inserted for the first time, if you please, the very thing that they now claim is the invention; and Judge Morris says in connection with that, if your Honor can follow me——

The Court: Yes, I can follow you. I think I have it. It is the paragraph beginning with "Regardless of the fact".

The Court: Paragraph "Regardless"——

Mr. Darby: Beginning with what, your Honor?

The Court: "Regardless of the fact"?

Mr. Darby: No, sir. I was starting—I am reading from the opinion as it appears in the Appeals record and the part that I have is, "Defendant contends"——

The Court: The opinion in the Appeals record?

Mr. Darby: Yes. I have not the Federal Reporter here.

The Court: I thought you meant the Court of Appeals. I did not understand that because the case did not go up.

Mr. Darby: Judge Morris rendered just one opinion on all three.

The Court: Go ahead.

Mr. Darby: The paragraph begins, "Defendant contends that the amendment was and is"——

The Court: I have it.

Mr. Darby: It is the sentence immediately preceding that, your Honor: "In addition the patentees pointed out by amendment of March 27, 1926, that pulsations in the field winding and in the armature circuit are opposite in phase and that there is a consequent tendency for the disturbing pulsations to offset and neutralize each other."

Now, that is what they here advance as the invention as well.

The Court goes on: "The defendant contends that the amendment was and is invalid in that it contains new matter and was made about six months after defendant's loud speaker went on the market. It further contends that the claims are based on the amendment and that they, too, must fall not only for want of proper foundation in the specifications but also because of anticipation by Pridham and Jensen's patent"—to which I will refer a little later—"and because, if they are not limited by phase opposition, they are merely for an amplifier, old per se, aggregated with the old Magnavox loud speaker. Defendant likewise urges that its loud speaker is not within the scope of the claims when properly construed. Plaintiff takes the position that the amendment did not introduce new matter in any invalidating sense in that,

as they assert, the amendment was in effect but an explanation of the theory upon which the device operated or functioned in part. They further contend that the claims in issue even if construed to include phase opposition are not anticipated by the Pridham and Jensen patent; that since other claims not in issue are specific to phase opposition the claims in issue should not be so construed to be limited by phase opposition, but that howsoever construed, defendant's loud speaker comes within them."

Now, that, I think, summarizes the identical issues here before the Court, and if you will skip—I do not want to waste too much time reading it—the Court suggests claim 2, cities the fundamental proposition of law that the claims can not be given a construction broad enough to confer upon the patentees a right to the exclusive use of alternating current for producing their result, citing O'Reilly vs. Morse, 15 How 62.

Then says: "Separately considered, both the amplifier and the loud speaker were old. Skin effect and impedance, which includes reactance and resistance, were known inevitable consequences of the energization of field coils of the Magnavox type by pulsating current."

Translating that, that means jus this, that any inductance acts to smooth out a current and eliminates the fluttering or pulsations. That is referred to as skin effect. Impedance is an electric constant. It might include a reactance or resistance or something of that nature. And then the Court goes on: "In view of the lack of novelty in the amplifier and in the loud speaker, separately considered, and of its failure to find any cooperative effect set out in the specifications, the Patent Office rejected all claims. Thereafter the patentees amended by adding the matter now appearing in lines 65 to 79 on page 2 and in lines 24 to 33 of page 3 of the patent." And those lines, if the Court pleases, are the lines in the patent specifications which describe the thing that the inventor now tells the Court is the invention of the patent, namely, putting the two coils so that current will flow through in opposite direction so that they will buck each other and neutralize each other. That is what was injected into the application and into all of the claims four years after the application was filed, and after the Radio Corporation's Loud speaker No. 104 was on the market.

Then the Court goes on: "All claims were likewise amended. As a consequence of these facts and actions, all claims must be held to include and be limited by the interaction or cooperation disclosed in the amendment."

In other words, the Court there holds what plaintiff apparently is quite willing to accept now, that the invention of the patent is in opposing the phase, opposed phase, in these two coils 9 and 10.

Then the Court goes on: "If these claims were anticipated by the Pridham and Jensen patent, or in the amendments, the keystone of the supporting arch for the claims, contained new matter in an invalidating sense, the claims must, of course, fall, but as I can find no infringement by defendant's loud speaker of the claims when limited by phase opposition, it is unnecessary to pass upon the validity of the claims."

Let me hesitate there to briefly comment on this Pridham and Jensen patent.

The Court: Why not take up one thing at a time?

Mr. Darby: All right, sir.

The Court: I am certainly not disposed to do more than the Court in Delaware did. If I understand your contention it is that you have a different device, just as they had in Delaware, therefore, that your contention is non-infringement. If you can satisfy me on that, that is as far as I am going. That is as far as the Court went in Delaware.

Mr. Darby: I am going to satisfy your Honor on that, I believe.

The Court: That is as far as I ever go in these patent cases unless there is something unusual involved. Why not stick to the question of infringement first and get that out of the way?

Mr. Darby: I will. Then I will continue on this. I have just got a little more to read from Judge Morris' opinion: "Plaintiffs expressly concede that there is no Cooperation between defendants' amplifier and loud speaker to neutralize or eliminate directly by phase opposition the hum producing fluctuations."

The Court: Where is that?

Mr. Darby: Right where I left off reading before. It begins: "Plaintiffs expressly concede that there is no cooperation between defendants' amplifier"—does your Honor find it?

The Court: Yes.

Mr. Darby: —"and loud speaker to neutralize or eliminate directly by phase opposition the hum producing fluctuations." Now, plaintiffs contend exactly to the contrary in this case. They say that there is in the defendants' loud speaker. And the Court goes on: "They assert, however, that defendants through equivalents employs the means of the claims to produce the result of the patent. But defendants' device is designed"—and this is important—"But the defendants' device is designed to eliminate from the amplifier circuit and from the field coil circuit any and all hum producing fluctuations there present and to leave no residual fluctuations to be neutralized by cooperation between the amplifier and loud speaker." In other words, there as here we contend that we use a filter to eliminate all hum and there is no neutralization in these two coils, 9 and 10, or at least our coils which correspond to coils 9 and 10 of the patent, just exactly as Judge Morris stated.

And then the Court goes on: "The means used by defendant to make its field coil current steady and pulsationless and to shield its armature coil from the effect of residual fluctuations or magnet leakage include, in addition to the impedance and skin effects of the coil itself, a full wave rectifier instead of a half way- rectifier of the patent." We use, if the Court please, the full wave rectifier instead of a half wave rectifier of the patent. Then it goes on: "A filter to smooth out the ripples in the rectified current, a pot magnet"——

The Court: What is that?

Mr. Darby: We use a filter to smooth out the ripples of the rectified current. "A pot magnet"—— We use a pot magnet. "The placing of the armature coil"——

The Court: What is a pot magnet?

Mr. Darby: A pot magnet consists—it looks just like a pot. That is where it gets its name. In cross-section it looks like this, your Honor.

(Illustrating on blackboard).

It is shaped like a pot and the magnet is located in here. Your Honor will recall in defendants' loud speaker that you inspected with Mr. Dunmore, I think it was—you asked him to take off the back part? That is the pot. We use a pot magnet and the Court points out, as the testimony in the case which will come in in a few minutes points out, that the use of the pot magnet is—"the placing of the armature coil in as non-inductive relation as possible to the field and copper rings to shield the armature coil from the effects of any surviving current pulsations." Now, we do not use that. Then the Court goes on: "Defendant's mode of operation is the direct antithesis of that of the device of the patent which intentionally employs neutralization by direct phase opposition."

That applies to us absolutely as well. Now, here is what they say about the rings: "Plaintiffs, however, insist that ripples of hum frequency in the current of the field winding cause magnetic fluctuations that produce eddy currents in the copper rings, that the same results flow from alternating current variations in the armature coil and that these currents are in opposed phase relation to the producing current and consequently bring about opposed phase relationship." In other words, while we are identical with the 104 loud speaker of the Radio Corporation in every respect save one. That one respect, the use of these copper rings was the very thing that the plaintiff in the prior case relied upon to establish that they did use phase relation. Therefore, when we eliminate the copper rings entirely, not only have we eliminated the one thing on which they hung their hat in the prior case, but we have taken their structure completely out of the patent.

Then the Court goes on: "But even if this theory be sound, and its soundness is questioned, the phase opposition of the patent is direct, not echoed." In other words, the Court said the phase opposition is right in these coils 9 and 10.

The Court: To boil down what you have said up to date, would you have me to believe, in spite of having stood down there for about an hour, or the better part of an hour, listening to the analysis of the inventor him-

self that he did have phase opposition and his device was exactly like the one set up there in so far as the loud speaker was concerned, that in spite of that you say what he tells me about his own patent is not true?

Mr. Darby: No, sir, I do not say that.

The Court: Let me see, now—I do not want to make a wrong statement, but doesn't it come down to that?

Mr. Darby: It comes down to this—I am sorry.

The Court: Let me make myself clearer. I went down to the table and he told me that he claimed nothing,—he claimed no novelty existed anywhere,—except in the loud speaker and unless I very completely misunderstood him he said that his whole point of the alleged novelty was in his phase opposition in the loud speaker.

Mr. Darby: That is correct.

The Court: And then Mr. Lowell, the other inventor, came here and drew that thing on the blackboard to show me the analogy between pistons and the electric current. Now, if they are right in saying that phase opposition means the loud speaker unit, which is what they claim is the novelty, do you say that it is not in there at all?

Mr. Darby: No, sir. You misunderstand me, your Honor. I agree with them one hundred per cent. That is what their invention, that is what their patent discloses, and that is the only invention there disclosed, and the only invention they claim is disclosed.

The Court: I have not quite finished. But, as I understand that, they take that device, which was yours, to illustrate it——

Mr. Darby: Yes, sir.

The Court: —to illustrate that the phase opposition is in the loud speaker. Now, you come along and tell me that the phase opposition is not in that device at all.

Mr. Darby: It is not in our device, if the Court please.

The Court: That is the one that he demonstrated from.

Mr. Darby: Yes; but he has taken our apparatus apart, disassembled it, has added a lot of equipment,

and I do not know what else has happened to that speaker. I will tell you what we did to prove to your Honor that our commercial loud speaker does not operate according to phase opposition, we did two things, the first thing, we show that our loud speaker is in identity with that held by Judge Morris not to infringe, and then we did one thing else, we located a person here in the city of Baltimore to whom, according to the records of the defendant company, one of these radio receivers had been sold some time ago and has been used in this lady's home continuously since then. We got in a taxicab, went out there, got that loud speaker and have it here in court, and I am going to demonstrate on that loud speaker, which is over there ready to be connected, that you do not get any hum in it whatever, no matter how those coils are connected.

Now, I do not know what the explanation is for this receiver that is here in court, as your Honor can see, they hase disconnected it, supplied a lot of additional wires and equipment. It may well be, and I have expert testimony to establish, that these additional wires and equipment have thrown that set completely out of balance, because our commercial receiver hasn't got it. It hasn't got it for each of the reasons that Judge Morris found avoided this patent irrespective of its validity, because your Honor will appreciate this, if defendants' receivers operated and eliminated hum because of phase opposition in these two coils 9 and 10, if both coils are connected so that the current flows through them both in the same direction, you ought to get a very substantial hum. If the coils are connected so that they flow in opposite directions you ought to get no hum. Now, I am going to show you on this commercial receiver that has not been touched, that it does not make any difference, and this is exactly the same test that was made before Judge Morris with the 104 loud speaker of the Radio Corporation, it does not make any difference whatever how the terminals of those coils are connected, conclusively establishing that we eliminate our hum, just like the RCA 104 eliminates the hum, eliminating it at its source, so that it does not occur in the circuit. I will satisfy your Honor on the matter of infringement one hundred per cent. If I do not, I deserve to lose the case.

The Court: Then you had better finish with that right now.

Mr. Darby: All right, sir. Mr. Dumont, will you take the stand?

Thereupon ALLEN B. DUMONT, a witness of lawful age, produced on behalf of the defendant, having been duly sworn, testified as follows:

DIRECT EXAMINATION.

By Mr. Darby:

The Witness: My full name is Allen B. Dumont. I was graduated in 1923 from the Rensselaer Polytechnic Institute with the degree of Electrical Engineer. Prior to that time, during summer vacations, I worked with the Telefunken Company, the Marconi Company, the Independent Wireless Company. At graduation from school I was associated with the Westinghouse Lamp Company as engineer in their research department and developed a number of tubes and circuits during that time. I was in the research department of that company for approximately two and a half years, when I was transferred to the production department and had charge of the production of radio tubes up until 1928. At that time we were making approximately 100,000 receiving tubes a day. In 1928 I left the Westinghouse Company and went with the De Forest Radio Company as chief Engineer and I was with that concern for approximately three and a half years in that capacity, during which time I had charge of the design of receiving sets, transmitting sets, radio receiving and radio transmitting tubes and television apparatus. Since that time up until the present I have been engaged in consulting practice and also development work, in work with cathode ray tubes and oscillographs. I am a Fellow of the Institute of Radio Engineers.

Mr. Darby: I offer in evidence what was Defendants' Exhibit No. 74 in the prior litigation. It consists of a schematic diagram of the loud speaker model 104, charged to be an infringement in that case.

The Court: Now, let me see. You do not make your argument reasonably clear to me. Isn't it possible without a lot of diagrams for this witness to go to the machine, or go to the board and tell me wherein they elim-

inate the hum, and if they do not eliminate it in the loud speaker, then your contention is upheld.

Mr. Darby: Yes, I will withdraw the offer.

The Court: After all, what is the use of the witness if he can not make it clear to me?

Mr. Darby: All I intended to do was to put in evidence the diagram of the RCA 104 loud speaker.

The Court: I do not want that. It doesn't do me a bit of good. You see the trouble, if I may respectfully say so, that most patent attorneys seem to fall into, is that they concern themselves most about making the record. I am not a bit interested in the record. I am interested in being told what is the difference in the machines, and if the witness can not tell me, why, then, there can not be any record. The first object ought to be to tell the trial judge what the difference between the machines is. Now, if Mr. Dumont can go to the board or go to this machine and explain to me that what you say is true, why, that ends the case on the question of infringement but if he has got to fall back on some diagrams or records in another case, then we are exactly where we were yesterday afternoon when I had difficulty in reading Dr. Lee's diagrams on the board.

Mr. Darby: I had just two objects in mind, your Honor, and I want to discharge them both in the manner that would be acceptable to your Honor. I want to establish by evidence that our receiver does not differ from the 104 receiver, and I also want to establish that we do not use this point, so I will go directly to the last point first.

Q. Will you please briefly state the circumstances under which you got the model 109, Stewart Warner receiver, which is here in the courtroom?

Mr. Edwards: I object to that as immaterial. This is not the machine against which our case is made out. There is the Stewart Warner receiver on the table against which we have directed our charge of infringement.

The Court: How did that one come into your possession?

Mr. Edwards: We bought it. It was admitted that we bought it from the defendant. It was manufactured by the defendant. Mr. Lowell testified this morning, or Mr. Dunmore, rather, showed by the way the connections were put in at the factory, and the machine is otherwise in the same condition that we got it—I mean otherwise except for the cutting of the wire and putting in the switch so that we could switch it from reverse coils to cumulative coils.

The Court: Why not let him go down and testify whether that is one of the defendants' machines? If it is not, point out where it is not.

Mr. Darby: Your Honor, it is one of the defendants' machines but they have taken it out of its natural situation. They have mutiliated it, added things to it, separated the parts and added wires.

The Court: They say they have not.

Mr. Darby: It shows on its face.

The Court: That ought to come from the witness, not from the attorney.

Mr. Darby: Absolutely. That is what I am asking and Mr. Edwards is objecting to it.

Mr. Edwards: I am not objecting to that. I am suggesting that he point out in regard to this machine here wherein there is anything about it to show the coils were not in opposition as we say.

Mr. Darby: I will come to that. I have got the 109 receiver in its marketable form and I want to establish that on the record and the circumstances under which it was acquired and then I will ask the witness to point out where their apparatus is not proper.

The Court: Very well, go ahead.

Mr. Edwards: I object to this other machine. As I understood it, from Mr. Darby, that is something that was put out some two or three years ago and it is not the machine against which the charge of infringement is directed here.

The Court: I think it would be helpful if you would use it by way of contrast.

Mr. Edwards: May I have an exception?

The Witness: We had brought a model of 106 receiver into court to demonstrate the fact that it did not make any difference which way the coils were connected. However, on coming into court we found that they were using 109 model instead of 106 and as that model was several years old we could not locate any in town, so we had to look up and see who had purchased the other receivers prior to that time, and we located a Mrs. Ruth Sobol of 3413 Wayne Avenue, Baltimore, who happened to have one of these machines. We went out and got the machine, borrowed it from her, and the only change that we made on this machine is to put two clips on the wires so that they could be reversed. We did not want to put switches in it, we did not want to take any wires out, like they have done on this set on the table, due to the fact when you make connections like that it would pick up hum and interference and you do not get a true test. You can observe from the back there, when you see the set, that it is in the original state that it was received from the company and it is not all torn to pieces. I will step over to this set and operate it and demonstrate whether or not hum elimination can be obtained. This wire (indicating) is the same as the wire that comes out of the back of the other set. This has four wires contained in it; two which go to the voice coil and two which go to the field coil. I did not know at the time we got this installed whether they were going to reverse both the voice coil and the field coil, so I put connections on each one of them in order to change both of them:

I put connections on to each one of them, in order to be able to change both of them. But, as long as they have only questioned the shifting of the field coils, it will be only necessary for us to shift the two connections which go to the voice coil, to prove whether there is any hum in the apparatus or not. Now, I can turn this on. I will first tune in a station, to show that the set is operating properly. It just takes a second for it to heat up.

(Set in operation.)

The Witness: Now, I will tune the set so that we cannot hear the station, and you can listen for the hum. There is absolutely no hum whatsoever in the receiver. Now, if Mr. Darby will just turn that off; I do not want to get

shocked when I shift this. I will shift these two connections to the voice coil and the receiver, and incidentally they are long enough to be shifted, contrary to the testimony given. They have not been changed. They are the original connections, and both the same way. I have shifted the two the opposite way, and move these so they would hit together. If you will just turn that on again, Mr. Darby.

(Set in operation.)

The Witness: Listen for the hum. There is absolutely no hum there. It does not make any difference which way you shift them, because the alternating current has already been filtered out by the filters, and there is no A. C. components going to the loud speaker. Now, I can tune this station in again, if you care.

(Set in operation.)

Just to show it is still operating. Now, this set has not been changed in any way from the way it was received. It is all together. Would you please leave that alone.

The Court: Now, can you come here and tell me where you eliminated it?

The Witness: Yes, sir. The hum is eliminated by means of a condenser which is inside of this case, and by means of choke coils underneath the receiver. They are actually in the receiving apparatus. That is the method of eliminating the hum. So there is no hum whatsoever that comes out of the set. It is common practice, and it is done in a lot of various apparatus.

I will now explain what different results were obtained with the model 109 receiver that the plaintiffs have set up on the bread board effect.

Different results were obtained with the receiver, probably due to the fact that it had been disassembled and mounted differently than it was mounted in the original case, due to the fact that various leads were taken out of the receiver and brought over to switches. Ordinarily these wires are inside of the shielded metal cabinet, so that no disturbances are picked up. It is obvious that when you separate out the wires, as has been done in that apparatus, that you are not sure of your results;

and whatever tests were made on the receiver to really determine its operation, it is always made exactly as the receiver is to be shipped to the ultimate consumer. It is not disassembled and a final check made on the parts spread out on a bench. It is a matter of common engineering and radio knowledge that wires connected to apparatus laid out in the open induce currents from one to the other. It is that fact which causes wires to be shielded in the modern radio apparatus.

Mr. Darby: That is all I have to say on that point, your Honor, and if I may come to the second point, unless your Honor has something.

The Court: I want to ask a question or two to get this more clear in my mind. Do I understand you, Mr. Dumont, putting it in laymen's language, to contend that in the defendants' device which you have just demonstrated, no hum passes out of the set, the receiver set?

The Witness: That is correct.

The Court: That you do away with that hum by what you call a filter method?

The Witness: That is right.

The Court: Do I understand, as has not been explained, but you inferentially maintain it is not necessary to explain that in detail, due, of course, to the contention of plaintiff; you say that you eliminate all hum before it gets into the loud speaker?

The Witness: That is correct.

The Court: And you are demonstrating that by showing that no matter how the wires are placed in the loud speaker or, as you call that, the coil——

The Witness: It is the loud speaker. The coils of the loud speaker.

The Court: ——the wires in the loud speaker are placed, whether in phase opposition or not, that you do not get any hum.

The Witness: That is true.

The Court: And from that you would have me draw the conclusion that while you do eliminate the hum, that

is, while your device accomplishes the same purpose as the plaintiffs' device, that you do it in an entirely different way and in an entirely different place.

The Witness: That is correct.

The Court: Namely, in the receiving set, and not in any way in the loud speaker.

The Witness: That is exactly what is done.

The Court: Is that a fair statement of your contention?

The Witness: It is.

The Court: Very well. Now, if that is true, then I suppose you would say that if the plaintiff has one of its own sets complete and in operation, and if they demonstrate that, and if they show that the same alteration of the wires in the loud speaker that you have made in your demonstration do not produce the result, namely, that by alternating wires in the loud speaker, in the hypothetical demonstration that I am now speaking of with plaintiff's apparatus if that alternating of the wires does not produce the same result in each case, that is, if the hum is eliminated in one case and not in the other, then, if I understand you correctly, you say that it necessarily follows from your demonstration of your client's machine that the two things must be different.

The Witness: That is correct.

The Court: Because while the result is the same that is accomplished under the suggested demonstration, that is, if the demonstration is made that I have just suggested, that machine of the plaintiffs does not show that the hum is eliminated, regardless of how the wires are changed on the loud speaker, that it necessarily follows from your demonstration that the elimination can not be produced in the same way.

The Witness: That is correct.

The Court: Is that a fair statement of what your testimony leads to?

The Witness: It is, your Honor.

The Court: Well, now, it seems to me right at this juncture I would like—I do not want to interrupt the sequence of your thought,—but I would like to have the plaintiff's answer to that. Why isn't that a self-evident thing? I am not attempting to say what such a demonstration would produce, but why isn't that the correct way to answer defendant's contention, and why isn't it the only conclusive answer, Mr. Edwards, that I could rely on? If I have not made my suggestion clear, I would like to restate it, because I am not attempting now to decide the matter at all; but I think I can get it very clearly, what the defendant's contention is. Whether it is sound or not I am not now deciding, but if I have correctly stated it, it seems to me that the best way, in fact, the only way that I see now that I can determine with any finality whether that contention is sound, is for the plaintiff to say to me in effect, listen to our machine, listen to our apparatus, let us alternate or change the wires in the loud speaker, as has been done by the defendant in this, and see what the result is. Now, if the result is not the same, then, unless there is some element involved which has not been talked about, or at least made clear to me in the last two days, doesn't it necessarily follow that the same result is being produced in an entirely different way, because in an entirely different unit, and, as I understand it, the inventor, one of the inventors, if not both of them, has said this morning that they claim no novelty except in the loud speaker; and then if such a result as I have outlined would be produced by that test, why wouldn't the best evidence be had of what is the true answer to the question?

Mr. Edwards: Well, I think your Honor's mind runs along very close lines to our way of looking at it. We came in, and we said that our invention consists in winding the coils, of the two coils of the loud speaker in opposite directions. We said, If you take a loud speaker and put it on a set operated by alternating current, you will have hum delivered into both coils and the receiver, and if you wind the coils in the same direction that hum will be loud; if, on the other hand, you reverse them, the two hums will neutralize each other, and you will not interfere with the signal. That was a very narrow compass. Well, yesterday and today we brought in a set, a Stewart-Warner set No. 109, admitted to be made by the Stewart-Warner Company; and Mr. Dunmore showed that the

set, as we received it, and as indicated by the length of wire to the coils, was made up with the coils in opposition to each other, and that when the coils were reversed you would get a substantial hum, but when put back into the condition in which the set was received, with the coils in opposition, you did not get the hum. We also this morning demonstrated on one of the plaintiffs' machines, that is to say, a machine made by one of the licensees under the patent in suit, and showed on that machine that by taking the coils as they stand in the machine you hear no hum, but by reversing them you do hear a hum. Now, I submit that is the test thus far. Now, as I follow the defendant's testimony, the defendant says in reality we have in our machine what we refer to as a Hull filter interposed between our receiver and our loud speaker, and that Hull filter takes the hum out of the set. Now, if I follow your Honor, I will say that I agree with you, that if the Hull filter takes all of the hum out of the set, then it may or may not make any difference whether the coils are reversed or not. It may be that there is no hum to take out when you get to the loud speaker.

The Court: Well, isn't that proved by demonstration?

Mr. Edwards: I think not, sir.

The Court: Well, I do not see how it can be proved any more clearly than somewhere before you get to the loud speaker it has been eliminated. I do not think I should be burdened with determining where it is eliminated, if you disconnect, so to speak,—if you make the same connection or disconnection at the loud speaker,—since the plaintiff has said that that is the only place in which they claim novelty.

Mr. Edwards: Well, now, sir, I think we have several answers to that. We demonstrated on this Stewart-Warner set here that there is hum both before and after it gets to the Hull filter; as it comes out of the Hull filter there is hum, and that is taken out by the reversing of the coils in this set, against which we made out our case. Now, the defendant comes in and says here is another Stewart-Warner set—Mr. Dumont, not the man who made it, not the Stewart-Warner Company, but Mr. Dumont comes in and says, "I traced a machine, and I brought this machine, and I found that in this machine I do not hear any difference whether the coils are one

way or the other." Now, he has criticized this one as not being good, because he says it is separated. We propose to criticize that and ask your Honor to make another test on that machine. They have put the cloth in the loud speaker, bundled it up, where you are not likely to hear this hum; and bear in mind, your Honor, we are listening to these speakers in a more or less noisy room. The real test for this is the person who is sitting in a quiet room, in a resonant room, and does not want to hear a loud, blatant signal, or a low one.

The Court: It does seem to me that prima facie I will have to give more weight to a machine that has been in commercial use—I am not saying this is the one, but I will certainly have to lay this down as the governing principle, that if I am satisfied that a machine is one that has been in commercial use and is here operated in the same condition that it was in commercial use, I will have to give more weight to its operation than to the operation of a machine which the plaintiff has gotten—I am talking now about the defendant's machine—which the plaintiff has gotten and has dismantled and set up in a way which is not a commercial way.

Mr. Edwards: We have not dismantled that machine in any respect, except to take it out of the case, where one can not make a good test. And, after all, I submit to your Honor there is a machine which it is admitted that the defendant has been selling. If defendant sells that machine, and it is an infringing machine, and if, as defendant says, it makes no difference which way these coils are connected, then surely it will do them no harm to stop connecting their coils in phase opposition. I have yet to hear, sir, a single statement or evidence or proof that the defendant does not connect those coils in phase opposition.

The Court: Well, now, next in order I would like to have Mr. Dumont explain what, in his opinion, is the difference that has been caused by the way this machine on the table has been handled or set up.

The Witness: You want me to go down to the machine?

The Court: Well, if you want to go there.

Q. (By Mr. Darby) You can stay there.

A. I do not think it is necessary for that. Your Honor will notice that out of the side of the chassis, that is the metal box which the set is mounted on, they have taken a number of leads out to the various switches on the bread board. Now, the receiver is designed so that all the wiring in connection with the radio receiving set is supposed to be inside this shielded metal box, to prevent any extraneous current, either alternating current in nature, or from elevator motors, or fan motors, or anything from being picked up. Now, they have taken those sensitive leads out and put them right on the board there where they are exposed, and it is impossible to tell just how the set would operate. It might operate entirely different in another location; another location might have a lot more electrical interference than this, and there would be no—you can not be sure of the operation of the receiver. And another thing they have done, instead of taking the voice coils directly to the loud speaker and putting, as we have done, clips on them, showing that there is not any difference, they bring it out in front of the loud speaker, put it near the other wires that are coming out from the receiver there; and it is impossible to tell just what condition you have in the set.

The Court: Have you put anything else in here at all?

The Witness: We have not touched that set in any manner. And I might say at this time that we have a 106 receiver at the rear of the room, which we originally tested, that only has two clips on it. We did not bother shifting the excitation coils of that. It has clips on just the two top coils. And we can take any receiver that is available in town and do the same thing with it, and you get the same result. We do not have to pick sets and we do not have to work over them. In other words, the receiver that I tested is in its normal condition and under normal circumstances. It is exactly the way it is used.

As to whether the receiver that the plaintiffs have used is in its normal condition and under normal circumstances, I will say that they do not certainly sell any receivers built up that way. The two receivers are not identical. The two pieces of apparatus are not identical. It is true that they are both 109 receivers.

The Court: Well, now, this is a little irregular, but I want to get this point cleared up. I am satisfied that the matter that would be of greatest probative value to me at this point right now is the demonstration by the plaintiffs' own machine to see whether, applying the same tests, the same or different results would be gotten. Mr. Edwards, I want to give you full opportunity to answer that question, but it seems to me that that is a conclusive answer to the question of whether they are similar in their operation, provided always the samples are accurate and are commercially proper samples. It seems to me to be a very simple proposition. If these are in proper working condition, it is fairer to listen to one of them and fairer to listen to the plaintiffs' machine in a similar case, than it is to listen to the defendants' machine set up by the plaintiff under conditions that it would never be sold under, conditions under which it would never be sold. Now, I do not see what the answer is to that.

Mr. Darby: Your Honor will recall that they made that demonstration this morning. They set up the Grigby Grunow machine, the Majestic machine, which they established was manufactured by one of their licensees, and showed that when the switch was on one connection you got no hum, and when it is on the other connection you get a substantial hum. They did that this morning. It has already been done.

The Court: Well, I want that example.

Mr. Edwards: May I ask, to be clear, if we will first demonstrate it on the Grigsby-Grunow machine?

The Court: That is the plaintiffs'?

Mr. Edwards: That is the plaintiffs' machine.

The Court: That is a machine commercially in use?

Mr. Edwards: Yes, sir. May I also suggest this, sir. This model which we produced and demonstrated this morning has been criticized because it is said the parts are separated. May we restore them by putting back in the case and testing that?

The Court: Very well.

Mr. Edwards: That is the one that we bought, mind you, in the ordinary course of commerce, as this was sold, as this machine was sold.

The Court: Well, how long would it take to put it back?

Mr. Edwards: About fifteen minutes.

The Court: Suppose you have that done while I am looking at the other.

Mr. Edwards: Very well.

The Court: Can you put that back so that it will be like the other one?

Mr. Dunmore: Yes, sir. It will take about twenty minutes.

(Set operated.)

Mr. Frederick Brady: There it is operating normally. The hum is very slight.

The Court: Can't you put the voice coil in so I will see the effect?

(Set in operation.)

The Court: I can hardly hear it at all.

Mr. Frederick Brady: The hum is very fine.

The Court: Now, put it over here again.

Mr. Frederick Brady: Perhaps you can hear it better in front.

The Court: I do not hear any difference.

Mr. Frederick Brady: It is very slight, but if you tune your ear to the 60-cycle pitch. That is normal operation. There it is reversed. I will leave it on for a few minutes. There are two noises, that crackling. There, can't you hear that hum?

The Court: Is that normal?

Mr. Frederick Brady: No, that is reversed.

The Court: Yes, I hear that.

Mr. Frederick Brady: There it is normal.

The Court: There is a little difference.

Mr. Frederick Brady: There is a difference.

Mr. Edwards: While we are restoring that set, you might, perhaps, go ahead with Mr. Dumont.

Mr. Darby: On the matter of restoring that set, your Honor, I do not want to be taken as acquiescing in an attempted restoration, because I do not know what has happened to that set. If it contains any hum at all, it is not the way it left our factory.

The Court: Well, I suppose the witness can tell whether it is being restored properly, can't you?

The Witness: I can not tell really whether it has been restored correctly without actually checking the various condensers and resistances in the set, and that is a question of taking a day or so, with the necessary apparatus to do it, to be reasonably sure that everything in there is as it left the factory.

Mr. Darby: Well, I will go onto the next point. My next point is to establish that our radio speaker is the same as the radio speaker which Judge Morris held to be not an infringement. For that purpose I must put in evidence the drawing of the 104 loud speaker, so I offer in evidence the drawing of the R.C.A. 104 loud speaker, which is typewritten exhibit 74 in the prior case.

The Court: I thought you admitted it was not the same, because it did not have the copper ring.

Mr. Darby: It was the same, with that exception, if your Honor please.

The Court: That is all we need to say about that.

Mr. Darby: That is all we need to say, but must I not have something in the record?

The Court: All right.

Q. (By Mr. Darby) Is my statement correct, Mr. Dumont, that the only difference between them, in so far as this case is concerned that in the present de-

fendants' loud speaker they omit the copper ring? A. Yes.

Mr. Darby: I offer that in evidence.

(Drawing referred to marked "Defendants' Exhibit A.")

Mr. Darby: I understood from your Honor's viewpoint that you consider infringement to be of importance, but I nevertheless put in issue the question of validity, and for that purpose I will offer in evidence Langmuir patent No. 1,282,439.

(Patent referred to marked "Defendants' Exhibit B.")

Mr. Darby: Hull patent No. 1,251,377, which was Exhibit A for Identification, and which will now be offered as C.

(Patent referred to marked "Defendants' Exhibit C.")

Mr. Darby: The White Patent 1,195,632.

(Patent referred to marked "Defendants' Exhibit D.")

Mr. Darby: Robinson Patent No. 1,587,084.

(Patent referred to marked "Defendants' Exhibit E.")

Mr. Darby: And the Pridham & Jensen Patent No. 1,105,924.

(Patent referred to marked "Defendants' Exhibit F.")

Mr. Darby: An- in connection with that Pridham & Jensen patent, if I may pass it up to the Court, I call your Honor's attention to the fact that this patent, which was applied for in 1913, and issued in 1914, is for a telephone reproducing device, such as the loud speaker is, and it advances at its invention opposite phasing of the coils of the loud speaker, to eliminate extraneous noises due to hum, and whatnot.

The Court: Where is that?

Mr. Darby: Right on the first page, beginning at line 41, "In instruments of the class wherein an annular movable coil has been employed it has heretofore been necessary to use direct current from either a primary or secondary battery when electro-magnets produce the magnetic field. When direct current from a dynamo has been used, a strong reaction takes place, owing to fluctuations of the current due to the commutator action. This reaction is caused by variations of the field strength which induces currents in the telephonic coil. These currents reacting upon the normal field strength produce the vibration which greatly interferes with the action of the instrument. Concerning the development of these induced currents in the telephonic coil, it can be shown that a decreasing field strength will produce an induced current in the same direction as the energizing current while an increasing field strength produces an induced current in the opposite direction to the energizing current. In the instrument under consideration we have used direct current with a high degree of success even when the fluctuations of current were strong."

The Court: Isn't it a sufficient answer to this to say that they are not dealing with alternating current?

Mr. Darby: No, sir, we are not dealing with alternating current either, after passing the rectifier, even in the patent, in ours it is direct current.

The Court: It is not the same sort of direct current. I understand you have admitted that, when you gave the demonstration on the board.

Mr. Darby: Well, I do not know whether it was Judge Woolley or Judge Morris who points out in his opinion—maybe it was Judge Woolley—in connection with the Patent No. 2, but as he points out, after you leave the rectifier it is direct current, and the source is wholly immaterial. Now, in the patent in suit it is direct current, our structure has direct current, and all of them have exactly the same problem thereafter, to smooth out the ripples that occur. Now, in the patent in suit those ripples that are in there are because of a 60-cycle hum. But this patent points out that our invention simply comprehends the use of a divided conductor, in each section of which is included the magnetic field, energized from the

source of fluctuating direct current. And that is what they have, and that is what we have, the sections being so connected together that the induced current can have no effect in actuating the diaphragm of the instrument. In other words, they are in opposed phase to each other. It is directed to exactly the same thing as the patent in suit.

The Court: That is the one you rely on primarily, is it?

Mr. Darby: An anticipation, yes, sir. And your Honor will recall that is the patent Judge Morris referred to, and because he says, because he disposed of the case on non-infringement it is not necessary to go into it.

I also offer in evidence the file wrapper of the patent in suit. It is in support of the second attack on the validity of the patent, because of all the claims. And this idea of opposed phase relationship of the coils was injected into the case, new matter, more than four years after the application was originally filed. That is all revealed from the file wrapper, and reviewed in the Judge's opinion.

(File wrapper referred to marked "Defendants' Exhibit G.")

You can take the witness for cross-examination.

CROSS-EXAMINATION.

By Mr. Edwards:

Q. Mr. Dumont, is it your testimony that if the field coil and the pot magnet coil of the loud speaker are wound in opposite directions and both coils are receiving a pulsating current, that the action, the cooperative action between the two coils would or would not tend to reduce the hum in the two circuits.

The Court: He says there is not any at all.

Mr. Edwards: I do not understand him to say that, no.

The Court: Isn't that what you said?

The Witness: I said in our receiver——

The Court: He is talking about his machine.

Mr. Edwards: No, I do not want to ask about his machine particularly; I am talking about any machine.

The Court: Do not let us get confused, Mr. Edwards. I do not want to talk about any machine. I have heard this machine, and I have to stand or fall on what I hear and see.

Mr. Edwards: Yes.

The Court: Now, unless you can controvert that testimony, I shall have to hold that there has been no infringement. And I do not want to hear about any machine except the machines that are now in this court room, nor am I interested now at this late stage in hearing about what he thinks about the effect. I have heard the effect of the two machines. I want to hear the effect on the third after it is put in the position relative to the other two. So we are just going over the whole thing again, and tending to confuse what is in my mind. All I want to hear from him now in cross-examination is something that bears upon his contention, which is, in a word, as I understand it—correct me if I misstate your testimony in summarizing it—that in the defendants' machine you claim there is no perceptible hum, no hum that is audible to the human ear after the voice or the signal gets into the loud speaker, and that, therefore, it makes no difference how you have the wires related to each other, or the currents related to each other in the wires in the loud speaker; whereas, with respect to the plaintiffs' device, you claim that the opposition is true, namely, that the elimination of the hum does not take place in the filter, or in any other part of the receiving unit, but takes place by reason of this phase opposition as tested by transposition of the wire.

The Witness: That is a correct statement.

The Court: Now, the case, Mr. Edwards, has got to stand or fall on that proposition, what he says, if substantiated by the weight of the testimony, or rather, if the plaintiff does not sustain the burden of proving infringement, which rests upon the plaintiff, then the plain-

tiff can not win. Now, therefore, while it may be interesting, it is just confusing at this point to go into a question of the science and the development of this science, and what this witness may have found in regard to some other machine. And I would like you to confine his testimony to these particular points.

Mr. Edwards: Well, now, I think my question, sir, leads very directly to that machine. May I have an answer to my question first? I am asking him as a general principle if he agrees or disagrees with the general proposition that if the two coils of the loud speaker are receiving pulsating current, and if those coils are wound in opposite directions, does that tend to neutralize the hum or not?

The Witness: I think the answer to that is exactly the statement that was just made, namely, that you can eliminate hum by having the coils connected so that you have phase opposition. That is one method of eliminating hum. The other method of eliminating hum is to take it all out in the receiver, don't allow any hum to get to the loud speaker. Those are the two methods.

As to whether or not I agree that in the patent in suit, or the plaintiffs' machine, where the current goes directly from the rectifier to the field coil of the speaker, and from the output of the receiver to the armature coil, when coils in that condition are wound in opposition, that that is one way of eliminating the hum, I will say that that is one way of eliminating the hum, but from the patent, as shown, with the extreme high amount of hum that must be there, it would be rather difficult to eliminate it entirely. It is true that in this machine which I have brought in, I claim that at the time the current leaves the rectifier, there will be a hum at the output of the rectifier alone. I make no question of that. It is true that I claim, that the filter element which comprises the field coil 81779 and the two condensers, eight microfarad condensers marked 81347, constitute a so-called Hull filter, which is effective to take that hum out. That filter removes the hum. It is common practice to do it. It is done in innumerable pieces of apparatus. It is correct that in this machine, which I have brought in this so-called Hull filter, takes out the hum, so that there is

no hum left to be neutralized in the radio speaker. That is my position.

The Court: Now, is that machine ready?

Mr. Brady: Yes, I would like to hear that.

(Set in operation.)

Mr. Brady: Yes. Now, this is Stewart-Warner model 109 apparatus, which has been removed from the test board and restored to its original cabinet. It is absolutely the same form as is sold on the market.

The Court: Now, let me ask Mr. Dumont, is that now set up as the other one is set up?

The Witness: From what I can see, it apparently is similar. Of course, I can not tell except without examining it.

Mr. Darby: Why don't you get it away from all this extraneous apparatus and set it up over there, where the other set was?

Mr. Brady: Yes, that is a very good suggestion.

The Court: Yes, that is a good idea. Couple it up over there.

(Set removed to another portion of the Court Room.)

The Witness: Do you want to put this same antennae on that I had, so we will have a comparative test?

The Court: I want to have it as near the other conditions as it can be made. Is it the same size machine?

The Witness: It is the same machine.

The Court: The same model?

The Witness: Yes, the same model.

(Set in operation.)

Mr. Brady: So that we may have our record there, will you put on the record that re-installed 109 Stewart-Warner machine has been removed to the identical test table as that occupied by defendants' model 109. And Mr. Lowell will now perform tests on the restored 109. Please tune in a station, Mr. Lowell.

Mr. Lowell: I have already done so.

Mr. Lowell: You are satisfied with the station, are you?

The Court: Yes.

Mr. Lowell: Would you like to have me reverse the voice coil?

Mr. Brady: If you please.

The Witness: You better turn that off. There is a live circuit there.

The Court: First, I want to hear the conditions. I want to make the test as parallel to Mr. Dumont's as I can.

The Witness: I just tuned in a station to see that the set was operating.

The Witness: I tuned in a station to see if it was operating, and then I detune it so that you can hear any hum if it was present, so that the music would not bother you.

The Court: Is it detuned now?

The Witness: Yes.

The Court: Where should I put my head?

The Witness: Right there.

The Court: What connection is wrong in there?

Mr. Lowell: The connections are now as they were when the receiver was received by me.

The Witness: There is a large amount of hum in there now.

The Court: Well, what I mean, are they in phase opposition or not?

Mr. Lowell: They are in phase opposition, yes, sir.

Mr. Edwards: At the present time?

The Court: At the present time?

Mr. Lowell: Yes.

The Court: Now, change it.

The Witness: That is there, Judge. I mean that is an extremely high hum. We did not have anything like that. There should not be any.

Mr. Lowell: The voice coil is now connected in the reverse direction than what it was a minute ago.

Mr. Edwards: The coils are now which way, cumulative or in opposition?

Mr. Lowell: The two coils are cumulative now.

The Court: Now, will you put it back the other way?

Mr. Lowell: Now, it is back in the original position.

The Court: Well, it is much milder.

The Witness: It is much milder, but the set would never be shipped from the factory in that condition, a set that has as much hum as that.

Mr. Darby: You mean when connected in its normal condition?

The Witness: Connected either way. It does not make any difference.

Mr. Darby: Is there something wrong with that particular set?

The Court: Well, now, can you quickly put the other one back here?

The Witness: Yes, sir.

The Court: Now, that I have my ear tuned to it, I want to hear the other one.

(Other set placed on table.)

(Set in operation.)

The Witness: I will first tune in the station. Now, you can listen to the hum that is in the receiver.

The Court: Now, what is the condition of this one now?

Mr. Darby: This is in——

The Witness: Well, this is, I think it is in phase opposition.

Mr. Darby: What they call phase opposition. No, it is in——

The Witness: Yes, it is. I think so. I will know after I make the next test.

The Court: All right, make the next one.

The Witness: Have you an idea of how much hum there is there now?

The Court: Yes.

The Witness: I will turn this off and let him reverse it, if you do not mind. I want to be sure that the connections do not hit the coil there.

The Court: Now, can you change it once more?

The Witness: Yes, just a second, I will turn this off. It is off now. I will put it back to the way it was originally when we started this test.

(Set changed.)

The Witness: It is on now.

The Court: All right.

Mr. Edwards: Is there any objection to removing the cloth from its face so that we may hear?

The Witness: I do not see what that has to do with it.

The Court: Is this different from the other one?

The Witness: This is a standard model case this way. I see no reason for taking it out.

Mr. Edwards: The question is not what is different between this and this, but the question is whether the coils are in one condition in this set, if there is a difference, when the coils are in the opposite position in the same set, became, if putting them in opposition does reduce it, then the extent to which they reduce it is the plaintiffs' invention. Now, in some sets it is a commercial matter, if they sell a very cheap set. Some can stand more.

The Court: But I can not see any point in taking this off, unless you take it off of both of them, unless there is a different grade of felt.

Mr. Edwards: There is no objection to taking it off. But the one which we tested had this very pronounced, when the coils are one way or go the other way. And the point is made that in this set which they have brought in that there is no particular difference between the output, whether the coils are in one position or in the other position. Now, we are asked to judge that by ear only. And what may seem to us to be an unobjectionable difference may be a very important one commercially in better sets. The point is whether there is a difference between the coils in one condition or the other, in one set, rather than to test merely the hum in one set and in the other.

The Court: Well, I would like to ask a couple of questions in connection with that.

(The witness then returned to the stand.)

The Court: Mr. Dumont, have you any explanation to give, any reason to give for these two sets being of identical models, presumably having had a different amount of use, or probably so? Is there any reason in your mind why one should operate any different from the other?

The Witness: There are several reasons that will cause difference in operation. If the tubes are not correct—by that I mean if there are any of the tubes which have low emission, or other defects, they will introduce distortion and hum in that set. The other thing that could cause the difference is the fact that possibly the position of some of the elements at the bottom of the machine have been shifted in experimenting with it, or that there possibly may have been some values changed under there.

The Court: Some of the what?

The Witness: Some values of the inductances and resistances have been changed.

The Court: How would that happen?

The Witness: By experimenting with the set, and possibly applying incorrect voltages to it. They have the terminals brought out, and they were making various tests on it; and if by any chance the incorrect voltages were applied on the set, it would change the resistance or change the capacities inside the set.

The Court: That is all?

Mr. Edwards: Just a minute, I am not through.

Mr. Darby: May I offer in evidence the receiver?

Mr. Edwards: I object to it as immaterial, and not established.

The Court: Objection overruled.

Mr. Edwards: May I have an exception, please, sir?

The Court: Yes.

Mr. Darby: They will be Exhibit H.

(Receiver referred to marked "Defendants' Exhibit H.")

Q. (By Mr. Edwards) Mr. Dumont, as between two different sets of the same model, one may have more output than the other by reason of different tubes or some part dampening the connection as a whole, might it not? A. The receivers as manufactured are all tested and they must have a certain sensitivity before they are shipped out of the factory, within very narrow limits.

Q. Well, that is not my question, sir, as to what the manufacturer does. I am asking that as between two different sets, if you might have two sets of the same model, if one set happened to have bad tubes, or some part that is dampening the circuit, in that case you might get less output in the model after use, or more output in the other, might you not? A. Yes, that is true.

Q. Now, in the same set, however, is there any cause that would make the set hum more if the field coils are reversed and put into one condition, than it would if the coils were put back in to the cumulative position? A. Why, certainly, we have agreed on that.

Q. That is to say, in the same set, the test would be simply reversing the coils? A. That is right.

The Witness: I am not connected with the plaintiff company. I am not in the factory. I did not design any of these sets, nor superintend their manufacture. I think I saw this set the first time yesterday.

The Court: You said you were not connected with the plaintiff company.

Mr. Edwards: The defendant company, I meant, with the defendant, or the Stewart-Warner Company.

The Witness: No. I am not connected with either the defendant or Stewart-Warner and I am not in the Stewart-Warner factory, and do not follow their machines. It is true that I said that this set which I brought in was the same as the 104 loud speaker that was in the former litigation, except for the presence of the copper ring.

Q. Do you know if the armature coil, that is, the coil connected to the output of the receiver, the armature coil of the loud speaker and the field coil of the loud speaker were wound in phase opposition to each other or not? A. The only thing I know about that is the previous testimony in the case; and it was brought out that there was an attempt made at the factory to connect it one way or the other.

Mr. Edwards: Well, now, I am not asking him for his secondary knowledge, and I ask to have that answer stricken out. Your Honor, I ask that the answer of the witness be stricken out, if you please.

Mr. Darby: I object to the striking out of the testimony.

The Court: I will allow it to stand.

Mr. Edwards: May I have an exception?

The Court: Very well.

Q. (By Mr. Edwards) You never saw that speaker, the 104 speaker that was in that other litigation, did you? A. I did not see the other 104 speaker, but I have used plenty of them.

Q. Now, that answers my question. I am speaking of the one that was in that litigation. A. I did not see that one.

Q. And you have no reason to say that the coils of the speaker in that 104 loud speaker were in phase opposition, have you? You have no reason to assert of your own knowledge that they were? A. No, sir.

Q. You have no personal knowledge yourself as to the practice in the Stewart-Warner Company in actually winding their coils, have you? A. No, sir.

Mr. Edwards: That is all that I have of Mr. Dumont, but I would like to ask the defendants and your Honor for permission for our experts to look at the radio set that was brought in here by the defendant, and to make some tests ourselves. We believe that we can show your Honor that there is a pronounced difference between the coils when connected.

The Court: You mean you want me to listen to it again?

Mr. Edwards: I want to let our experts make some tests of the receivers which ~~they~~ brought in.

The Court: All right, that is all, Mr. Dumont.

Mr. Darby: That is all, Mr. Dumont.

(Examination of witness concluded.)

The Court: Do you want to make the tests now that I can hear?

Mr. Edwards: Yes.

Mr. Brady: We would like to have the gentlemen look at it, and then make our tests.

Mr. Darby: I am certainly going to object. They can have the receiver, but I do not want them to alter one thing about it.

The Court: I thought the tests had just been made. Mr. Lowell made them.

Mr. Edwards: Oh, no, Mr. Dumont made the tests, I believe. I do not understand Mr. Lowell did.

Mr. Brady: I would like to have Mr. Lowell have the opportunity to inspect the apparatus closely.

The Court: Oh, you are talking about the apparatus that was brought in.

Mr. Brady: Yes.

Mr. Darby: You can inspect it, but I do not want you to change it from its present commercial status to something else.

Mr. Edwards: It is not its commercial status.

The Court: You say it is not its commercial status?

Mr. Edwards: I insist there is nothing to show that. Mr. Dumont simply saw this yesterday and brought it in from some place where he says he found it.

The Court: If that evidence is not contradicted I have to accept it. The machine works—I listened to it —and it gives good music and voice.

Mr. Edwards: It is a Stewart Warner set, perhaps, but it is not the set complained of.

Mr. Darby: It is one of the sets complained of. They complained of set 109, and here it is.

Mr. Edwards: If these coils are not in phase opposition we have no complaint.

Mr. Lowell: I want to make sure that the moving coil is perfectly free to move in the air gap because I have seen such instances where a slight friction on the moving coil would effectively suppress hum but reproduce signals.

Mr. Brady: Can you make that inspection?

Mr. Lowell: If I can get at the front of that.

Mr. Brady: Can you do that merely by removing the speaker unit from the case? There are three nuts you have to move.

The Court: Go ahead.

Mr. Darby: I would like to have it noted in the record before he does that that you can tell from an inspection of the equipment that it has never been taken out of the cabinet since its purchase.

The Court: Why do you have to take that apart?

A. To get at the moving coil which is behind that cloth at the present time.

Mr. Darby: This is an exhibit that I would like to keep intact.

Mr. Brady: Then the easier way would be to cut the front cloth.

The Court: You can replace the cloth. Go ahead and cut the cloth.

Mr. Darby: We have to return the set.

Mr. Dunmore: Take those three nuts out and pull it out. You can preserve the set intact.

Mr. Brady: While we are waiting there is a second test I would like to have, which is the determination of the quantity of hum. We have a test apparatus here which will show us the amount of hum available in a set, and if your Honor permits Mr. Lowell to make two connections to that set he will demonstrate the amount of hum in the set.

Mr. Lowell: This set is all right.

Mr. Brady: Now, will you permit us to run the test?

The Court: Is that all right?

Mr. Lowell: Yes. I am satisfied as to the condition of the air gap.

The Court: Now, what is it that you want to run?

Mr. Brady: I want to run a filter test to determine the amount of hum in the set. It is a very simple test which will take a very short time. We have not proceeded with that test pending your decision, your Honor.

The Court: How long will it take?

Mr. Brady: A very short time. I should say five minutes.

The Court: All right.

Mr. Darby: Do you want this loud speaker left disconnected, or shall we connect it in again?

Mr. Brady: Let it lie on the table disconnected.

Mr. Darby: I likewise offer to complete my case, under stipulation by counsel for plaintiffs and defend-

ants that it be accepted in the present case with the same force and effect as though given in the present case, the following testimony relative to patent No. 1,606,212 given in the District Court of Delaware in the case of *Dubilier Condenser Corporation, et al. v. Radio Corporation of America,* the same being contained on the following pages in the typewritten transcript of the record in that case: Pages 187 to 206, inclusive; pages 370 to 382, inclusive; pages 883 to 886, inclusive; pages 1417 to 1444, inclusive; pages 1575 to 1581, inclusive; pages 1745 to 1748, inclusive; pages 1764 to 1772, inclusive, page 1817; pages 2016 to 2025, inclusive and pages 2079 to 2082, inclusive. I might say that that testimony is all directed to this very same thing, in one phase or another. It is all limited to this particular patent and the expert testimony is that in the modern radio receiver it does not make any difference what the phase relation is, if they use a hum filter, i. e. using a filter to eliminate the hum or to smooth out the current. That is a method of prevention. The patent in suit is directed solely to allowing the hum to be there, and then bucking it out. That is the method of cure. The two methods are entirely different. The patent in suit is directed to the second and limited expressly to the second method.

(The stipulated testimony follows:)

FREDERICK W. LEE, a witness called by the plaintiffs. (Being the same Frederick W. Lee who testified in the present case.)

DIRECT EXAMINATION.

Q90. I hand you a copy of Plaintiffs' Patent No. 1,606,212 and note that the patent states at page 1, line 17, and following, that one of its objects is to provide a circuit arrangement for a thermionic vacuum tube amplifier employing a loud speaking reproducer, in which the loudspeaker has its field winding energized from a source of residence lighting power without the use of primary or secondary batteries. Now what type of loudspeaker is it that has a field winding, as referred to in that part of the specification? A. A loudspeaker which has the field winding in the specification is commonly called an electrodynamic loudspeaker.

Q91. And just how does that type of loudspeaker function in reproducing sound? A. This type of loudspeaker may be divided into two separate portions. The first, we will call the field of this speaker, and the second,

we will call the armature of this speaker. The field of this speaker derives its strength from a current, preferably a current of such a nature which would cause no variation of the field in this speaker, and the armature derives its energy directly from the audio source which is generally a tube amplifying audio-frequency.

Q92. What is the difference between an electromagnetic loudspeaker and the permanent magnet type? A. The electromagnetic loudspeaker differs from the magnetic type in that the magnetic type has its source of magnetism in the residual magnetism of the core; whereas, in the electromagnetic type, the magnetism is secured by current; and therefore is of a much stronger nature than that of the type which does not use an exciting winding and functions much better for that reason.

Q93. In just what respect does it function better? A. It functions better for the reason that the amount of force applied to the moving diaphragm or cone depends upon the product of the field strength in the magnetic portion of the circuit, and the current in the armature portion of the circuit, and anything which would raise the strength of the magnetic portion of the circuit will thereby give a larger force than it would have had if it were not so.

Q94. Will you translate that last answer into the effect on the sound given out by the loudspeaker? A. The effect on the sound introduced by the loudspeaker, if you apply audio currents to the armature, is much more intense in the electrodynamic loudspeaker, which has a method of deriving its magnetism from a separate exciter winding than one in which it would not be present.

Q95. And what difficulties are present, if any, in operating the loudspeaker of this electromagnetic type in conjunction with an amplifier from alternating current? A. The difficulties introduced by operating a loudspeaker of electrodynamic type from an alternating current source, is due to the hum introduced by this method of excitation for the following reasons: First, the hum which is produced by the alternating current in the audio stage of amplification of the circuit, is produced in the horn in amplified condition; 2. The variation of the current through the plate circuit of the audio amplifier

also produces a hum when transferred to the armature of the electrodynamic loudspeaker. 3. The hum which is introduced by the exciting winding upon this electrodynamic loudspeaker is also reflected in the movement of the armature of the cone.

All of which both the variation of the current in the armature due to the alternating current as well as the variation of the current in the field due to alternating current tend to produce hum.

Q96. Referring to this diagram which I hand you, will you trace the circuit indicated in red on Fig. 1 of the patent stating whether that correctly describes the path of travel of the output circuit?

Mr. Barus: Is that simply Fig. 1 of the patent?

A. The current path in the audio amplifier output circuit designated in Patent No. 1,606,212 derives its alternating current power upon the alternating current supply at the terminals marked 27 and 28. Upon this primary winding 24 so connected to the alternating current power supply is also wound a secondary winding 21.

This secondary winding 21 serves as a source of energy for the plate circuit of the vacuum tubes and through it also the armature of the loud speaker. The raw alternating current from the terminals 21 is rectified by the coil 17 and the condenser 16 before it is applied to the plate circuit of the vacuum tubes 5 and 7.

The audiofrequency transformer 8 serves to couple up the plate circuit through the armature 9 of the electrodynamic loud speaker.

Mr. Neal: I offer this diagram in evidence.

(Received in evidence and marked "Plaintiffs' Exhibit No. 32.")

By Mr. Neal:

Q97. Will you state what means is provided in the patent for eliminating hum in this output circuit making use of the diagram which I now hand you, if you will? A. The neutralization of hum in the output circuit of Patent No. 1,606,212 is shown to be of two parts, first

the elimination of hum which might be introduced by the plate circuit and second the elimination of hum which may be due to the alternating current applied to the filament excitation. For the elimination of hum in the plate circuit there is provided the inductance 17 and the condenser 16 for rectifying the alternating current from the rectifying tube 18.

In the second portion of this circuit is shown a potential connection between the grid and the filament by the potential divider 11, which allows the application of a compensating potential between the grid and the filament for the elimination of hum introduced by the alternating current to the filament of the amplifier tube.

Mr. Neal: I offer the last-mentioned diagram in evidence.

(Received in evidence and marked "Plaintiffs' Exhibit No. 33.")

By Mr. Neal:

Q98. Will you describe the field winding current path in Fig. 1 of the above-patent making use of the diagram which I now hand you. A. The field current derives its source in the primary of the transformer designated as 27 and 28. This transformer has a secondary winding 24 connected through the rectifying tube 14 to the field winding of the electrodynamic loud speaker 10.

Mr. Neal: I offer this last mentioned diagram in evidence.

(Received in evidence and marked "Plaintiffs' Exhibit No. 34.")

Q99. I hand you another diagram and ask you to describe in what ways hum is eliminated from the field winding circuit, using this diagram if you wish? A. Hum which was introduced by the alternating current in the field winding 10 of this coil is eliminated in two ways, first, the inductance of that coil serves to even out the fluctuations of the current in that circuit, and second, the nature of the field itself tends to reduce the variation of the magnetic field in that circuit by the fact that the magnetic variations are not carried to the center portion of the field but distribute themselves under the field and

the operation of the armature is in the position not affected by this skin effect and the result is that the variations of the rectified circuit is thereby reduced before it enters into the armature 9.

Mr. Neal: I offer in evidence this last mentioned diagram.

(Received in evidence and marked "Plaintiffs' Exhibit No. 85.")

By Mr. Neal:

Q100. The patent says something about the opposing effects between the coils 9 and 10. A. There is a further method of eliminating the hum which exists in the armature and the field by so adjusting the various degrees of hum in the armature and the field that they may have a tendency to compensate each other.

Q101. Will you explain more fully what your previous answer related to when describing the skin effect and magnetic variations which did not affect the operation of the speaker very detrimentally? A. In an electrodynamic loud speaker having a solid core, around which is wound an exciting winding carrying alternating current, the effect of this alternating current is to produce a current in the core itself of such a nature as to oppose the magnetic motive forces introduced by the exciting winding and thereby neutralize the effect of the alternating current in the field winding itself. This current does not have to penetrate to the center of the core or the field, but it only enters a very small amount into the core itself. The higher the frequency the less the extent into the core.

Q102. This coil 10 of plaintiffs' patent does not have alternating current on it, does it? A. Plaintiffs' patent has direct rectified alternating current on it which is composed of a direct current upon which is superimposed an alternating current and the direct current portion is not influenced by the construction of the exciter and only the alternating current portion is allowed to be removed by this effect, thereby neutralizing the effect of the direct current and keeping a constant field and at the same time eliminating the effect of the alternating current in this field.

Q103. What part of the magnet 10 of the patent does the useful pull which affects the coil 9 come from, the inside or outside? A. The effect of the pull of armature 9 is affected from the portion of the field which comes from the inside of the coil.

Q104. And these variations which you speak of affect the outside of the core more particularly? A. The variation of the field in this core is at the outside portion of the core and not in the center portion of the core.

Mr. Neal: I offer in evidence a circuit diagram of defendant's loud speaker 104, which is stipulated to be accurate in so far as it goes.

Mr. Barus: Accurate in so far as it goes, but not complete; whether the details in which it is not complete are important or not I do not know at this stage of the case.

The Court: Then what is your desire? Do you intend to oppose the admission?

Mr. Barus: I am perfectly willing to let it go in.

The Court: But merely explaining your attitude?

Mr. Barus: Yes.

(Received in evidence and marked "Plaintiffs' Exhibit No. 36.")

By Mr. Neal:

Q105. Now, referring to Plaintiffs' Exhibit No. 36, do you find in that diagram an amplifying tube in combination with a loudspeaker of the electrodynamic type? A. There is an amplifying tube in connection with the loudspeaker, which loudspeaker I will call A, and an amplifying tube which is connected with it, which I will designate as B.

Q106. Now, will you trace the output current path of the amplifier tube, using these diagrams which I now hand you, if you wish. A. The output current path of the last tube leading into the loudspeaker derives its potential from the condenser C, which applies the positive polarity to the tube B at the plate. This tube B has been modulated by audio-frequency from an input circuit C, and the current follows through this plate to

the potential divider at the point D, thereby applying a voltage existing between the points E and D, which is not the full voltage of the rectified system on condenser C, but a portion F D has been taken off.

Q107. Will you continue with your last answer to trace the circuit from the amplifying tube B around through the remainder of the connections to the armature coil of the loudspeaker. A. In the plate circuit of the tube B is connected a transformer which I will call G, having on it a secondary H, which in turn is connected directly through the armature I of the loudspeaker.

Q108. You stated that the potential for this output circuit was derived from a condenser C. Will you state just how that potential is applied to this condenser back toward the source? A. The condenser C′ derives——

Mr. Neal: The witness marks the input circuit C′ instead of C.

A. (continuing) Condenser C derives its potential from the alternating current source which I will call 1 and 2 serving as a primary upon the transformer 3. The transformer 3 has a secondary which I will call 4 connected to two rectifying tubes which I will call 5 and 6. These two rectifying tubes 5 and 6 serve to make use of wave rectification and this rectified alternating current is supplied to the condenser C through the field winding of the electromagnetic loudspeaker and the filtering device which I will call 7. The tubes 5 and 6 receive their filament excitation from the exciting secondary which I will call 8. In this rectified alternating current is the potential of the condenser C.

Mr. Neal: I offer in evidence the diagram which the witness has just described.

(Received in evidence and marked "Plaintiffs' Exhibit No. 37.")

By Mr. Neal:

Q109. Will you describe what means, if any, are employed in this output circuit just described for eliminating hum making use of this further diagram if you wish? A. This diagram of loudspeaker No. 104 shows a neutralization of hum in the output circuit by applying a neutralizing potential to the tube B. This alternating

neutralizing potential is secured from the tap on the secondary of the winding of the transformer which excites the filament B. This tap I will call 9. In this way there is a compensating potential applied between the grid and the filament of the tube B which has a property of eliminating hum in this tube.

As will be noticed, there is also a condenser C which of itself is a rectifying device and has a tendency to keep the plate of tube B at a constant potential, both of which are hum eliminating methods.

Mr. Neal: I offer the last mentioned diagram in evidence.

(Received in evidence and marked "Plaintiffs' Exhibit No. 38.")

By Mr. Neal:

Q110. Will you compare the methods of eliminating hum in Plaintiffs' Exhibit 33 showing plaintiffs' patents output circuit with those of Exhibit No. 38, as to differences and similarity? A. Comparing Plaintiffs' Exhibit 33 to that of Plaintiffs' Exhibit No. 38, the patent circuit 1,606,212 has two methods of eliminating hum. The method is of applying a compensating potential to the tube 7 from a potential divided 11, this latter potential divided being placed across the filament terminals and serves to apply the compensating potential to the tube in the tube in the patent.

The loudspeaker of the Plaintiffs' Exhibit No. 38 applies a similar compensating device on the audio tube. Also the patent shows a condenser 16 and 17 for eliminating the hum in the plate circuit and the Plaintiffs' Exhibit No. 38 shows the choke coil of the loudspeaker and the condenser C, together with condenser C' as hum eliminating means.

Q111. Will you describe the field winding current both in defendant's loudspeaker 104 referring if you wish to this diagram which I now hand you? A. The current path of the field winding of the 104 loudspeaker derives its power from the alternating current supply of the system which I will call on this diagram primary terminals 1 and 2. It has a secondary winding 4 connected through the rectifying tubes 5 and 6 which apply the

rectified circuit to the condenser 7. This condenser 7 in conjunction with the condenser C and the field winding of the loudspeaker are the rectifying portions of this circuit. This rectified portion in turn supplies current to a potential divider system which I will call E F so that the current which normally flows through the field winding of the electrodynamic loudspeaker is that supplied to the condenser C as well as that going through the potential divider E F.

There is therefore the smoothing action of the rectifier incorporated in the field winding of the electrodynamic loudspeaker and ripples which come through this winding in the form of higher frequencies pass partially through the condenser G, so that in this circuit the field winding acts also as a rectifying device for the alternating current supply to the plate circuit.

Q112. What do you mean by "rectifying device" as stated in your last answer? A. The rectifying device in this circuit consists of the condenser 7, the field winding of the coil and this condenser C.

Q113. Is that a rectifier in the sense that it changes the alternating current into direct current? A. The purpose of the rectifying device is to change the variable potential as supplied from the alternating current transformer 4 through the tubes 5 and 6, to a system which alters the variation normally present in alternating currents to the constant potential which is found to be at the condenser C.

The Court: Do I understand the answer to the question is yes or no? Read the question.

(Question repeated.)

The Witness: I beg your pardon. What are you talking about, this exciting field?

Q114. You referred to the field winding of the loudspeaker as a rectifier, and I was wondering whether you were using the word "rectifier" in the sense of something which converts or changes alternating current into direct current? A. No, that rectifier serves to iron out the frequencies which exist.

Mr. Neal: I offer this last mentioned diagram in evidence.

(Received in evidence and marked "Plaintiffs' Exhibit No. 39.")

Q115. How does this further diagram which I now hand you, compare with the description which you gave in your preceding answer as to the parts of defendant's field circuit which serve to reduce hum? A. The field circuit of the exciter serves to reduce hum in this system in their way similar to that of the patent No. 1,606,212. The choking action of the coil tending to keep the current constant through that coil helps to reduce the hum, and it also has the property of keeping the magnetism of this core uniform by what I would call the skin magnetization of the coil. In addition to this, there is a small condenser at the beginning which helps to prevent the variations from reaching the exciting winding of the horn.

Mr. Edwards: Suppose you identify that.

The Witness: This last condenser we will call 7.

Mr. Neal: I offer this last mentioned diagram in evidence.

(Received in evidence and marked "Plaintiffs' Exhibit No. 40.")

By Mr. Neal:

Q116. Now, referring to Plaintiffs' Exhibit No. 40, do you find that the armature and field coils of the loudspeaker are connected in such a way as to produce an opposed phase reaction tending to neutralize hum, or otherwise? A. The circuit as indicated in the loudspeaker 104 for neutralizing hum between the armature and the field circuit may be existent, but need not necessarily be present, since there is polarity indications on this diagram showing the care with which the armature should be connected to the transformer, which I will call G. If there were hum elimination because of the compensation polarity arrangements would have been indicated. I take it that this system may operate on the principle of removing hum, but not necessarily be using that principle with this circuit.

Q117. Do I understand your answer to be that that phase opposition is not necessarily present? A. The phase opposition may be present, but not necessarily so.

Q118. Now, turning back to the operation of the loud-

speaker shown in Plaintiffs' patent, what portion of hum does the phase opposing action act upon? Is it all of the hum or only such as has already been acted upon by the coil 10? A. The phase opposition of the plaintiffs may be considered to be a refinement of the extra elimination of hum which can not be taken care of by the compensating device, and also the exciting winding and its reactions in the circuit.

Q119. The exciting winding being— A. The exciting winding being No. 10.

Q120. From the technical standpoint what weight would you give to the fact that plaintiff's circuit includes two rectifying devices for tubes 14 and 18 for supplying rectified potential to the system while defendant's system derives its potential from the same full wave rectifiers which you have referred to above? A. The Patent No. 1,606,212 shows two sources of rectified current, one for the plate and a separate one for the exciter. There is no reason why the same source of rectified alternating current could not be applied to both the exciter and the plate circuit of the system which has been incorporated by the plaintiff's Exhibit 36.

Q121. My question was intended to bring out whether or not you regarded that as an important difference from the technical standpoint. A. From the technical standpoint there is no difference.

Q122. Does that difference involve any question as regards the size of rectifying tube employed? I mean would you employ a different power of tube for the whole system from what you would employing separate tubes for the two parts of the system? A. I would use a tube of sufficient size to take care of the proper amount of rectified current necessary to operate both in case I was just using one unit.

Q123. And if two rectifiers were employed, how would their comparative size be? A. Their comparative size would be sufficient to meet the demands of their respective circuits.

CROSS-EXAMINATION

XQ501. Referring to Patent No. 1,606,212, the patent states at page 2, lines 61 et seq. the following:

"In spite of the fact that the sole source of power for this circuit is from the 60-cycle alternating current source, there is practically no resultant hum in the loud speaking telephone due to the reactance offered by the

winding 10 and the cooperative effect of this winding with the output circuit of the amplifier system. That is to say, the inductance of the field coil 10 is selected of such value and the power amplifier is so connected with the winding 9 that pulsations in the field winding are effectively opposite in phase to the phase of the pulsations in the output circuit of the amplifier so that there is a tendency for the disturbing currents to be neutralized as a result of which the armature remains stationary so far as the effects of disturbing current components are concerned."

Do you understand that there are disturbing pulsations in the moving coil of the 104 loud speaker? A. From the diagram submitted of your circuit I could gather that there could be disturbances of this kind, but I can also infer that it may not necessarily be present.

XQ502. Have you ever seen or tested a 104 loud speaker to determine whether or not they were present? A. We have reversed the polarity on your 102 loud speaker which does not really imply that the polarity with the currents in the two circuits are 180 degrees out of the phase, and there may not be any compensation due to the difference in phase between those two currents, and we found that there was no difference in hum, but it need not necessarily state that the principle of compensation as exists between the field winding and the armature winding is not present in that circuit.

It also might be inferred that the variations which exist in that thing may be of a too small magnitude to be observed by making the interchange of connections to show whether there was a variation. There may be also the case that you have smoothed out the variations so that it was not necessary to compensate in this way.

XQ503. If there was any such variation present, as I understand your testimony, they were so small as not to be appreciable, is that right? A. I did not carry on very refined tests, and I only utilized the ordinary audition.

XQ504. The differences were not such that you could determine by ear whether or not this effect existed in the 104 loud speaker? A. I could not detect in my ear that such a condition existed.

XQ505. What other method, if any, for eliminating hum in a loud speaker connected to a power amplifier is disclosed in Patent No. 1,606,212 and in answering that question please point out the lines of the specification to which you refer as giving such instruction. A. The portions of the patent which specify hum elimination are as follows: On page 1, line 17, reading as follows:

"A further object of the invention is to provide a circuit arrangement for a thermionic vacuum tube amplifier employing a loud speaking reproducer in which the loud speaker has its field winding energized from a source of residence lighting power without the use of primary or secondary batteries.

"A still further object of the invention is to provide means for eliminating the hum of the low frequency alternating current power supply in the circuits of the thermionic vacuum tube amplifier and reproducer."

"Another object of the invention is to provide means for rectifying alternating current and smoothing out the rectified energy to provide a source of power for the circuits of the thermionic vacuum tubes and loud speaking reproducer."

The details of the circuit and things of that kind are understood in the following portion, line 49: and it will be understood that I am not interpreting patents, I am not interpreting the art in this interpretation of what I gather is the art employed:

"It will be understood that the principles of our invention may be embodied in various forms and that details are not material. The present embodiment of the invention, therefore, is to be considered as merely indicative. The form illustrated in the drawing and hereinafter described in detail has been found to be one of the practical embodiments and capable of efficient operation and practical in construction."

On the same page, line 65, it says as follows:

"The unit includes a plurality of thermionic vacuum tubes connected in circuit for audio frequency amplification. The loud speaking telephone may be of the type employing a coil armature and electromagnetic field coil."

Further down in the page, at line 80:

"Rectifiers are employed in the unit whereby energy derived from other windings is rectified and supplied as a source of plate circuit potential for the vacuum tube amplifier and as a supply for energizing the field of the loud speaking reproducer. The rectifiers are preferably of the two electrode valve construction and have their filaments energized from other windings on the transformer. Means are provided for biasing the grids of the vacuum tubes comprising the amplifier. Means are also included in the circuits of the amplifier for eliminating the hum from the alternating current power supply and means are included in the equipment for smoothing out the rectified energy supplied to the plate circuits of the amplifier."

It reads right down to line 97.

Then at the bottom of page 1, line 110, beginning with the last word on that page:

"The purpose of stabilizer 11 is to keep the normal voltage of the grid at a steady value with respect to the filament and eliminate the hum of the alternating current supply while the negative voltage from battery 12 holds the grid at its best potential for amplifying purposes."

Further down, line 15:

"The secondary of audio frequency transformer 6 is connected to the grid of tube 7 and to stabilizer 11, with series grid battery 12, functioning the same as in the first stage."

Continuing on after that last sentence:

"In the output or plate circuit of tube 7 the primary of the telephone transformer 8 is connected, which has a one to one ratio of winding. This transformer also serves to reduce the hum of the alternating current supply."

Further down on the page, line 40, on page 2:

"Winding 21 supplies high voltage for the plates of the amplifier tubes 5 and 7, said high voltage being rectified by tube 18 and smoothed out by condenser 16 which is about 4 microfarads capacity, and a choke coil 17.

This provides a high voltage direct current which is suitable for the plates of the amplifying tubes."

Line 56, on page 2 states:

"The filament of this tube is lighted from winding 25 of transformer 29 and winding 26 supplies the proper voltage which is rectified by tungar tube 14 and applied to the field winding 10."

Now, on the same page, line 61:

"In spite of the fact that the sole source of power for this circuit is from the 60 cycle alternating current source, there is practically no resultant hum in the loud speaking telephone due to the reactance offered by the winding 10 and the cooperative effect of this winding with the output circuit of the amplifier system. That is to say the inductance of the field coil 10 is selected of such value and the power amplifier is so connected with the winding 9 that pulsations in the field winding are effectively opposite in phase to the phase of the pulsations in the output circuit of the amplifier so that there is a tendency for the disturbing current to be neutralized as a result of which the armature remains stationary so far as the effects of disturbing current components are concerned."

Then on page 2, line 93:

"In the plate circuit of tube 5, in series with the primary of the audio frequency transformer 6, is a condenser 32 of about .02 microfarads shunted by a resistance of approximately 80,000 ohms. This condenser serves to partially block the 60 cycle hum, but allows the higher frequencies to pass through. The shunt resistance allows the direct current plate voltage to reach the plate around the condenser, but serves as a block to the low frequency hum."

"In series with the secondary of the audio frequency transformer 6 in the grid circuit of tube 7 is a .02 microfarad condenser 31 shunted by a 2 megohm resistance. This condenser and leak 31 function the same as condenser and leak 36 in eliminating any low frequency hum."

Lines 110 to 116 as follows:

"A .02 microfarad condenser shunted by an 80,000 ohm resistance 34 is in series with the plate circuit of tube 7 and functions in the same manner as condenser and resistance 32 to eliminate any residual low frequency hum."

"Condenser 35 is about .005 microfarads capacity and is in series with the secondary of the telephone transformer 8. It also serves as a partial block to any low frequency hum which may be present."

Pages 3, lines 10 to 17:

"The sliders of rheostats 11 and 30 are adjusted to an electrical mid-point in the resistance, at which point the voltage impressed on the grid of tubes 5 and 7 from the A.C. supply is steady or of very small value. By this adjustment the hum is eliminated from the reproducer circuits. * * *

"It will be understood that we are not limited to the use of a reproducer employing a field winding but that any type of reproducer may be employed."

This latter statement indicates that hum is eliminated not as a compensation device described before with the armature and field reacting with each other.

Page 3, line 24:

"The disturbing pulsations which may be present in the winding 9 are of opposite phase by virtue of the phase shifting circuit 8-9, than the phase of disturbing pulsations or currents in the winding 10. The mutual effect therefore is nil as the pulsations tend to be neutralized and have no effect upon the armature."

I think that covers in substance the methods of hum elimination.

XQ506. If I correctly understood your answer, the only instructions which the patent contains as to how to connect a loud speaker of the electrodynamic type to an amplifier are as follows: First, the instruction contained at lines 69 to 80 on page 2, regarding so selecting value—of the inductance of the field coil, and so connecting the power amplifier with the winding 9, which is the armature coil, that pulsations in the field winding are effectively opposite in phase to the phase of the pulsations in the output circuit. Secondly, a method which consists

in making an amplifier which does not hum and connecting it to any loudspeaker which does not hum; is that correct?

Mr. Edwards: I object to that. The patent speaks for itself. I think we, as layman, can read the patent on that subject. I think that is outside of the direct examination, and it seems to be taking the time of the Court unnecessarily to go over the patent specification with this witness.

The Court: What have you to say, Mr. Barus? Wherein does it come in on cross-examination?

Mr. Barus: The witness has testified concerning the use of this patent in the defendant's loudspeaker 104. He has further testified that a specific method of connecting and selecting a field coil magnet is not used to any appreciable extent in our loudspeaker, if I have correctly understood his testimony.

Mr. Edwards: But he did not testify as to whether any particular part of the apparatus was disclosed in any part of the specification. The testimony was general as to the device shown in the drawings and generally referred to in the patent.

The Court: Do you press your question, Mr. Barus?

Mr. Barus: I withdraw the question, I guess I am under this difficulty, that except for some construction of the claim, I can not understand anything how we can infringe.

The Court: I understand that.

Mr. Barus: And I do not understand how the witness has alleged or described anything in our patent which leads to his conclusion.

The Court: I have assumed that to be your position.

Mr. Barus: I do not know of the case we have to meet and I would like to find out. I confess I do not know how to do it in view of the fact——

Mr. Edwards: This witness was not called as a lawyer to testify as to the argumentative infringement of the patent. That, as counsel, we reserve to ourselves.

GLENN W. CARPENTER, a witness called by the defendant.

DIRECT EXAMINATION

Resident of Schenectady, New York, employed by the General Electric Company as radio engineer in charge of development and design of broadcast receivers. From February, 1918 until March, 1921 he was radio engineer at the Washington Navy Yard, Washington, D. C. In March, 1921 until June, 1922 he was engineer in charge of the development and design of commercial receivers for the Federal Telegraph Company of Palo Alto, California. From June, 1922 until November of that year he was in business for himself manufacturing audio frequency transformers and a small receiver. He entered the employ of the General Electric Company on November 1, 1922. During the summer of 1918, while with the Navy Department, he started the development of the first receiver made for the Navy of the type which consisted of untuned radio frequency stages, a detector and audio frequency stages, which receiver was known as the SE-1405. He also designed similar receivers for the Navy known as SE-1605, as well as SE-1617 and SE-1615.

Q42. State whether or not in the manufacture of the 104 the wires which lead from the moving coil and field coil are marked in any way to indicate the manner in which they should be connected to their respective binding posts in the loud speaker amplifier? A. They are not marked and it makes no difference.

Q43. State whether or not you ever gave any instructions to the factory with respect to the manner in which the leads from the armature coil or the field coil should be connected to the binding posts in assembling the 104 loud speaker? A. I gave no instructions to that effect.

Q43a. Does it make any difference which way they are connected? A. No.

Q44. Why not? A. We used a method that eliminates the coupling between the field coil of the loud speaker and the armature of that speaker, and which also steadies the magnetic flux in the area and therefore the speaker is an independent part of the system.

Q45. And by the speaker you mean the pot magnet of the moving coil as distinguished from the power amplifier device which has been referred to as the 104 loud speaker? A. Yes.

Q46. What arrangement or means do you employ for this purpose? A. We use what is commonly called a

copper shading coil and this shading coil is located between—that is nothing but a large copper disc and it is not a winding—and it is located between the field coil and the armature coil.

Q47. What is the effect of that large copper disc? A. It eliminates the coupling between the field coil and the armature coil, thereby making it impossible to transfer the power from one coil to the other and steadies the magnetic flux in that area.

Q48. Have you ever operated the 104 speaker with these copper shading coils removed, and if so, what was the result? A. I have done that and the hum is very much greater without the shading coil, the hum produced in that loud speaker.

Q49. And by the loud speaker do you refer to the speaker in the limited sense of the pot magnet in the armature or in the broad sense of the whole device? A. In the limited sense, that is, as a pot magnet; in the limited sense speaking of the field coil and the armature coil.

Q50. Have these copper rings any effect upon the operation of the amplifier device in the 104 loud speaker as distinguished from the operation of the pot magnet? A. None.

Q51. State whether or not you have operated the 104 loud speaker with the field magnet removed from the filter system and equivalent inductance substituted for it so as not to change the filtering effect, and did then separately energize the field magnet at some distant point with commutated current from a D.C. generator and supplied the moving coil with signal from the amplifier? A. Yes.

Q52. And if so, did that make any appreciable difference in the hum produced in the loud speaker? A. Yes, I have done that and it makes no appreciable difference in the hum produced in the loud speaker.

Q53. For what purpose did you do that? A. That becomes necessary when you are required to operate a relatively large number of loud speakers all from the same amplifier, that is, the field takes so much energy when you use more than one or two, that it is necessary to supply the field with a separate power source.

Q54. And is that something that you have had occasion to do frequently? A. Yes.

Q55. That is done for work in auditoriums and the like where you wish to have a large number of loud speakers about the place? A. Yes.

FRANK WATERMAN, (a patent expert) produced by the defendant.

DIRECT EXAMINATION.

Q198. Please explain the disclosure of the Dunmore and Lowell patent in suit No. 1,606,212. A. The Dunmore and Lowell patent No. 1,606,212 shows an audio-frequency amplifier whose filament and plate voltages are supplied from alternating current and associated with a speaker of the so-called electrodynamic type originally described as a Magnavox speaker.

In Fig. 1 the grid biasing voltages of the tubes 5 and 7 are obtained from a battery 12, the grid return being to a slidable connection upon a potentiometer 11 connected in shunt to the filament supply mains. The filaments are lighted from a transformer 20 through a rheostat 15 and are connected in parallel.

The plate voltage is supplied from a secondary 21. It passes through a half wave rectifier tube 18 and thence through a coil 17, which is entirely without function, through the bottom wire and up to the top of the diagram where it passes through the primary of the transformer 8 to the plate of tube 7 and through the primary of transformer 6 to the plate of tube 5, the return being to one side of the filament where the condenser 16 is connected and also the right hand end of the secondary 21.

There is thus a half wave rectifier with a condenser 16 connected across it and a choke coil 17 connected in series between the tube and the condenser tap.

Since this is a half wave rectifier that choke coil 17 is functionless. In other words, as soon as a wave in one direction has passed the tube becomes open circuit and it is impossible for a choke to do anything in the way of prolonging the smoothing out of the current when it is so located.

In other words, a half wave rectifier does not permit of such a device. It is on the wrong side of the condenser 16.

There is, therefore, only the filter condenser 16 for converting the intermittent half waves of alternating electro-motive force into anything approximating a continuous current voltage.

The loud speaker or Magnavox 9-10 is shown as having its moving coil 9 associated with a transformer 8, the primary of which is in the output circuit of the tube 7. The signals received are therefore arranged to give rise to current in the coil 9. Also all hum introduced by virtue of the inadequate filtering of the plate supply and all hum introduced by virtue of the character of the filaments, their fluctuating temperature, their magnetic field, their electrostatic field, are similarly introduced into the coil 9.

The compensating or cure method is attempted as in the Lowell and Dunmore patent where I have fully discussed this, that is to say, the plate return is to one leg of the filament, thereby voltages are introduced in the plate circuit of an alternating current nature corresponding to the voltage across the filament.

To compensate for this a voltage is introduced into the grid circuit by approximate adjustment of the slider on the potentiometer 11. Whatever may be the ultimate effect of this, any remaining currents are transferred to the moving coil 9 of the loud speaker. The magnet 10 of the Magnavox is excited from a secondary 26 through a rectifying tube 14, the filament is lighted by secondary 25. No attempt is made to smooth out this current. It is a well known fact that a magnet and also the Magnavox in particular had the capacity for smoothing out any amount of ripple by its own inductance; but this is not just a certain kind of ripple. This is full current part of the time, and no current rises all the time; and furthermore, it is in connection with the half wave rectifier, which has resistance half the time. It results that in the magnet 10 there are pulsations and in the coil 9 there are pulsations; and the specifications as issued have two passages inserted during the prosecution of the case, as I find from the file wrapper, one beginning with the word "due" in line 63 of page 2, and extending over to line 80 of the same page, and another beginning with the words "the disturbing," in line 24 of page 3, and extending to line 32, which passages state

that the disturbing pulsations or the pulsations which would be disturbing in a telephone or a speaker of the magnetic type, are cancelled out by so relating the phase and magnitude of the pulsations in magnet 10 to the pulsations in the coil 9, that the coil 9 does not move in the field in response to such pulsations. There is no description as to how that is done. It is merely said that the inductance of the field coil 10 is selected of such value and the power amplifier is so connected with the winding 9 that pulsations in the field winding are effectively opposite in phase to the pulsations in the output circuit of the amplifier. How that can be brought about I do not know and the patent does not enlighten one.

The electrical relations involved are these—and in speaking of them it is necessary to have in mind the structure of the speaker, and the patent originally did not contain a reference to electrodynamic speakers, it referred to the Magnavox feature, a construction well known——

Mr. Edwards: I object to that. This witness has no knowledge of that. It is a matter of record, and I ask that be stricken out.

The Court: I think the motion is properly made and is granted.

Mr. Barus: May I state, your Honor, that the file history does show that as originally filed, the application referred to the Magnavox speaker, and that on objection of the Patent Office the trade name "electrodynamic" was inserted, and "Magnavox" deleted.

The Court: You have reference to that?

Mr. Barus: I was calling that to your Honor's attention in connection with the witness's testimony.

The Witness (continuing): "In order to give any interpretation to the language of the patent, it is necessary to have in mind a structure, and in explaining therefore what the patentees probably meant, I will have in mind the construction of a once well-known electrodynamic speaker known by the trade name "Magnavox", the construction of which I am familiar with."

In a speaker whose moving coil is inductively related to the field magnet in which the coil is to move, as is the

case in the Magnavox speaker, pulsations in the magnet 10 of the Dunmore and Lowell patent would set up in the closed circuit constituted by the coil 9, and the secondary transformer 8, electro motive forces due to changing magnetic flux produced by the magnet 10. By themselves, those alternating electro-motive forces would cause currents to flow in the secondary of the transformer 8 and the coil 9; but they are already alternating currents presumed by the specification by the secondary of the transformer 8 and in the coil 9 which have come from the amplifier system.

Now, what the patentee proposes is that advantage should be taken of this inductive relation, and that the electro-motive forces which are induced by the pulsations in the magnet 10, should be exactly opposite in phase to those which are brought into the coil 9 from the amplifier, and if they were of opposite phase and also equal in magnitude, they would cancel out and that is the thing which the patentee proposes in the two passages on pages 2 and 3 respectively, to which I have called attention.

In Figure 2 of the Dunmore patent, a similar arrangement is shown. That is, there are two tubes with alternating current supply for their filaments, and for the plate voltage, and for the magnet of the electrodynamic speaker. You get the same letters of reference so that what I have said may be applied to either figure, except as to the method of biasing the grids of the two tubes, and as to certain other additional features which I will mention. The grid of the tube 5 is balanced as in the radio stages of Figure 1 of the Lowell and Dunmore patent, namely, by a grid leak and condenser combination 36, inserted in the grid return, and the latter goes to a shiftable point of potentiometer 30, connected across the filament supply wires. The grid of tube 7 similarly comes through a grid leak and condenser combination 31 to a shiftable connection on the potentiometer 11, also across the filament supply leads. There is therefore used here the grid condenser method of biasing which requires the flow of grid current in order to effect the bias.

In order to minimize the alternating currents introduced through the return of the plate circuit to one side

of the filament, this being exactly as I have already described in connection with Fig. 1—and the imperfect filtering of the plate supply, other instrumentals are introduced, such as the condenser and leak combination 32 and 34, found respectively in the primaries of the transformers 6 and 8.

My experience with arrangements of this kind indicate that they are simply amplification killers, that reduce hum only because they reduce everything else.

In the output circuit of the amplifier containing the coil 9, there is placed a condenser 35, the value for which is given in the specification at page 2, line 117, as about 0.005 microfarads. Unless I am mistaken in the figures which I have hastily made here, this condenser, while probably effective to keep 60 cycles out, would keep everything else out too, except the high frequencies; that is, it would be a condenser of enormous impedance to the signal alternating currents. Its impedance to 60 cycle alternating currents would be in the order of half a million ohms. Now may I have the question again.

Q199. The question was simply explain the function of the device of the Dunmore and Lowell patent. A. The foregoing I think is a correct general outline of the disclosure.

Q200. This condenser 35 to which you have just referred, how does that compare with the condenser 34 in the Lowell and Dunmore patent in suit, Fig. 2, and with the condensers of the V. H. Brown article in evidence, concerning which you have already testified, as corresponding to 34? A. It is the same as the condenser 24 of the Lowell and Dunmore patent No. 1,455,141, except that the magnitude of the latter is four times as great. It is the same in function as the condensers marked C.C. in the V. H. Brown article, Exhibit 35, and is for the same purpose as pointed out in that article.

Q201. Please refer briefly to the article entitled "Church Sermon heard half a mile" in the Electrical Experimentor of November 19, 1919, page 636, 684, 686 and 688 and explain the relation of that article to the Dunmore and Lowell patent No. 1,606,212.

Mr. Barus: I offer this article now in evidence.

(Received in evidence and marked "Defendant's Exhibit No. 77.")

A. This article refers to an electrodynamic speaker which it says is "known as the Magnavox". I recognize the construction shown in the diagrams on page 684 as illustrating the construction of a speaker known as the Magnavox, with which I was familiar at one time.

Referring for a moment to the figure on page 684, the magnets appear as the two black vertical columns, one of which is designated by the words "field magnetizing coil". The pole pieces are at the top, and there is a small space between them into which there descends a black body which in fact is half of the moving coil, the other half being bunched into a more or less circular form above it, and connected to the moving diaphragm of the speaker.

The field magnet corresponds to the part marked 10 in the Dunmore and Lowell patent, while the coil part of which is between the poles of the field magnet, which corresponds to the coil marked 9 in the Dunmore and Lowell patent.

The article describes the use of this speaker in certain tests, and describes the speaker as

"Electrodynamic" and says "The diaphragm is not acted upon directly by the magnetic flux from the electro magnet. Instead a minute insulated wire coil is placed in a small air gap about 1/16 inch long between the pole pieces of the powerful electro-magnet which pole pieces are magnetized north and south shown in the accompanying drawing."

It goes on to say that permanent magnets are not employed but that the field magnets are energized by currents which are applied to a coil wound upon them. The statement is made that the magnetizing coils consume only a small amount of current, or about 25 watts, and that the Magnavox speakers are supplied to operate on 6 or 8 or 12 volts direct current from the battery as desired, or on a 110 volts D.C., and it then states:

"That contrary to the general opinion no noticeable effect is caused in these reproducers when the latter current is used (that is 110 direct current from the house

lighting main). Due to the commutator ripple, as owing to the high impedance of the windings, the pulsations characterizing such direct current supply are smoothed out.

"The audio currents carried by such direct current supply means are in the nature of ripples superimposed upon a current which otherwise would be of the nature of the battery current, and the statement means that the high self-inductance of the magnets is sufficient to prevent fluctuations of the Magnavox magnetism, even though the current supply does not fluctuate."

Q202. Please refer to the patent to Pridham & Jensen, No. 1,105,924, and explain the differences there described in its relation to the Dunmore and Lowell patent?

Mr. Barus: The defendant offers in evidence the Pridham & Jensen patent.

(Received in evidence and marked "Defendant's Exhibit No. 78.")

A. The Pridham & Jensen Patent No. 1,105,924 relates to a dynamic speaker in which there is a field magnet excited by a current flowing through a winding and a moving coil suspended so as to be subject to the field and hence capable of motion when the coil is supplied by voice currents.

I will refer to Fig. 3, which is the figure in the lower righthand part of the drawing. The field magnet winding is indicated at 9 and the air gap is of annular form, being in the form of a narrow circular slot between an inner pole piece of annular shape and an outer pole piece of ring shape.

Coil 2 is connected mechanically to a diaphragm 11 and mounted so as to be within the field.

The patent explains that when currents having superimposed thereon ripples or alternating current voltages are employed for the field magnet, the fluctuations induce currents in the telephonic coil which, reacting upon the normal or average field strength of the magnet, produce vibrations which greatly interfere with the action of the instrument.

Those are induced voltages, induced in the manner in which I have explained in considering the Lowell and Dunmore patent, fluctuations in the magnetism of the field. Threading the moving coil set up therein electro-motive forces which are closed through the circuit supplying that coil and therefore produce hum in the sound coming from the speaker.

To prevent this the patentee connects in series with that coil 2 a coil 3, which is also threaded by similarly pulsated mechanism supplied by a coil 10 which in turn carries the same current as the coil 9 exciting the field magnet.

Here is a case permitting of definite proportioning, so that electro-motive forces may be introduced into the coil 2, which are equal and opposite to the electro-motive forces created in the coil 2 by the pulsations of field strength resulting from a variable current in the magnet coil 9.

This method of compensation or neutralization which is proposed in the Lowell and Dunmore patent, namely, to reduce in the circuit of the moving coil electro-motive forces equal and opposite to disturbing electro-motive forces existing there, is disclosed in this Pridham & Jensen patent.

Q203. Please explain the construction and operation of the 104 loud speaker with particular reference to its magnet and armature coil. A. The 104 loud speaker comprises in essence a large field magnet arranged to produce a very intense radio annular magnetic field. In this narrow annular slot, across which the magnetism extends, there is placed a light paper cylinder upon which an output coil carrying the output from the 210 tube of the power plant of the speaker is wound, and to this small cylinder a paper cone is attached, the vibration of which gives rise to the sounds carried by the received broadcasting and intended to be reproduced.

It is a speaker, therefore, of the electrodynamic type. In fundamental arrangement it differs from the electro-dynamic speaker to which I have just been referring in that the coil in the air gap is in essentially a static or non-ductive relation to the field.

I think I will have to make a sketch in order to explain that idea.

Q204. Mr. Waterman, at the close of yesterday's session, you were describing the 104 loudspeaker, with particular reference to the slot magnet and the armature field coil and relations between them. Will you please proceed with that answer. A. I have made a rough sketch which illustrates the relation which I was about to describe at the close of last evening. The magnet of the 104 speaker comprises a circular shell with a central cylindrical core. This is reduced in size at its end and passes through a hole in the shell. In this fragmentary sketch which I have produced, I show the extreme end part of the shell in section, marked M1, and the cylindrical core marked M2. In the annular space between the tubes, there is a coil of very fine wire which I have indicated by a few circles and marked C. The magnetism passing—I will assume from the central core M2 radially outward to the annular end M1 of the shell, passes parallel to the plane of the coil. It is therefore as nearly as possible in a non-inductive relation with respect to the field; it being well known that a coil laid parallel to the lines of force of a fluctuating field does not have electro-motive forces generated in it. By carefully positioning this coil, this condition of astatic of non-inductive relations may be very closely realized. This means that if the relation were perfectly realized, the pulsations in the field would have no effect in the way of generation of electro-motive forces in the coil; and the effect that is referred to in the Dunmore and Lowell patent could not be produced. It is a fact that the 104 speaker is entirely indifferent to the direction of connection of the coil, either of the moving part or of the field magnet. The effect upon the cancelling out program of the Lowell and Dunmore patent is based, depends upon a particular relation of connections; that is, if with one set of connections the action described in the patent is realized, so that there is no motion as the result of the pulsations of current, either in the field magnet or in the moving coil, and either one of those coils has its terminals reversed, then the electro-motive forces which formerly cancelled it, will give rise to currents exaggerating the effect.

So that a test to determine whether or not the effect of the patent is present consists in reversing the terminals. Reversing the terminals of either the field magnet or the moving coil in the 104 speaker has no effect whatever upon the hum produced. I understand that there is no controversy about that point and so I will not dwell upon it at length.

In the sketch which I have made I have indicated the lines of force by dotted arrows extending radially outward upon the center and parallel to the plane of the winding of the moving coil.

On the test proposed by the patent, therefore, this coil of the 104 speaker is not so constructed or positioned as to realize the effect upon which the cancelling out of hum components can be realized.

The magnet of the 104 speaker, as shown in my schematic diagram, loud speaker model 104, contains within the shell and surrounding the cylindrical core, when it receives the wave from the opening in the end, a magnetizing coil which occupies only a portion of the space. Adjacent to this magnetizing coil at the right thereof as seen in this diagram, there are three heavy copper rings which are seated upon turned shoulders making a very tight fit and also fitting tightly within the shell. The one immediately adjacent to the winding fits tightly within the main shell. The next one is smaller in diameter and fits in a recess in the righthand end member of the shell and the third one is still smaller in thickness, but of the same diameter and fits in the same recess.

These are very massive and constitute a complete shield from the effect of any pulsation or fluctuation of current in the field magnet.

So that the coil which carries the output of the amplifier and the signal currents is completely shielded by this massive copper set of shading coils or copper rings. This is a well known method of protecting one coil from the influence of the other and it results that the coil of the loud speaker which does the moving is completely shielded from effects due to currents in the magnetizing coil of the speaker.

The moving coil, therefore, is first so situated as to be indifferent to fluctuations and next completely shields

it from such fluctuation with the result that there is neither possibility of neutralizing effect or need of it.

The coil is used as the inductance of the Hull filter and with a very large magnet it constitutes a very large inductance. It is preceded in the filter combination of course by the first condenser which I have marked C-1 on my diagram, which is not a small condenser as has been intimated, but it is either a 7-microfarad condenser or a 4-microfarad condenser, different sizes having been used in different instruments, and it is therefore the largest or next to the largest condenser in the whole device.

Its effect upon the current produced by the full wave rectifier is to largely shunt out the alternating current components leaving a current with a relatively small ripple to pass through the coil of the speaker magnet.

Being a full wave rectifier and being thus deprived of the greater part of the ripple the magnet acts in the manner that is well known as the action of magnets in general and the Magnavox magnet in particular, to smooth out ripples and any ripple which gets through this magnet is shunted out by the large condenser C-2.

So that ultimately there is essentially pure direct current flowing to the volt picker. From the volt picker the voltage for the plate supply and current for that circuit is taken from a point 1 through the UX-210 amplifying tube and back to the volt picker. So that there is appreciably no alternating current in the output of the 210 amplifying tube which through the transformer 2 is put through the moving coil of the speaker.

Q205. Will you please compare the 104 loud speaker with the device of the Dunmore and Lowell patent in suit? A. A fundamental difference is the employment in the 104 speaker of a full wave rectifier as distinguished from a half wave rectifier. If I have understood the record correctly the magnet L of the loud speaker in my schematic diagram has been compared to the inductance coil——

Mr. Edwards: I object to Mr. Waterman attempting to construe the record and tell us what people have been comparing things with.

The Court: Objection sustained.

A. (Continued.) The field speaker magnet L of my schematic diagram illustrating the loud speaker model 104 has no analogy whatever to the choke coil 17 of the Dunmore and Lowell patent. That coil in the patent is functionless and its sole effect is to greatly reduce the efficiency of the rectifier. It is not a part of the filter organization.

The magnet of the 104 speaker is a part of a filter organization. It is supplied with current which is to a very large extent pure direct current because of the full wave filter and of the abstraction from the current delivered by that filter of most of its ripple by the condenser C-1.

This speaker magnet L is made in the organization to serve a double function. It acts as the inductance of a filter and at the same time is a magnet for the loud speaker.

In the Lowell and Dunmore patent the magnet 10 of the loud speaker is supplied through a half wave rectifier with no condenser or other smoothing means. The current necessarily, therefore, is to a large extent a pulsating and not a direct current. There is therefore a large amount of pulsation and the patentees contemplate the existence in the circuit comprising secondary of transformer 8 and the moving coil 9 so large an element of alternating current that the large amount in the magnet 10 shall be offset in its effects upon the coil 9 by the hum current coming through the amplifier. Such a condition does not exist in the 104 speaker. The method of prevention and not the method of cure is used in the 104 speaker. The current in the field magnet is to a large extent smooth. The field magnet is so located as to its function, largely as a smoothing means in accordance with the prior art which I have discussed, and the output or rather the plate voltage to the 210 amplifying tube which supplies the signal to the speaker, is so completely filtered and is produced by a full wave rectifier, so that it can be completely filtered, that it results that there is no perceptible alternating current ripple in the moving coil. There is no cooperation between the fixed magnetizing coil and the moving coil to produce therein any of

the cancelling out or curative effects which the patent relies upon, and as a matter of test the proof is complete when, by reversing the inter-coil——

Mr. Edwards: I object to that.

The Court: Sustained.

Mr. Edwards: I ask that reference be stricken out?

The Court: "The proof is complete" beginning there. The remainder goes out.

The Witness: As a matter of fact, my tests show that the reversal of the winding does not in fact influence the hum produced in the slightest degree. There is a hum if one gets close to it. Reversing the windings does not affect that hum, either in volume or quality.

The second figure of the patent shows resistance condenser combinations 31, 36, for biasing the amplifier tubes and resistance condenser combinations 32, 34 for suppressing hum introduced by the half wave rectifier into the plate circuit. Nothing of the sort is found in the 104 speaker.

Also the Dunmore and Lowell patent returns the plate circuits of the two amplifying tubes to one side of the filament and employs a battery 12 in connection with an adjustable slider on potentiometer 11 to compensate for the hum necessarily introduced by the return of the plate circuit to one side of the filament. No such arrangement is found in the 104 speaker. On the contrary, the prevention method is used. The grid and plate circuits both return to fixed mid tap on the center of the secondary lighting, the single amplifier marked 210 in my diagram, the secondary being marked S1. This is therefore the prevention method and not the cure method of the Dunmore and Lowell patent.

There are not in the 104 speaker as in the Dunmore and Lowell patent, two rectifiers. There is a single rectifier system. The Lowell and Dunmore patent has one rectifying tube 18, whose sole function is to supply the plate circuits. It has a second rectifier system, such as tube 14, whose sole function is to energize the field magnet 10. The 104 speaker has a single full wave rectifier system, and the output of that system does not separately

excite the field magnet but excites it in series; so that the current which passes through the UX-210 tube is first passed through the field magnet. That is an entirely different arrangement, based on an entirely different idea of means from this separate half wave rectifiers of the Dunmore and Lowell patent. The 104 speaker does not have two rectifiers. It has two UX-216 bulbs, of course. That is, merely because the power used is larger than can be safely handled in a single double bulb. It, however, constitutes one single rectifier tube, which is a full wave rectifier tube, and neither in construction or in operation is there any analogy between this full wave rectifier system of 104 and the two one-half wave rectifier systems of the Dunmore and Lowell patent.

Q206. Mr. Waterman, will you put some appropriate legend on the sketch of the 104 field magnet which you made in the course of your answer.

Mr. Barus: The defendant offers in evidence the sketch "Simplified Schematic Diagram Radiola 28 connected to loud speaker 104," which the witness referred to yesterday, and which did not get marked at the time.

(Received in evidence and marked "Defendant's Exhibit No. 79.")

The Witness: I have marked this diagrammatic sketch "104 loud speaker floating coil location."

Mr. Barus: The defendant offers in evidence the sketch which the witness has just referred to.

(Received in evidence and marked "Defendant's Exhibit No. 80.")

Mr. Barus: In the last answer the witness referred a number of times to the Lowell and Dunmore patent, when he obviously meant the Dunmore and Lowell patent. I wonder if that can be corrected?

The Court: That is the loud speaker patent?

Mr. Barus: Have you any objection to that being corrected by the stenographer?

Mr. Edwards: What is that?

The Court: Let the witness add—I have been speaking throughout of the loud speaker patent in suit, whether

I call it the Lowell and Dunmore or the Dunmore and Lowell patent; is that correct, Mr. Waterman?

The Witness: It is correct.

CROSS-EXAMINATION.

XQ522. Will you refer to your Exhibit No. 80, the sketch of the defendant's loud speaker floating coil location. The dotted lines with the arrows in the sketch are intended to indicate the magnetic flux? A. Yes. The principal flux.

XQ523. And this flux path is not complete in your sketch? A. Oh, no; just across the area.

XQ524. The complete path would be through the central magnet core in one end, say the end shown in your sketch there dividing into two paths, one path going to one side, and through the side portion of the magnet, and going back to the other end of the central core M 2, and the other branch having a corresponding path through the other part of the magnet? A. Yes. Except that that is a sectional view of a cylindrical structure so that the magnetic field must be considered as proceeding radially from a central core out in all directions to the surrounding shell.

XQ525. Yes. Now, this sketch does not show the copper ring that has been alluded to? A. No. It does not, except the position of the coil.

XQ526. Would you mind indicating in the sketch the position of that copper ring? A. There are three copper rings and the sketch is not made with such accuracy as to permit that. Their position is quite accurately shown in my diagram, which I have already produced, which is made from measurements though rather small, it may be taken as quite accurate as showing the position of the rings. There are three of them; one which fits the largest diameter to the shell, and also over the largest cylinder of the central core. Then there is another one fitting into a small turn recess and a smaller turn diameter of the coil and there is still another of the same diameter to separate.

XQ527. This diagram of the exhibit of the schematic diagram loudspeaker Model 104 is rather small, and I find it difficult to follow the location of all of these rings. Would you mind making an enlarged sketch which would indicate approximately the position of those rings with respect to the parts which are illustrated in your sketch, Exhibit No. 80? A. I made a sketch which was fragmen-

tary in its nature indicating a sectional view. The dotted cross hatching indicates the section of the outer cylindrical part and the solid cross hatching indicates the three rings.

XQ528. Would you mind lettering the three rings and the parts of the core of the magnet and will you add the position of the coil? A. I have done so.

XQ529. In this sketch the two portions of the magnet core corresponding to this Exhibit 80 are indicated as M-1, M-2 and the three copper rings by R-1, R-2, R-3 and the position of the coil by the letter C; that is correct, is it not? A. Yes.

XQ530. When the voltage of the current in the coil on the core M-2 changes due to ripple or other cause, that induces current in the rings R-1, R-2, R-3, does it not? A. Yes, any fluctuation of current in the magnetizing guard which is adjacent to and at the left of the rings tend to set up currents in the rings, which on account of the extremely low resistance of the ring prevent changes of magnetism at the right of the ring.

XQ531. Would you indicate on this sketch the position of the coil on the core M-2, indicating how far out towards the end of the core it extends? A. I have not any measurement for that and I have not a very distinct recollection, but I can only indicate in a general way. Of course, it should be understood that the sketch was purely free hand and does not purport to be in dimensions, in any case, but my schematic diagram with respect to the location of the rings is all right as to scale.

XQ532. Exhibit 74 was to scale and Exhibit 80 is not to scale? A. That is correct. I have indicated by double cross hatching the approximate location of the end of the field winding and I designate the winding by the letter F.

XQ533. When there is a change in voltage in the coil C that also causes or tends to cause current to flow in the rings R-1, R-2, R-3, does it not? A. I think not. I do not know. I will answer it in this manner. I think not in any significant sense.

XQ534. Theoretically it should do so, should it not? A. I doubt if even that is true, but I am not sure. The ring nearest to the coil is purposely cut away and I doubt if the copper is subjected to any field due to the floating coil.

XQ535. If the coil were separated entirely from the magnet and were in the open air, then change in voltage in the coil C would create magnetic flux flowing through an air path, would it not? A. Yes.

XQ536. Now assuming that the coil is in its present position there would still be the tendency to create such magnetic field, would there not, by reason of change of voltage in coil C? A. Yes, to be theoretically expressed by a trifling change in the distribution of the flux. I do not think it is enough in a practical sense to define it.

XQ537. Assuming that that change is of sufficient power, then that would cause current to flow in the rings R-1, R-2, R-3, would it not? A. No, I do not think so.

XQ538. Upon what do you base your belief that the change in voltage of coil C would not cause current to flow in the rings R-1, R-2, R-3? A. The rings are so located and protected from the coil C that I am unable to see how there would be any cutting of the ring by flux produced by the excessively small currents in the coil.

XQ539. Does not that come to asserting that the energy of the fluctuations in the coil C is not great enough to cause a measurable current to flow in the rings R-1, R-2, R-3? A. I am not sure about the connection between the premise and the conclusion. I think the conclusion is correct.

XQ540. Is not the conclusion based upon the assumption that the energy of the fluctuation is not great enough to cause a measurable change? A. In comparison with the available magnetic path that might be a correct way of stating the position, in other words, the path provided for any magnetism produced is so enormous in section as compared to any fluctuating magnetism that could conceivably be created that it is a necessary assumption that there may not be any detectable intensity of field from any fluctuations in the coil, particularly since every precaution is taken to prevent such fluctuation.

Mr. Edwards: I will ask to have the sketch referred to marked for identification.

(The said sketch was marked "Plaintiff's Exhibit CC for Identification.")

CECIL E. BRIGHAM, a witness produced by plaintiffs, began his experience in radio engineering in 1917 when he joined the United States Naval Reserves where

he acquired radio instruction in full and experience in radio testing. In 1919 he became engaged in radio testing, research development at the Radio Testing Laboratory, Washington, D. C. From 1919 to 1921 his work consisted of testing all kinds of radio receivers and amplifiers. Between 1921 and 1922 he was in the Research and Development Department at the Radio Testing Laboratory. In 1922 he became associated with the Brandes Company of New York City, known as C. Brandes, Inc. of 237 Lafayette Street, New York City (now known as the Kolster Company). He was engaged with them in the direction of research and development of acoustical devices and had directed that work for four years. For the two years last past he was head of the Laboratory and all branches of radio research development, the governing acoustical devices, radio receiving devices, amplifying devices, and the then present electric sets. He is familiar with alternating current operated receiving sets of different makes.

DIRECT EXAMINATION.

Q49. How long have you known of the electrodynamic type of loud speaker? A. For about six years.

Q50. Were they on the market when you first heard of them? A. My first experience with the dynamic type of speaker was with a commercial product known as the Magnavox D.C. dynamic speaker. That speaker employed six volts, two or three amperes for the field excitation.

Q51. What success was enjoyed by that speaker at that time commercially to your knowledge? A. The principle of that commercial speaker was very good, but due to the fact that the field excitation necessary had to be obtained from a six-volt storage battery, the drain on the storage battery just for the field excitation was actually sometimes more than the drain from a radio set and consequently that speaker was not popular because it wore down or drained down the battery too rapidly and the public would not continue to have that bother and so the first dynamic speaker at that time was not popular.

Q52. Why do you say the principle was good? A. The electrical principle of a moving coil system in a strong magnetic field, which field was obtained by a separate source of field excitation.

Q53. Were there any advantages in that type of speaker over the permanent magnet type? A. Yes,

there is a great advantage for the reason that in magnetic or permanent types of speakers you are limited to the amplitude of vibration of your moving element. In a dynamic type of speaker you are not limited to the amplitude of vibration of your moving element and consequently since bass notes or low frequencies response depends upon the amplitude of the vibration of the moving element the dynamic principle is very important.

Q54. Is the dynamic type of speaker popular today? A. Very popular.

Q55. To what would you attribute its present popularity as contrasted to its unpopularity in 1922? A. Strictly in the means that it employed to obtain the field excitation for this dynamic speaker.

Q56. Will you explain that last answer a little more in detail? A. The field is excited by means of a rectified alternating current and since a rectified alternating current can be obtained readily there is no trouble or annoyance to the customer by using such means for a dynamic speaker.

Q57. Do you mean annoyance in regard to power? A. Annoyance as far as trouble in seeing that you always have the correct excitation for your field.

Q58. That removes the objections which were previously existing with battery power, is that correct? A. Absolutely.

Q59. Are you familiar with the Radio Corporation loud speaker 104? A. I am.

Q60. I hand you Defendant's Exhibit 74 and ask you if you know of the presence in the actual speaker of copper rings such as shown at the righthand portion of the top element in this exhibit? A. By looking at the drawing there is no specific mention of copper rings, but in my own experience and the investigation of the 104, I know there are copper rings existing at that unit.

Q61. Will you explain just how these rings act in the operation of the speaker? A. It has always been my belief that the copper rings serve two purposes, one is for the reduction of hum from the loud speaker device, I mean by that that there is a certain ripple voltage in your field winding and the copper rings by means of the Eddy currents introduced by the ripple voltage from the field does help to reduce the hum ripple or the voltage induced in the voice coil.

The other purpose of the copper ring is the effect that it has upon the high frequency response from the loud speaker. The copper rings being in proximity to the voice coil it changes the characteristic of the voice coil at high frequency to effect the high frequency response.

Q62. Will you explain more in detail just how those rings act to reduce fluctuations? A. The copper ring being above the field coil it has the effect of a short-circuited turn, a large short-circuited turn and any ripple that is in the field winding will induce voltage in the copper ring and Eddy currents existing, and there is 180 degrees phase relation from the Eddy current nullifying the ripple from the field coil.

Q62. Is this ring similar in its action in a short-circuited transformer secondary winding? A. It is exactly analogous to a short-circuited single turn secondary of a transformer.

Q64. Of what use is it if any to have an amplifier tube used in connection with an electrodynamic loud speaker? A. An amplifying tube must be employed with any type of speaker to get a satisfactory acoustic response.

Q65. And just why is that? A. Because the efficiency of speakers in general means that the audio-frequency rectified by the detector must be amplified to a satisfactory point such that it will get satisfactory acoustic output.

CROSS-EXAMINATION.

XQ118. What acoustical devices was the C. Brandes Company then making? A. Devices known as telephone receivers or telephone head sets.

XQ119. Were they making any loud speakers at that time? A. Not when I first joined the company.

XQ120. So that at that time your work was exclusively with telephone receivers and head sets. A. That is right.

XQ121. When did you first have any experience with loud speakers while you were with the Federal Brandes Company? A. As early as January and February of 1923.

XQ122. January or February, 1923? A. That is right.

XQ123. Prior to that time had you tested any loud speakers? A. No.

XQ124. What was the first loud speaker that you tested? A. I believe the first commercial speaker that I had any experience with was the Western Electric horn type speaker. I cannot recall the type number of that speaker. Then others followed the Western Electric type speaker.

XQ125. Is that the cone type speaker or horn type speaker? A. Horn type speaker. Then our own development of horn type speakers.

XQ126. Before you began your development had the Western Electric cone type speaker come out? A. It had not.

XQ127. And when did you begin your development at the Federal Brandes Company? A. About May or June of 1923.

XQ128. And what type of speaker did you then put on the market? A. The horn type speaker.

XQ129. Was it an electrodynamic horn type or a permanent magnet type? A. A permanent magnet type.

XQ130. And how long did that particular type which you first put out continue on the market? A. It continued during 1923, 1924 and even in the early part of 1925.

XQ131. What was the next type of loud speaker that the Federal Brandes Company put out? A. The cone type of speaker.

XQ132. And what is a cone type speaker? A. A cone type speaker is one in which the moving membrane to get out the acoustic response is made up out of some material in shape of a cone, that cone actuated by some unit device.

XQ133. And when did you put out that cone type speaker? A. I believe it was in the early part of 1925.

XQ134. At that time what was the state of the market, if you know, with respect to cone type speakers as compared with the diaphragm type of speaker which was first put out? A. Do you mean diaphragm type of speaker, the horn type of speaker?

XQ135. Yes, the horn type. A. During the time when we first put out our cone type of speaker the market was about fifty-fifty as far as cone type versus diaphragm or horn type of speaker.

XQ136. And the horn type was a diaphragm type, was it not? A. That is a matter of opinion whether you call a horn a diaphragm type of speaker or not. You could call a cone a diaphragm type of speaker.

XQ137. What was the moving part in that horn type of speaker? A. A diaphragm.

XQ138. What is the state of the market today with respect to horn type speakers having a diaphragm and cone type speakers? A. I think it is known to every one that the cone type speaker holds the majority of the market.

XQ139. Very much the majority? A. Very much.

XQ140. When did you first become familiar with the Magnavox loud speaker? A. Sometime in 1923.

XQ141. What kind of a speaker was that at the time you became familiar with it with respect to cone or diaphragm? A. It was a diaphragm or horn type of speaker.

XQ142. Had you ever had any experience with the Magnavox Loudspeaker before that time? A. No.

XQ143. And how long did you continue to have experience with the Magnavox loudspeaker after that time? A. The Magnavox loudspeaker was purchased just to obtain information of that type of speaker and the experience gained immediately after the purchase of the speaker was sufficient to realize the limitations of that speaker.

XQ144. What were the limitations of that speaker that you mention? A. The method employed in the field excitation of the speaker.

XQ145. Now, did not the Magnavox Company also make a type of Magnavox speaker in which the field coil was excited by direct current from a generator? A. When you say a generator, do you mean a D.C. generator?

XQ146. Yes. A. Yes. I believe they did put out a dynamic type of unit which could be used on 110 volt D.C. supply source.

XQ147. It was well known prior to that time, was it not, how they rectify alternating current so as to produce direct current? A. Yes, it was.

XQ148. Would there have been any difficulty in providing a rectifying outfit for rectifying alternating current for the field of the Magnavox loudspeaker? A. I would have to answer that, knowing the art as I do today, that the tubes at that time were not power rectifying tubes, as we used 3-element tube as a rectifier, and in those days you could get rectification, but could not get

sufficient power rectification to give you satisfactory field excitation for a dynamic speaker.

XQ149. That is, the trouble was with the absence of suitable rectifying tubes? A. That is right.

XQ150. If the rectifying tubes had been available, there would have been no trouble, would there; in applying rectified and filtered alternating current to the field coil of the Magnavox loudspeaker?

Mr. Neal: That I object to. It is not limited as to whether it is present knowledge or what is known up to that time, and it seems to me rather indefinite.

The Court: Present knowledge.

Mr. Barus: It is the same knowledge from which he spoke from in his direct examination, whatever it was, as to that very subject.

The Court: I think you may answer.

A. There was not.

XQ151. With the Federal Brandes Company putting out its first type of cone loudspeaker, was it an electro-dynamic loudspeaker or a permanent magnet loudspeaker? A. It was a permanent magnet loudspeaker.

XQ152. And why was that? A. The reason for the permanent magnet loudspeaker was that it was a more efficient speaker at that time to be used with the circuits that were designed commercially.

XQ153. And it was cheaper, was it not? A. Very much cheaper.

XQ154. When did the Federal Brandes Company put out an electro-dynamic type of loudspeaker, if at all? A. During the latter part of 1926 or the first part of 1927.

XQ155. Was that a cone type speaker or a horn diaphragm type of speaker? A. A cone type speaker.

XQ156. Referring to this Plaintiffs' Exhibit No. 48, I notice that in the back of the cabinet, there is a device bearing the label "Brandes table talker". What is the Brandes table talker? A. The Brandes table talker was the first diaphragm or horn type of speaker which the Brandes Company put out in the latter part of 1923.

XQ157. And at what date was that put out? A. In the latter part of 1923.

XQ158. Was it the electro-dynamic type of the permanent magnet type? A. A permanent magnet type.

RDQ336. When did you first see an alternating current operated electrodynamic loud speaker? A. I heard about it before I actually saw one. Your question is a rectified energy of a field coil on a dynamic speaker?

RDQ337. When you first saw a loud speaker having alternating current power applied in that way? A. I was answering as far as actually seeing the device, the RCA 104 was the first device of that kind that I had seen, but I knew of such a device from the second Lowell and Dunmore patent.

Mr. Barus: I object to that.

Mr. Neal: I do not care whether that goes in or out. I would just as soon have the last part stricken out.

The Court: Then it is stricken out.

ALEXANDER NYMAN, called by the plaintiffs. Resided at Hartsdale, New York, and was Manager of Radio Patents Corporation. His first experience in the radio art was during his college work during 1914-1916 at Manchester College of Technology, Manchester, England, where he investigated the possibility of submarine signalling. In 1917 he was employed by the Westinghouse Company of East Pittsburgh, Pennsylvania, and was assigned to development work on generators for application to radio to aircraft for the Air Service of the United States. Later, in the same year, he joined the Air Service Radio Section and went through complete training as a radio officer. After the War he was again employed by the Westinghouse Company as assistant to a consulting engineer of that company, a Mr. Conrad, who was at that time engaged to a large extent in the development of radio apparatus. He assisted Mr. Conrad in putting up the appliances in the KDKA station and, subsequently, in 1920 was assigned the work. In 1921-1922 he was at work on the development of loud speakers which were later manufactured by the Westinghouse Company. In 1923 he left the Westinghouse Company and was employed by the Dubilier Condenser Corporation, in charge of the engineering department which conducted research work on condensers used in the radio art and their application to radio receiving and transmitting circuits. In 1926 he left the Dubilier Company and was employed by the Radio Patents Corporation do-

ing consulting work for the Dubilier Condenser Corporation and, as Manager of the Radio Patents Corporation, handled the interchange of technical information and inventions, particularly in the radio art between the Dubilier Company and associated foreign companies.

DIRECT EXAMINATION.

Q36. Will you turn to the Lowell and Dunmore patent No. 1,606,212. Some criticism was made as to the effectiveness of the mid point connection 11 in the elimination of the hum in the output circuit. Will you state whether or not there is an ineffectiveness in this respect? A. This potentiometer 11 appears to be connected in the right point and I do not see any reason why it should not be effective.

Q37. To what extent would the fact that the rectifier supplying the current to the tubes which supply the output is a half wave rectifier interfere with the functioning of that portion of the apparatus? A. The choice between a half wave rectifier and a full wave rectifier is merely a matter of degree. A half wave rectifier can supply the current in the same manner as a full wave rectifier. If I understand the criticism correctly it is referring to the fact that half wave rectifier is operative only during one half of the cycle, while the other half presumably no current is passing.

That is only true to a certain extent, since, in the first place, the inductive effects in the smoothing circuit will tend to extend the period of operation of the rectifier and on the other hand the inertia of the magnetic field particularly in solid structure would tend to maintain the magnetic field which is used for the purpose of operation.

Q38. How would the values of the condenser 16, coil 17, function in this respect? A. Condenser 16 and the coil 17, which is the usual type of filter in combination with rectifier should be entirely effective to maintain a constant flow of current provided their magnitudes are chosen of the proper value.

Q39. And was it within the skill of the art at that time to properly select those values? A. This whole subject was very thoroughly discussed in literature antedating this patent by a good many years.

Q40. And in your opinion would it have been a matter of ordinary skill to have adjusted those values to get the desired constant potential? A. That was entirely within the skill of an engineer.

Mr. Barus: It seems to me that that is asking the conclusion of the witness as to what is the ordinary skill of an engineer. I have no particular objection to this particular question.

Mr. Edwards: It is opinion evidence.

The Court: I think the answer to the preceding question and this are intended to be identical anyhow.

Mr. Barus: Yes.

By Mr. Edwards:

Q41. Refer to the circuit in the same patent for supplying the power to the field of the loud speaker. Some criticism was made as to the obtaining suitable rectified current and the effect of the field magnetism upon the coil 9. Will you state how those parts of the system operate in that respect? A. Rectified alternating current which is supplied to the field magnet 10 is intended to produce a constant magnetic field. On account of the rectifier there is a possibility of fluctuations in that magnetic field. Such fluctuations would be detrimental to the operation of the loud speaker and must be taken care of some way or other. In this patent the coil 9, which is the operating coil, is described to carry a current which counteracts the effects of this variable field in such a way as to balance out this effect and give the correct operation of the loud speaker.

Q42. Now, will you go into that a little further and consider first the function or operation of coil 10 itself with respect to smoothing out fluctuations of the power circuit from the rectifier; how does that function? A. Coil 10 is an inductance and the inductance in any circuit tends to maintain the current constant. Moreover, in the usual types of loud speakers of this type, electrodynamic loud speakers, this coil 10 consists of a solid iron structure. A solid iron structure has the property of maintaining its magnetism in face of variations of exciting current on account of so-called eddy currents generated in the solid core. This would maintain the field constant.

Q43. Now, would the coil 10 itself be completely effective in making the current constant or would there be any residual fluctuation left over after the coil 10 itself has operated? A. There would be a certain residual fluctuation left over.

Q44. How does the flux of coil 9 operate with respect to that residual flux? A. May I express it in my own terms?

Q45. Yes, if you will. I would refer to it not as the flux of current 9, but as the current flowing through coil 9.

Q46. Yes. A. This current is arranged to carry a certain amount of fluctuation of the same frequency as the fluctuations of the field strength in the magnet 10. Also the circuit provides arrangement for adjusting the magnitude of these fluctuations; and the patent mentions the fact that the connections have to be arranged in such a relation that this current passes in the correct phase. Then the object of these currents is to react with the field in such a way that the pulsations of the field are ineffective. This is accomplished——

Q47. Ineffective in what region? A. Ineffective in producing any audible sound.

Q48. Is there any advantage or point in having this connection occur at the place where it does occur? A. There is a very decided advantage in applying the method of compensation at the point where it is most desirable to eliminate it. This coil is producing sound waves, and if there were any fluctuations left at this point, they would produce disturbing noises, and therefore at this point we are to eliminate. There may be added also that if it were attempted to eliminate those fluctuations at another spot, additional apparatus would be required.

Q49. Now, while we are on this subject, will you consider the Defendant's Exhibit 74, illustrating the loudspeaker 104 and the detailed sketch made by Mr. Waterman to illustrate the approximate position of the copper rings R1, R2 and R3, and compare that action with the action in the Dunmore and Lowell patent, to which you have just referred? A. The copper rings R1, R2 and R3——

Mr. Barus: I am wondering whether this is proper rebuttal testimony. Nothing was said about these rings or their having any function in this connection on the direct examination on the prima facie case, and now apparently they are introducing some theory about those rings being an infringement. I am wondering whether that is proper rebuttal.

Mr. Edwards: The defendant itself brought in these copper rings as an attempt to differentiate from the action of the patent. Mr. Waterman pointed out that according to his view the patent fields were opposite to each other, whereas, we claim that in the loud speaker 104 by reason of the copper rings, you get quite a different action. I think it is entirely proper for us to point on rebuttal that Mr. Waterman's view is incorrect.

Mr. Barus: I think some other theory of infringement than that advanced in the prima facie case ought not to be taken up at this time.

Mr. Edwards: This is no different theory from what was put in originally. The defendant came in and asserted the difference in this respect.

The Court: As I understand it, Mr. Barus, this is merely meeting directly the theory of the defendant's expert who tried to escape the conclusions advanced by the plaintiff. Am I wrong?

Mr. Barus: I think you are wrong there, because we were unable to find any conclusions in that respect advanced by the plaintiffs' expert which he could meet.

Mr. Edwards: Failing to find such, Mr. Waterman asserted some of his own and I think we are entitled to answer them.

Mr. Barus: I think that is correct, and I have no objection to talking about Mr. Waterman' conclusion; but it seems to me at this time to introduce perhaps some new theory of infringement that we have not had an opportunity to meet.

The Court: So far as advancing any new theory of infringement, that can not be done at this time, but I think they can meet it if the fact warranted or the theories warranted the theory advanced by your expert, and that is what I understand this is.

Mr. Barus: I have no objection to that, but I want to guard against introducing some new theory at this time unless we have an opportunity to meet it too.

Mr. Edwards: We have no new theory of infringement.

A. The copper rings R1, R2 and R3 are located in the immediate vicinity of the operating coil C, which corresponds to coil 9 of the patent. As I understand the operation of these rings, they are intended to have currents flow in them which counteract the variations, the pulsations, in the field magnet, in such a way that the operating coil C should not be subject to their influence, and therefore the output of the loud speaker would not contain the disturbing noise. The function of these rings R1, R2 and R3 in carrying currents which counteract the variations in the field, appears to me to be similar to the function of the coil 9 in the patent which also carries currents which counteract the fluctuations of the magnetism in the field structure.

Q50. Now, in that structure, the field coil operates to some extent to remove or smooth out the fluctuations from the rectifier? A. I find in the diagram, Defendant's Exhibit No. 74, that the field magnet is connected to the output of the rectifier, consisting of the two UX-216 B tubes with a condenser shunted ahead of this coil. It carries practically the full current output of this rectifier. Since this coil is an inductance, it will have to that extent the same effect as the inductance of coil 10 of the patent, which is the identical coil, so far as the loud speaker is concerned.

Q51. There will be some residual fluctuations notwithstanding the field coil in the loud speaker 104? A. There will be a certain amount of residual fluctuations in the current and therefore in the field structure of the loud speaker 104. That is exactly the object of those rings R1, R2 and R3, to overcome those fluctuations. Otherwise, there would be no object in putting them in.

Q52. And what in your opinion is the point or advantage of locating them at the place where they are located? A. Locating these rings next as close as possible to the operating coil C, is of very convenient and evident advantage in eliminating the pulsations of the magnetic force at the point where it is effective.

CROSS-EXAMINATION.

XQ151. What tests have you made in connection with alternating current loud speakers? A. My work on the loud speakers was mostly prior to the time when alternating currents were applied to it. In other words, it was mostly during my employment with the Westinghouse Company. The Dubilier Condenser Corporation,

of course, is not manufacturing loud speakers and therefore I had very little occasion to make tests on the loud speakers.

XQ152. Have you ever made any tests on the 104 loud speaker? A. I have listened only to the 104 loud speaker.

XQ153. That is in normal condition or some other condition? A. Under normal conditions, yes.

XQ154. So that all your testimony as to the 104 loud speaker is based on purely theoretical grounds? A. No I would not say that because during my employment with the Westinghouse Company, I had opportunity to test out and experiment very carefully with the operation of the loud speakers, I made a very thorough study of all the different types of loud speakers, and I can say that I am perfectly familiar with all the theoretical and practical consequences of the factors involved in the design of a loud speaker.

XQ155. But those loud speakers were not designed for alternating current operation, I understood you to say? A. At that time we were not considering alternating current loud speakers to any large extent.

XQ156. So that in so far as you are talking about the alternating current features you are speaking from theoretical considerations? A. Again I must say that that is not so because the factors involved in introducing alternating current in loud speakers are of the same nature and based on the same principles as the factors which enter into any kind of loud speakers. Fundamentally the loud speaker converts alternating current into sound and therefore you cannot separate really the problems of loud speakers from the problem of alternating current.

XQ157. And by alternating currents in that connection you are speaking of the audible frequency currents? A. All audible frequency currents, yes.

XQ158. I understood you in discussing the 104 loud speaker to state that the field coil of the magnet carried the full output of the rectifier. I assume you meant by that the full D.C. output, did you not? A. Yes, because part of the A.C. output in shunted by the condenser ahead of the loud speaker.

XQ159. And that is a very large part of it, is it not? A. That depends on the size of the condenser.

XQ160. And if the condenser is a 7 microfarad condenser it is a large condenser, is it not? A. It is a large condenser in the circuit and it would by-pass a considerable portion of the current.

XQ161. The greater part of the fluctuations? A. May I ask what the other condenser following the loud speaker what magnitude that is?

XQ162. Assuming it is the same? A. If you assume that the other condenser is of the same capacity than I would say that the major portion of alternating current would be by-passed by that condenser.

XQ163. Which condenser? A. The first condenser.

XQ164. So that in loud speaker model 104 by the time the current reaches the field coil, the fluctuations due to alternating current, have been greatly reduced, have they not? A. That is right.

(End of Stipulated Testimony.)

PLAINTIFFS' REBUTTAL.

Thereupon DR. FREDERICK W. LEE, recalled in rebuttal, testified as follows:

DIRECT EXAMINATION.

By Mr. Edwards:

The Witness: As to whether the Pridham and Jensen patent 1,105,924 shows a loud speaker operated by alternating current in which the current in the field coil is oppositively wound and in opposite phase to the armature coil or coil receiving the output from the radio set, I will say that in this patent I do not see any connection to any alternating current system nor do I see any method of making a connection with the armature circuit from an alternating current piece of apparatus or vacuum tube, nor do I see a method or indication of a method of reversal between the field circuit and the armature circuit I understand from the reading of the patent that in this circuit opposition occurs between two field coils and not between an armature coil and a field coil. The pulsating effects are so adjusted by the two field coils that the two armatures are acted upon by the two separate field coils. In these two separate field coils the pulsation may counteract or balance each other out, but there is no reaction between a pulsating current in the armature coil or a pulsating current in the field coil.

Reference has been made to a Hull filter and it is claimed that in the defendants' set there is a Hull filter interposed between the rectifier and the loud speaker coils which Hull filter eliminates all the hum, as to whether that is a possibility, I will say that the Hull filter consists of a condenser, an inductance coil and another condenser on the other side of that inductance coil. The Hull filter will not eliminate all the hum unless you have a large amount of energy available and a very, very large condenser on both sides, and also a very, very large inductance between the two. In other words, if you skimp on the size of condenser and skimp on the size of tubes supplying the service, or skimp on the size of the inductance it will not eliminate the hum. There is no objection from the standpoint of science to providing sufficient source and sufficient number or size of coils and condensers to smooth the current out so that there will be substantially no hum left; but there is a large objection from the standpoint of cost. Putting in large condensers, large choke coils, large tubes, enhance the cost of the set. While is is a possibility for the Hull filter to be made with sufficient number or size of elements to smooth out, the objection to it, to my mind, is the cost of it. The practice in commercial sets is to make everything as cheaply as possible without destroying the operation of the set. When that is done that leaves a substantial fluctuation in the current leaving that Hull filter. There usually is a substantial hum left which can be tested for by placing a telephone or amplifying apparatus at the end of the filter. With an expensive filter I can reduce the intensity of the hum to any desired amount, even beyond audibility. But if the filter is not an expensive filter then there is more or less residual hum.

Mr. Darby: I have no cross-examination.

The Court: I would like to ask you how it is—maybe you have already explained it—how you account for the fact that this model or this set that is claimed to have been brought out of commercial use,—and there is no testimony to the contrary, and it functions apparently all right here in this room,—how do you explain that that model, when listening to it has no more hum when you have the connection in one form than when you have it in the other? A. From the description as presented in the testimony that I have heard I would say that there was no

hum at the end of that filter circuit, but I do not know that as such unless I have tested it.

Q. Well, it is conceded, isn't it, that there is a difference in the plan of getting rid of the noise in this set and the set on which the plaintiff relies? A. I understand that both sets are identical but I have no——

Q. I am talking about the plaintiff's set. A. I beg your Honor's pardon.

Mr. Edwards: The one in the corner.

The Court: You do not depend upon the filter in that? A. No, sir, they depend upon compensation.

Q. Do they have the same filter device? A. They have the same type but not the same constants in their filter. In other words, they can skimp on the filter more than they could if it was necessary to have a one hundred per cent filter.

Q. Well, if the plaintiff concedes they do not rely upon the filter in their own device, and if it appears to be a fact, when you listen to what we call the second exhibit or model of the defendant's device, that there is not any appreciable difference in the hum when the connection is in one form than when it is in the other, doesn't it follow that the filter plays a substantial part in one machine and not in the other? A. Yes, but in the construction of a filter and coils there is often a great deal of difference between them although they apparently are made nearly alike. You may have considerably more inductance, or you may have a considerable difference in the constants, in the normal manufacture, and in one case you may not have any hum at all and in another product made more or less identical you may have a considerable amount of hum.

(Testimony of the witness concluded).

Mr. Brady: We are ready over here whenever your Honor is.

The Court: What do you want done now?

Mr. Brady: I want to show the quantity of hum in the Stewart Warner set.

The Court: Do you want it read into the record?

Mr. Brady: I want to put the test machine on the Stewart Warner set and have it observed and have the stenographer record what happens.

The Court: Is it something that can be listened to in a different way from the way I listened to the other?

Mr. Brady: Yes, you can hear it from your chair.

The Court: Very well. Which one is this?

Mr. Brady: This is the defendant's machine.

The Court: They have two machines.

Mr. Brady: The defendant brought in but one No. 109.

The Court: It is identical with the one that you have been using, I understand, the same model?

Mr. Edwards: They say so. We do not know.

By Mr. Brady:

Q. What is that we hear? Will you explain just what the operation is by referring to a circuit diagram?

PERCIVAL D. LOWELL recalled.

DIRECT EXAMINATION.

Mr. Lowell: We have now the loud-speaking test apparatus across the output of the filter. The leads to the test apparatus are connected across the output of the filter circuit of the Stewart Warner receiver. Apparently the change of noise is due to putting it across the filter. In other words, there is a residual hum here when we connect one side to the receiver, or when we connect the full input of the defendants' apparatus on it changes into a hum of a slightly different pitch, and that is the hum which you hear from the filter. The hum you hear now is with the defendant's apparatus not connected across the filter. When we connect it across the filter you will notice there is a smoother hum which comes in.

The Court: When you say "across the filter", do you mean after the filter has done its work? A. Yes, that is correct.

Mr. Brady: The circuit diagram referred to by the witness is offered in evidence as Plaintiffs' Exhibit 109. (Received and marked "Plaintiffs' Exhibit 109").

The Witness: The circuit diagram I have identified is a fair representation of the test I have conducted.

CROSS-EXAMINATION OF MR. LOWELL.

By Mr. Darby:

Q. Would you say that there is more hum in this loud speaker when it is not connected across the output than when it is connected across the output, and I now have it so that it is not connected across the filter at all and I ask you to listen to it. Now, I will connect it. Now, which do you say is the loudest? A. I say there is more 120-cycle hum when connected across the filter than it is without.

The Witness. This apparatus, test apparatus, consists of a loud speaker and three stages of vacuum tube amplification. There are six tubes in that test set. There are three stages of amplification and as nearly as I can tell there are two full wave rectifiers. I have not examined this diagram before. There are four amplifying tubes, three amplifying stages, in this set, and after amplifying that hum during all of these stages of amplification, you get this hum that we hear.

Mr. Darby: This is an A. C. amplifier.

Mr. Edwards: In rebuttal, your Honor, I would like to have this test run with a battery device. Apparently Mr. Darby is objecting——

Mr. Darby: No, sir. I am not objecting.

The Court: I will have to test it, after all, mostly by my own ear.

Mr. Edwards: Mr. Darby has criticized this because the amplifier is an A. C. amplifier and has some hum itself, and if we connect up batteries that is out.

The Court: But it is really the human ear that we are concerned with.

Mr. Edwards: Not quite, your Honor, because it is whose human ear which is to be satisfied and whether you are satisfied under conditions of noise or in a quiet room.

The Court: Relatively speaking, doesn't this testing machine bear out what the human ear hears, namely that most of the noise, or a major part of it, is eliminated before you get to the loud speaker?

Mr. Edwards: No, I think that is where we differ. We insist that that test that we have just made shows that after you leave the filter and before you get to the loud speaker there is a very substantial hum. Mr. Darby criticizes that tests because he said the loud speaker itself is putting in some of the hum because it is an A. C. speaker. We offer to meet that by running it with batteries instead of A. C., so that there will be no hum in the amplifier itself. That is our offer.

The Court: I do not think it is necessary.

Mr. Darby: I agree with your Honor. I made no criticism whatever. I wanted the record to show what the facts were. We rest our case.

(Evidence concluded).

At this point the Court ruled orally that the patent 1,606,212 is valid and infringed. The views expressed by the Court in so ruling are embodied in the final opinion of the Court on file in this case.

The aforegoing Statement of Narrative Evidence is hereby approved.

SEMMES, BOWEN AND SEMMES,
By GAYLORD LEE CLARK,
Solicitors for Plaintiff.

C. V. EDWARDS,
Of Counsel.

COOK & MARKELL,
CHAS. MARKELL,
Solicitors for Defendant.

SAMUEL E. DARBY, JR.,
Of Counsel.

Approved this 12th day of December, 1934.

WILLIAM C. COLEMAN,
U. S. District Judge.

PROFFER OF EVIDENCE UNDER RULE 46.

(Style of Court and Title Omitted.)

Plaintiffs offer to prove the following by the following named witnesses:

HARRY R. VAN DEVENTER, that he resides in the City of New York; that in October, 1924, he was Vice-President of the plaintiff Dubilier Condenser Corporation and negotiated the agreement identified as Plaintiffs' Exhibit No. 4, now on pages 25 to 40, inclusive, of the Record on Appeal in the case of Radio Corporation of America vs. Dubilier Condenser Corporation, hereinafter referred to as Radio Corporation Appeal Book; that at the time of negotiating said instrument plaintiff examined and heard in operation the receiving set marked Plaintiffs' Exhibit No. 48, and that the photograph, Plaintiffs' Exhibit No. 47 is a copy of said instrument; that at that time there was no alternating current operated radio receiving instruments on the market; that the Dubilier Condenser Company, after negotiating and executing said agreement, designed and caused to be marketed a B-battery eliminator, described and shown in the Catalogue marked "Plaintiffs' Exhibit No. 7"; that the circuit of said eliminator is shown in the blueprint marked "Plaintiffs' Exhibit No. 7-A"; that one of the said super-ducons is produced as a physical exhibit and marked "Plaintiffs' Exhibit No. 7-B"; that the reason the plaintiff manufactured only a B eliminator and not an eliminator for A and C batteries was that at the time the only receiving sets on the market were crystal receivers, which did not employ vacuum tubes, regenerative receivers in which the plate circuit fed back to the grid circuit, and in consequence no A battery eliminator or C battery eliminator would be effective to avoid the hum of the power current; and a type known as Neutrodyne receivers, which were subject to oscillation under very critical conditions, and to which neither A battery eliminators nor C battery eliminators could be applied without making extensive changes in the sets. Therefore, as a commercial proposition the Dubiliar Company was confronted with the necessity of making radio receivers complete, which it did not have the capital to do, and which would compete with its condenser

customers, or, on the other hand, making only a B eliminator which could be used with most of the receiving sets of the old type then on the market, leaving new sets to be manufactured by radio set manufacturers, embodying both A and B and C eliminators. The Dubilier Company spent upwards of $300,000 developing these "Superducons" (Battery eliminators) which were put upon the market in the year 1924, and continued for several years thereafter. Difficulties were encountered in obtaining tubes and in the meantime, in the latter part of 1926 or 1927, the Radio Corporation came upon the market with complete receivers, which were sold in such large numbers as to reduce the possibilities of the eliminator as a separate unit. The majority of radio sets on the market previous to that were of the regenerative type. The exhibit marked "Plaintiffs' Exhibit 8" is a type R. A. tuner and type D. A. audio amplifier, comprising one of these sets as put out by the Radio Corporation, which were manufactured and sold by the Westinghouse Electric Manufacturing Company, which made the set. The loud speaker, marked "Plaintiffs' Exhibit 9" accompanied this set. This set was operated entirely by batteries, a storage battery for the filament supply and large dry-cell batteries for the plate supply.

FRANCIS W. DUNMORE, I am a physicist of the Bureau of Standards in Washington, D. C., where I have been employed since 1918, at which time I met P. D. Lowell, the co-inventor of Letters Patent 1,455,141 and 1,606,212; I became interested with my co-inventor Lowell in the invention relating to the patents and my patent 1,635,117 during the summer of 1921, at which time I determined with his co-inventor Lowell the desirability of eliminating batteries in radio receiving apparatus for broadcast recepton in the home using the ordinary 60-cycle house residence lighting power; that the matter comprising Defendants' Exhibit No. 1, and shown on pages 459 to 485 of Volume 4 of the said Radio Corporation Appeals Record, are correct copies of time cards made by me on the dates specified on the said entries, and now produces the originals of said entries; that the matter between pages 487 and 517 are correct copies of monthly reports made by me on the dates shown thereon; the entries appearing on pages 519 to 538 forming part of said Exhibit 1, are correct copies of notebook entries made by me on the dates appearing thereon. I

produce the original time cards, notebook entries, monthly reports and laboratory reports corresponding to the copy appearing in this record, and offer the same as Plaintiff's Exhibit No. 14 in this case.

Mr. Percival Lowell and I conceived the invention of Letters Patent 1,455,141 on September 28, 1921. There is an entry on my time card for September 28, 1921, page 463 of the Radio Appeal Record. We made a bread board model, which later was put into the set illustrated in the photograph, which I offer as Plaintiffs' Exhibit 15. The circuit of this apparatus is shown in my notebook entry of October 7, 1921, on page 41 of the notebook, forming part of Plaintiffs' Exhibit 14. After having supplied the raw alternating current to the filaments of the tubes, as illustrated in my notebook entry on page 41, Lowell and I proceeded to eliminate the B battery, and for that purpose we constructed a filter, employing a seven henry choke, a ten microfarad condenser, a 32,000 ohm resistor and two receiving tubes acting as a full wave rectifier, 60-cycle alternating current was supplied to derive rectified current, which was filtered and supplied to the plate circuit of electron tube receiving apparatus, as illustrated in my notebook on page 46, under date of December 8, 1921, page 524 of the Radio Appeal Record. (Exhibit 14.)

By November 23, 1921, the type A relay (Plaintiffs' Exhibit 15) was operated on a Teletype radio printer receiver, by which signals were received in print successfully at the Bureau of Standards from the Naval Air Station at Anacostia, Washington, D. C., in the presence of naval officials, and as described in the article in Radio News for November, 1922, Plaintiffs' Exhibit 59, Radio Appeal Record, pages 219-222.

The completed drawing of the A type relay is offered in evidence as Exhibit 16, shown on page 805 of the Radio Appeal Record.

After Lowell and I had operated the B battery eliminator system shown in my notebook, page 46, on December 8, 1921, we proceeded to assemble a complete radio receiver operating entirely without batteries, which we operated without A and B batteries December 10, 1921, in the presence of John P. Buckley, R. S. Ould, Francis H. Engel, H. A. Snow, Francis M. Baer and others.

This radio receiving apparatus successfully operated to receive phonograph concerts transmitted by the Naval Radio Station at Anacostia, D. C., using 60-cycle alternating current to energize the filament and plate circuits without interference from hum from the alternating current.

Having operated the alternating current power supplied receiving apparatus on December 10, 1921, Lowell and I continued to experiment with the apparatus and proceeded with the construction of a compact form of apparatus embodying our circuit of December 10, 1921. We were actively engaged in building the apparatus during the months of January, February and part of March, 1922. The apparatus was completed prior to March 10, 1922, as shown in photograph Plaintiffs' Exhibit 17. Lowell and I successfully operated this apparatus and gave many demonstrations of the apparatus. The circuit diagram for this apparatus is illustrated in Exhibit 18, and shows the three stages of radio frequency amplification, the detector and the two stages of audio frequency amplification employed in the Bureau of Standards set. In our December 10, 1921, apparatus we employed an electron tube detector; and we provided hum eliminating means for each of the sections of the radio receiving apparatus.

The Bureau of Standards receiving set illustrated by Exhibit 17, as shown in the circuit diagram Exhibit 18, is here, and I produce the same and state that this apparatus is in the same condition as it was when originally constructed and completed the early part of March, 1922. This receiving set and the associated rectifier unit are marked in evidence as Exhibits 19 and 20, respectively.

Here is the antenna which Lowell and I used in demonstrating the apparatus, Exhibits 19 and 20. This is a flexible canvas rolled type of antenna, where the wires are sewed in the canvas. My wife sewed this antenna, so that we could make tests of the apparatus in many different localities, with the antenna in portable form. We did a great deal of work on the alternating current radio receiving apparatus away from the Bureau of Standards, and the photograph Exhibit 29, which I offer in evidence, shows part of my home laboratory equipment which we used in some of our developments.

The receiving apparatus received wide publicity; and I refer to publications describing this apparatus which appeared in the Journal of the American Institute of Electrical Engineers for July, 1922, pages 488, 489, 490; the article in Radio for September, 1922, page 27; the article in Telephony for September 16, 1922; the article in Q. S. T. for October, 1922; the article in Radio News for September, 1922, page 441; and the newspaper publications in the New York Times for April 25, 1922, Washington Star for April 24, 1922, New York Globe for April 25, 1925, Washington Herald for April 14, 1922, and Washington Post for April 25, 1922, which articles I have grouped and offer in evidence as Exhibit 21.

On December 3, 1921, I had conceived the invention of Patent 1,635,117, as shown by the entry on my time card for December 3, 1921, page 467 of the Radio Record.

By December 16, 1921, I worked out the complete circuit ~~in~~ the Patent 1,635,117, and successfully operated the circuit, as shown on page 51 of my notebook, Radio Appeal Record 526. After working out the circuit on December 16, 1921, I proceeded with the construction of the apparatus of the invention of patent 1,635,117, which apparatus is shown in the photograph which I offer as Exhibit 22. The actual apparatus as set forth in the photograph Exhibit 22 is here, and I now refer to the same, and offer this as Exhibit 23. This apparatus successfully operated early in 1922, and eliminated A, B and C batteries. The apparatus embodied the element of the resistor shunted by a condenser and connected in the circuit between the grid and cathode for impressing a negative potential upon the grid. The invention of Letters Patent 1,635,117 was widely described in publications; and I refer to the article in the American Institute of Electrical Engineers describing this apparatus, which appears on pages 199-203, Radio Appeal Record; Radio for March, 1924, page 807 of the Radio Appeal Record; Radio News for July, 1922, pages 814-817, which are offered as part of Exhibit 53. I refer to the article in the Journal of American Institute of Electrical Engineers, published April, 1922, pages 242-246, which article I offer as Exhibit 53.

After completing and successfully operating the Bureau of Standards set, Exhibits 19 and 20, I collaborated

with Lowell in his work at the Radio Instrument Company in Washington, D. C., where he constructed a radio receiving apparatus operating from the alternating current, which apparatus I now offer in evidence as Exhibits 24 and 25. Exhibit 24 comprises a J. M. 6 amplifier, employing three radio frequency amplifier stages and electron tube detector and two audio frequency amplifier stages powered with alternating current from the rectifier unit Exhibit 25, supplying raw alternating current to the filaments and rectified on the current to the plates.

Lowell and I were under contract to develop alternating current radio receivers with the Radio Instrument Company for a year, which terminated in June of 1924. During the summer of 1923, and shortly after the issue of our patent 1,455,141 on May 15, 1923, we constructed the apparatus, which I now offer in evidence as Exhibit 26. The apparatus is in the same condition as it was when completed in December, 1923, except for the fact that I have substituted a filter choke for a burned-out choke, and I have substituted a fresh rectifier tube for a deteriorated tube. It will be noted that this set comprises three stages of radio frequency amplification and electron tube detector and two stages of audio frequency amplification. The radio frequency amplifier stages and the stage between the last radio frequency amplifier stage and the electron tube detector are coupled through means which strain out any hum frequencies and prevent the transfer thereof through the receiving set. The circuit diagram for this apparatus is shown at page 187, Plaintiffs' Exhibit 50, Radio Appeal Record.

I now operate this apparatus and demonstrate the fact that the apparatus functions without A or B batteries, with the tubes powered from 60-cycle alternating current, and without hum. In order to show that the alternating current is energizing the circuit of the apparatus I now make mal adjustments of certain of the hum eliminating devices, and it will be observed that the hum so shrouds the signal as to impair the condition of the modulation of the received broadcast signal, as to make the reception impracticable. However, by correcting the adjustment of the hum eliminators it will be seen that the set now operates quietly and without hum for the reproduction of broadcast programs. I demonstrated this apparatus,

Exhibit 26, to Dubilier Condenser and Radio Corporation, including Mr. H. R. VanDeventer. In the early spring of 1924 I demonstrated the apparatus to Mr. Powell Crosley, Jr., and Mr. George Lewis of the Crosley Radio Corporation, Cincinnati, Ohio. The apparatus functioned satisfactorily, but Mr. Crosley prophesied that in the light of the battery operated receivers which he was then manufacturing, that any radio receiver operating from alternating current would be so complicated as not to be possible in quantity production. At the time of building the apparatus of Exhibit 26, Lowell and I found no parts such as power transformers or rectifier tubes capable of performing the function of alternating current operation of a radio receiver, and it was necessary for us to design the power transformer, and have the American Transformer Company of Newark, New Jersey, build the transformer from our specifications. We asked the General Electric Company and Westinghouse Electric Manufacturing Company for rectifier tubes to use in the rectifier system of the receiver of Exhibit 26, and we were told that there were no such tubes available. We therefore had to resort to receiver tubes and tied the grid and plate together to secure in effect a two-electrode tube to function as a rectifier power supply system.

We called the attention of the Freed-Eisemann Radio Corporation to our said Exhibit 26, and they requested us to apply the principles of operation of our alternating current operator receiver to the standard Freed-Eisemann neutrodyne. For this purpose Joseph D. R. Freed sent to us a standardized neutrodyne in April, 1924. We proceeded to the preparation of specifications for a new power transformer, and had this manufactured by the American Transformer Company of Newark, New Jersey. We rewired the Freed-Eisemann Neutrodyne and built a power supply circuit, which apparatus is now here, and I offer in evidence Freed-Eisemann Neutrodyne rewired for operation on alternating current as completed by Lowell and me in June, 1924, as Exhibit 27. The rectifier unit for the Freed-Eisemann Neutrodyne is offered in evidence as Exhibit 28. When we had completed this neutrodyne rewired for operation on alternating current, Joseph D. R. Freed came to Washington, and we demonstrated the apparatus to him. The demonstration was completely successful, for the neutrodyne

operated on alternating current without hum. The photograph on page 181, Radio Appeal Record, Exhibit 49, shows the neutrodyne apparatus of Exhibit 27 and the rectifier unit of Exhibit 28, which we successfully demonstrated to Joseph D. R. Freed in June, 1924. We sent this rewired neutrodyne, Exhibits 27 and 28, to Freed-Eisemann Radio Corporation, but we were informed that due to the patent situation they were not immediately interested in proceeding with the production of the apparatus, due to possible infringement of patents held by the General Electric Company, and under which Freed-Eisemann Radio Corporation was not at that time licensed. We withdrew the apparatus from Freed-Eisemann Radio Corporation and demonstrated this to others, as a result of which licenses were extended to Dubilier Condenser Radio Corporation, the Argus Radio Corporation, Timmons Radio Products Corporation, Brandes Products Corporation, Philadelphia, Storage Battery Company, Grigsby Grunow Company, Elkon Works, Inc., Fansteel Products Corporation, Willard Storage Battery Company, which companies manufactured B battery substitutes and built radio receiving apparatus in accordance with our patents under license.

FREDERICK W. LEE will testify as follows:

I graduated in 1911 from Cornell University, where I specialized in Electrical Engineering. After hat, I entered Harvard University as assistant to Dr. A. E. Kennelly, who was the discoverer of the Kennelly-Heaviside layer, a very important phenomenon directly related to radio transmission. The theory of radio and the associated circuits constituted the major portion of my work at that institution. In 1914 to 1915 I was engaged upon the application of radio to geo-physical prospecting. This work was done at the Johns Hopkins University, Baltimore. In 1916, I joined the Engineering Faculty of the Johns Hopkins University and I remained with that institution until 1928. While at this institution I was Associate Professor of Electrical Engineering, having direct charge of courses in radio and alternating current. I received my Doctor's Degree from the Johns Hopkins University in 1920. From 1928 to 1932, I have been associated with the Johns Hopkins as Research Associate, having charge of problems relating to radio in connection with Doctor's Dissertations with students in the gradu-

ate department. At the present time I am engaged in consulting capacities in various technical fields or enterprises, having to do with the use of electricity, especially as it relates to oscillatory circuits and vacuum tubes. During all this time I have closely followed the development of wireless telegraphy and telephony.

In the art of radio the first receivers up to 1922 consisted essentially of amateur sets employing *crystals.* These were supplemented by vacuum tube sets as soon as such tubes became commercially available by the amateurs and also by well-recognized firms as the Westinghouse Company. The Westinghouse Company in this connection was functioning in a joint agreement with the Marconi Company, the General Electric Company, the United Fruit Company, the American Telephone & Telegraph Company and its subsidiary, the Western Electric Company. The best talents of these organizations had concentrated their efforts upon the production of a suitable broadcast receiving set. The culmination of such efforts was the introduction into the market of the Westinghouse receiving set, known as the Aeriola Junior and the Aeriola Senior.

The Aeriola Junior was a crystal receiving set, with a tuned circuit. The Aeriola Senior was a vacuum tube receiving set, using the regenerative system. This was followed by a set called the Type D. A., which consisted of a two-stage detector and amplifier. A short wave regenerative tuner known as Type R. A. was connected to this set. In this set there was no radio frequency amplification other than that received by regenerative action in the detector tube. This set operated upon a storage battery of six volts and a B battery.

The circuit and arrangement of the crystal detector set is illustrated in a book entitled "Radio Phone Receiving", published in 1922 by D. VanNostrand and Company, a copy of which I produce and mark "Plaintiffs' Exhibit 60", on pages 73, 74, 75 and 76, a copy of which I produce and mark "Plaintiffs' Exhibit No. 61."

This set did not use batteries. It depended for its operation upon the fact that the current flows only in one direction through the crystal. This type of set was known as the Aeriola Junior. The Aeriola Junior crystal set is further described on pages 175 and 183 of a book

entitled "Textbook of Radio" published in 1922 by the Technical Book Company of New York City, a copy of which I produce and mark "Plaintiffs' Exhibit No. 62." I also produce and attach a photostat copy of several pages, 175 and 183, and mark the same "Plaintiffs' Exhibit 63".

The Aeriola Senior is described on pages 185 and 186 of the said Textbook on Radio, a copy of which I attach and mark Plaintiffs' Exhibit 64, and also on page 134 of the said Radio Phone Receiving Book, a copy of which page 134 I produce and mark "Plaintiffs' Exhibit 65."

The Aeriola Senior was what is called a regenerative set; that is, as shown by the circuit, Figure 51 on page 134, the plate circuit was coupled to the grid circuit, and therefore feeds back into the grid circuit any high frequency signal which is applied to the tuned circuit.

Another set of this same regenerative type put out by the Westinghouse Company at about this time consisted of the D. A. detector and amplifier connected to a R. A. tuner. This type is described in the said Textbook on Radio, pages 177, 178, 179, 180, 181, 182 and 187, a photostat copy of which I attach and mark "Plaintiffs' Exhibit 66".

One of these R. A.-D. A. instruments is here before me, Marked "Plaintiffs' Exhibit 8". A loud speaker put out at about the same time and used in connection with the R. A.-D. A. receiving set is also before me, Marked "Plaintiffs' Exhibit 9".

The circuit of the D. A. detector and amplifier is shown on page 179 of the said Plaintiffs' Exhibit 66. This circuit consists essentially of a detector tube which I mark "A", followed by two audo amplification tubes, B and C. The detector tube receives the signal from the antenna circuits and uses a feed back from the plate circuit to the grid, amplifying thereby the incoming radio signal. This amplification is made sufficiently large that the potential on the grid rises high enough, but not sufficiently high as to cause regeneration in the form of oscillation in the incoming circuit. In other words, the potential of the grid is raised greatly beyond that which would be there, considering the incoming signal without the

regeneration. If alternating current were supplied to the filaments and plates of this circuit, the difference of the potential caused by the alternating current in the filament reacting back upon the grid would introduce a variation of potential which would reflect itself into the plate circuit, producing a large amount of hum. If alternating current be supplied to the plate circuit of this system, the current would only flow during one-half of the cycle; that is, when the plate is positive, and since this voltage would be of an alternating current nature, the plate current itself would change proportional to this voltage, and its variation would be amplified and pass through the circuit as hum. These variations so far transcend signal energies that it may be said that no signal comes through at all, but only hum.

I offer to connect up these sets and give a demonstration, to show that the application of alternating current to these sets would only result in drowning out any signal by excessive hum.

The patentees, in order to devise a set which would be operable upon household alternating current, employed the construction shown in Patent 1,455,141. I offer a photostat, which I mark Plaintiffs' Exhibit 67, which contains at the lower portion a reproduction of Figure 1 of the Patent in suit.

This patent consists of a radio receiving set, in which the functions of operation may be divided into three parts. The imput is first served to the radio frequency amplifiers, from which the signal enters into the detector portion of the system, and is thence transferred to the audio frequency amplifiers to the telephone receiver. In this system both the filament, as well as the plate circuits, are energized from the ordinary A. C. house current through a transformer. In the radio frequency amplifier section of this set the signal is impressed upon the grid of the first tube, Tube No. 3, and then to the second tube, Tube No. 5. The principle of operation is such that while it is impossible to entirely eliminate all the effects of audio frequency hum in Tube No. 3, the frequency of the power supply may be either 60 cycles or 120 cycles, depending upon whether the full wave rectification or half wave rectification—the patent shows halfway rectification, and is of audible frequency. The incoming high fre-

quency modulated wave is of the order of 600,000 cycles per second, which is beyond the audible range of hearing.

In order to illustrate what is meant by a modulated carrier wave, consider the portion A of Exhibit 67. It is noticed here that the frequency disclosed in this portion of the diagram has a variable amplitude. This variable amplitude between the interval a and b in the circuit may be considered the modulation of the carrier wave. Ordinarily the carrier wave without modulation would have the same amplitude through the total interval a-b as shown in B between the intervals a and b as of A. This gradual variation of amplitude represents the super position upon this carrier wave of the voice frequency. In order to function properly it is necessary that this voice frequency modulation be amplified by the first tube and passed on through radio frequency transformer No. 4 to a second tube where it is further amplified and passed on to transformer No. 6. The patent teaches that in this operation any modulation which may arise from the filament current should be carefully avoided, since once such modulation is introduced upon the carrier wave, it can not be removed from the signal by any means; also, that if such modulation be applied to the carrier wave, the incoming signal modulation is also destroyed, thereby resulting in two bad effects: One, the introduction of hum, and the other, the destruction of the signal. In addition to this phenomenon of carrier modulation and distortion, the tube 3 will also amplify any low frequency 60-cycle voltage which may be applied to the tube between the grid 3 and the filament and be passed on through the coupling between tubes 3 and 5 to the following stage. This patent relates that of all the possible couplings, of which there is a large number, between the tubes 3 and 5, choose that coupling which transmits only high frequency carrier wave, and block or strain out all of the low frequency of 60-cycles, so that considering the grid of tube 5, none of the 60-cycles which may be applied to the plate circuit of tube 3 is applied to the grid of tube 5. The order of the signal strength as received by tube 3, compared to the order of the hum introduced by the difference of potential between various portions of the filament and the grid, and also from the rectified portion of the alternating current applied to the plate circuit is of a much higher order, in other words, the hum frequency

signal is 100 times stronger than the signal received from the incoming wireless wave.

The patent here teaches to amplify the signal strength until it exceeds any hum strength, by first keeping the hum down originally as much as possible, and, second, straining it out between the separate high-frequency amplifying stages.

In order to reduce as much as possible the 60-cycle hum introduced by the variation of the filament voltage and the grid, a mid connection is applied in this filament circuit, so that the average potential between the two sides of filament and the grid does not change. Theoretically it is possible to select that point 17 in such a way that no hum would be introduced by the variation of voltage in the filament circuit with reference to the grid. Actually there is always the small remaining voltage, which is the order of thousandths of a volt—a millivolt—which can not be removed this way. In this grid circuit there is a condenser and resistance combination 29, which is connected to the grid circuit 3, so that the tube 3 will always have upon the grid a negative potential, that is, a small amount of hum, which can be exactly balanced out by the mid point 17, and serves to put the tube 3 in the proper condition for amplification, by making the grid 3 slightly negative. However, point 17 is selected so as not to make this hum voltage applied to grid 3 of a very great value, as would, for example, occur if the mid point of the resistance were not properly selected. Similarly, after the signal has passed through the vacuum tube 5, any hum that may be introduced by this tube is strained off again by another or second radio frequency transformer, which removes all the hum frequency introduced by the grid and plate circuits of tube 5. Of course, it will be understood that in some sets that only one tube will be used in this radio frequency portion, and in others two or more tubes may be used. The number of tubes is merely a matter of addition, the important feature being the amplification of the signal frequency, keeping out as far as possible the introduction of 60-cycle or 120-cycle frequencies by means of the mid point connection, which mid point connection at resistance 17 also acts to prevent the signal from being distorted. The signal having been amplified in its radio frequency portion, it is passed through the radio frequency trans-

former, where the power supply frequency is strained out. The signal passed into the second portion, the detector portion of the circuit, is now substantially free from any hum, and the detector portion itself, consisting of a crystal detector, does not introduce hum into the system; yet, there may be hum introduced into the system, due to the proximity of these circuits to adjacent circuits carrying raw alternating current; and provision is made herein by condenser 9-A to strain off any such hum introduced into the detector portion of the circuit. The function of the detector circuit is to bi-pass the high frequency or carrier wave through condenser 10; but at the same time to allow the signal to go through the audio frequency transformer 11, which being an iron core transformer passes only the low frequency, known as the audio frequency, to the next tube 13. In this next tube 13 the signal is again amplified, this time as audio frequency, and passed into the audio frequency transformer 36. From this audio frequency transformer it is passed to the last vacuum tube amplifier 37, also an audio frequency amplifier. In both grid circuits of vacuum tube 13 and 37 the midpoint connection is made to the filament circuit, which prevents the introduction of hum upon the grid circuits of the respective tubes; and even though a very small amount of hum were applied to these grids, the signal strength by this time would be so great, compared to this hum, that it would be of no consequence, that the hum would not be heard. It will be seen that in the instrument as a whole, the signal strength is progressively increased to an amplitude above any possible hum frequency. At the same time the hum frequency is strained out before the signal reaches the detector, and precautions are taken to keep out hum frequency as far as possible from the several stages of the instrument. In this manner the underlying idea is to get the signal strength well above the possible hum frequency strength, and to strain out and keep out the hum frequency. It will be understood that when speaking of hum I refer to the 60-cycle or 120-cycle frequency which comes from the household alternating current applied to the filament circuits of the tubes, or through the rectifier, and delivered to the plate circuits of the tubes. It will be remembered that a frequency of 60-cycle or 120-cycle is audible to the ear; and when these frequencies get upon the circuits, especially when they are applied to the grid circuit or to the

plate circuit and passed to the grid of a succeeding tube, they are amplified and appear in the loud speaker as an audible hum, which, unless eliminated by the means above described, would drown out the signal. It will also be understood that unless precautions are taken in the radio frequency stage, where the signal is weakest, by such means as the mid point connection of the grid, as indicated in the patent, the tube will be caused to operate in such manner that the signal will be distorted; and if once distorted the distortion can not be eliminated in subsequent stages of the instrument, even with the use of radio frequency transformers. Another point to be kept in mind is that if in place of radio frequency transformers some other well-known form of coupling is used between the radio frequency portion of the instrument and the detector, such, for example, as capacity couplings, resistance couplings, or certain other couplings commonly used, the effect above described would not be obtained. In such case hum distortion would be carried through one tube to another and in the final stage you would have hum amplified to the same strength that you had signal strength amplified, and since the signal strength is only a very small fraction compared to the hum strength, no signal would be heard at all. If these portions of the instrument be separated, the hum will not be eliminated. For example, if the radio frequency portion alone is employed, the signal being connected to the input and a telephone loud speaker to the output, the signal would not be heard, but the high frequency carrier wave would be heard as a hiss, if heard at all. In all probability, however, the 60-cycle or 120-cycle hum, which would be picked up by the wires in the radio frequency portion would drown out this signal, so that all that would be audible would be a low frequency hum.

Now, in like manner, if the detector portion were used alone, the signal being applied to the input and a loud speaker or telephone applied to the output, the signal, if heard at all, would be rectified, and therefore distinguishable as dot and dash or speech. But the power frequencies picked up by the wires of the system would, if the system were connected to an alternating current supply, drown out the signals so that all that would be heard would be a hum. If now these two portions are connected together, one would expect twice as much hum; but in point of fact, the hum would disappear. The rea-

son for this is that under these circumstances the power frequency would be strained out between the radio frequency portion and the detector portion, and the signal would be greatly intensified by the radio frequency portion, so that we would have a robust signal passing through the detector, the strength of which would be well above the hum frequency.

Now, likewise, if the audio frequency portion were employed alone, all that would be heard would be the low frequency passing through the signal, in the form of a carrier wave, and there being no detector it would not be heard as speech or music, but the 60-cycle or 120-cycle imposed by the power frequency would drown out the input frequency, so that all that would be heard would be a substantial hum. But if this same audio frequency portion is connected onto the detector portion as above described, and the radio frequency portion, as above described, the result will be that there will be delivered to this audio frequency portion a signal greatly exceeding in strength any possible hum frequency that could get into the audio frequency; and the resultant output of the instrument as a whole would be an undistorted, greatly amplified signal, and an undiscernible hum frequency. Therefore, these hum eliminating means are in no sense mere additions of hum eliminating means to the several portions of the set, and do not act the same when the portions are separate from each other as they do when combined. When combined they form a homogeneous humless set, whereas, taken separately each one hums in a most objectionable way.

I am prepared to demonstrate this, and have before me a model in which we have a set-up of several portions of the instrument. In this model the part marked "A" contains parts corresponding to the similar parts in the radio frequency portion of the Lowell-Dunmore patent. The portion B contains the detector portion, together with the radio frequency transformer and the condenser 9-A, as set forth in the patent. The part marked "C" contains the audio frequency portion of the instrument, and the parts correspond to those shown in the Lowell-Dunmore Patent; that is to say, the input iron core transformer, the tube and the output transformer. The portion marked D. H. J. contains connecting conductors adapted to connect the parts of the three portions of the

instrument to the rectifier device marked "F", to supply rectified current for the plate circuits, and to a transformer portion "E", adapted to supply alternating current to the filaments of the several tubes.

This model is so arranged that we may operate each portion of the instrument separately or altogether. The model also comprises a panel G, which substitutes a three electrode vacuum tube in place of the crystal. When this panel G is substituted in the place of panel B, for example, the wires of the connecting board will be found to connect the plate filament and input circuits of the panel to the power units "E" and "F."

We also have another panel marked I, containing an indirect heated type of tube, operating as a detector in place of the direct heated tube in panel G. When the panel I is substituted in place of B or G the connections connecting board D, H and J will connect the power supply units E and F to the input heater and output circuits of the tube.

I mark the various parts of the model A to J, inclusive, as Plaintiffs' Exhibit 68.

In order to follow the circuits of the various parts illustrated in this panel, we also have colored diagrams, in which the diagram A, B, C, I and G show the wiring on the corresponding panels of the model. The diagrams E and F show the wiring on the power supply units and the diagrams D, J and H show the active connections between the power supply and the panel units; D shows the connections when the crystal panel B is employed; H shows the connections when the panel G is employed; and J shows the connections when the panel I is employed.

The diagrams A to J, inclusive, I mark as Plaintiffs' Exhibit No. 69.

In order to show these various circuits simply and collected together, I also produce diagrams showing the circuits in place when the panels A, B, C, D, E and F are employed. This diagram I mark "Plaintiffs' Exhibit No. 70." Another diagram shows the circuits when panels A, G, C, H, E and F are employed. This diagram I mark "Plaintiffs' Exhibit 71." And another diagram shows

the circuits when the panels A, I, C, J, E and F are employed. This diagram I mark "Plaintiffs' Exhibit 72."

In all of these diagrams, as in the model, the input circuits are colored green, the heater or cathode circuits of the tube are colored red, and the output circuits are colored yellow.

I have operated the panels of this model separately and collectively, and am prepared to so operate the model in the presence of the Court and counsel for defendants. And such operation shows that when panel A is employed singly and the signal is applied to the input and a loud speaker or telephone applied to the output, there is heard a very loud, pronounceable hum. Such carrier frequency as is heard is very faint, and manifested only as a hiss, if heard at all. When the panel B is employed alone, and the signal connected to the input transformer and a loud speaker or telephone connected to the output of the crystal, all that will be heard will be a faint signal. If either of the panels G or I is employed alone, the signal being applied to the input transformer, and a loudspeaker or telephone connected to the output, the signal, if heard at all, will be in the form of speech or music, but the 60-cycle and 120-cycle hum frequency from the power unit will be so strong as to give out a substantial hum, and no signal at all. If, now, either of these panels G or I is connected to the radio frequency panel A instead of having twice as much hum, there will be no hum, because it will be found that the signal will be raised in strength in the radio frequency portion without distortion thereof, and the power frequency will be strained out in the transformer 8 and the signal detected in the detector, and other hum frequency kept out, whereby there will be heard in the output an undistorted signal without hum. This signal, however, will be relatively weak compared to what it would be if a powerful loud speaker were connected thereto. If, now, the loud speaker portion, C, of the model be operated separately, nothing will be heard but an amplified hum; but if this same portion C is connected to the detector portion, which, in turn, is connected to the radio frequency portion, there will be heard a clear, powerful, undistorted signal in the form of speech or music, and no hum will be heard. By this model, also, it can be demonstrated that if in place of transformer 8 there be substituted resistance capacity couplings, one

of which I have here, and mark "Plaintiffs' Exhibit 73", the hum frequency will be passed through, and the output will be a very large hum, which will distort the signal. Likewise, in this model, if the midpoint connections of the grid circuits are changed, such, for example, as a change in the radio frequency portion, the result will be that the signal will be distorted in the radio frequency portion, and such distortion can not be cured in any later portion of the instrument. And hum modulation will also be applied to the carrier frequency, which hum modulation can not be taken out in subsequent stages. Likewise, unless the grid of the radio frequency portion is conditioned by means of the resistance, capacity and resistance 29 of the patent, and its condenser, the tube of the radio frequency portion will not act as an amplifier, and will cause distortion of the signal and introduction of hum. All of these matters can be demonstrated by this model reproduction of the apparatus of the patent in suit.

Similarly, if the resistors of midpoint connections, 18, from the grids of the detector and audio frequency cathode tubes are not connected to the midpoint of the filament, a substantial 60-cycle or 120-cycle hum will be introduced at that point.

I have mentioned that one of these panels, panel I, has an indirect heated type of tube. This merely means that the cathode or tube is separated from but adjacent to the filament or heater whereby the alternating current is sent to the heater circuit and the heat thereof is communicated to the adjacent cathode and heats the same to cause the emission of electrodes upon the basis of which the operation of the tube depends. By this expression the same effect is attained as by connecting the grid of a direct-heated tube to the midpoint of the filament circuit. In this manner the tube is made to be as near like the crystal as is possible in that the crystal inherently does not create any hum itself and in the indirect heated cathode type of tube the tube does not inherent *by* create hum.

I have mentioned that if the grids of the radio frequency portion of the instrument is not connected to the midpoint of the filament, the cathode circuit likewise will be distorted. This will be because the voltage on the grid

will be such that the tube will not operate on the straight portion of its characteristic curve whereby the circuits of the incoming voltage will be greater in one direction than in the other.

I have before me diagrams attached to a stipulation marked "Plaintiffs' Exhibit 74", containing diagrams of models 104, 105, 106, 108 and 109 of certain Stewart-Warner broadcast receiving sets. I find that in all of these are present the same radio frequency portion, detector portion and audio portion; that in the radio frequency portion the signal is amplified and by means of midpoint connections or their equivalents the introduction of distortion and hum are avoided. In the radio frequency portion and detector portion precautions are taken to avoid or minimize the introduction of hum, and likewise in the audio frequency portion precautions are taken to minimize or avoid the introduction of hum; whereby the signal is progressively amplified to a strength far exceeding the strength of any hum introduced or transmitted, and precautions are taken to strain out and keep out hum frequencies.

In order to illustrate this I have colored on photostat reproductions of the drawings annexed to this Exhibit 75, the relevant circuits. The power unit circuits are colored purple, the grid circuits are colored green, the filament or cathode circuits are colored red, the plate circuits are colored yellow, and the loud-speaker output circuit is colored brown.

All these instruments, except the 108 type are of the type termed superheterodyne in which the first two tubes, for example tubes 57 and 56 in the type 104 and corresponding tubes in the other diagrams, are employed to change the carrier frequency from that at which it is received to a lower frequency termed the intermediate frequency. This intermediate frequency, however, is a very high frequency, of the order of 170,000 and odd cycles, which is far above audible frequency. It is, therefore, the full equivalent of the radio frequency portion of the Lowell and Dunmore Patent. These five colored photostats I mark "Plaintiffs' Exhibit 75."

The superheterodyne action is indicated simply in the simplified diagram which I produce, entitled Superhetero-

dyne Type of Radio Receiver, and which I mark Plaintiffs' Exhibit 76.

In this diagram the first tube is represented as receiving and delivering 1060 kilocycles to the input of the "Converter" tube. Another tube called the oscillator tube is delivering a still different frequency to the converter tube which may be 882.5 or 1237.5 kilocycles and reacts on the 1060 kilocycles to form a beat frequency of 177.5 kilocycles which is delivered to the "intermediate" frequency amplifier, which, as above stated, is well above the audible range and is a radio frequency amplifier.

Now, since the circuit of Plaintiffs' Exhibit 75 are prepared in the style frequently followed in the Engineering Departments of manufacturing concerns and show all of the circuits connected to ground instead of connected together as they are in reality, I have prepared and herewith introduce simplified diagrams which correspond with the diagram of Exhibit 75 but which are arranged in simplified form. In these simplified diagrams which I now introduce the same coloring as above mentioned is followed, namely, the rectifier circuits are colored purple, the input circuits are colored green, the filament and cathode circuits are colored red and the plate circuits are colored yellow; the output circuit of the loud-speaker is colored brown. These five simplified diagrams I mark as "Plaintiffs' Exhibit No. 77."

In these diagrams, as well as in the coloring of Exhibit 75 I have omitted the frequency conversion elements and have commenced with the so-called intermediate frequency tube which, as above stated, corresponds to the Lowell Dunmore radio frequency tube.

Referring to Model 104 of Exhibit 77 the radio frequency tube 58 is of the indirect heated type, thus corresponding to a tube in which the grid is connected to the midpoint of the cathode. Moreover, the cathode itself is connected directly to the midpoint of the heater circuit. The same is true of the grid circuit and cathode of the "Wunderlich" tube, which is the detector tube of the set. The audio frequency tube 47 is of the direct heated type. The radio frequency portion is connected to the detector portion by a radio frequency transformer 67976.

The heater circuits receive pure or so-called raw alternating current and rectified current from the rectifier is supplied to the plate circuits. The grid circuit of the audio frequency tube is connected directly to the midpoint of its filament, i. e. the cathode circuit being connected directly to the midpoint of speaker coil 67581, and thence through the yellow wire to the midpoint of the filament circuit; thus in its arrangement the signal is amplified in the radio frequency portion without distortion. Any hum frequency appearing in the circuit, such as in the plate circuits, is strained out when the signal passes through transformer 67976. Thereby there is delivered to the rectifier a robust signal, free of hum, and by reason of the indirect heated tube the introduction of hum is avoided in the detector circuit. In this case there is a resistance coupling between the detector tube and the audio frequency tube whereby the detected low frequency is transmitted to the input of the audio frequency tube and by means of the mid point connection the introduction of hum into the audio frequency portion is avoided. Thus the signal is progressively increased in strength, hum frequencies are strained out and kept out, as the signal passes through the set. What I have said about the model 104 also applies to the model 105. The same is true of the model 106, the only difference that I observe at the moment being that the tube of the audio frequency stage is an indirect heated type of tube instead of a direct heated type which, as before stated, is unimportant in that it is the full equivalent of the midpoint connection.

The model 108 is not a superheterodyne set, but the tube 39 is in the radio frequency portion. The tube 36 being the detector tube and the tube 38 the audio frequency portion. All of these tubes are indirect heated tubes, thus in effect connecting the grid to the midpoint or point of equal potential of the cathode. The signal strength is amplified in the radio frequency portion, the hum introduced thereby is strained out in the transformer 81666 between the radio frequency portion and the detector, hum frequencies are kept out of the detector and the audio frequency portion, whereby there is delivered at the output of the instrument a clear, undistorted signal of greater strength than any possible hum that may be introduced. What has been said of the other models applies to Model 109, all of the tubes of which

are indirect heated type tubes and the transformer 81758 is a radio frequency transformer, all of which acts to cause the instrument to operate as above described.

I have before me an instrument which I am informed is a Stewart-Warner model 109. This instrument is marked "Plaintiffs' Exhibit 78" and the table cabinet that contained it is marked Plaintiffs' Exhibit 82. I am prepared to demonstrate it in the presence of the Court and counsel to show that each stage taken separately will produce hum, but when the various portions are added together hum is eliminated and a clear signal obtained.

I can also demonstrate on this instrument that a substantial hum is delivered from the filter circuit to the plate circuits of the instrument.

I am prepared to demonstrate that by connecting a loud speaker outfit or telephone across the terminals of the rectifier and filter circuits as indicated in the diagram marked "Plaintiffs' Exhibit 79", a substantial hum will be heard, thus showing that the rectifier and filter portion of this instrument deliver to the receiving set a substantial hum.

I am also prepared to show by connecting a loud speaker or telephone instrument in series with the output circuit colored yellow in the diagram marked Plaintiffs' Exhibit 80, a substantial hum will be heard, whereas by connecting said loud-speaker or telephone in series with the input circuit of the detector, it will be found that this hum has disappeared, thus showing that the hum frequencies are strained out in passing through the radio frequency transformer.

Patent 1,635,117 relates to a method of operating the audio frequency amplified tube from household alternating current. In this patent the current is delivered at the mains, 28, to the transformer coil, 24. Two rectifiers are employed, one No. 13 and the other 14. The rectifier 14 furnishes rectified current to the plate circuit of the tubes 5 and 6. The rectifier 13 furnishes rectified current to the grid circuit of these tubes. In the grid circuit the resistance 18 is shunted by a condenser 19. The effect of this arrangement is to apply a voltage in excess of that developed by the signal energy which voltage is regulated

by the resistance 18, thereby making whatever drop may be desired to put the grids out of their potential, to cause the tube to operate in any manner desired. It can, for example, be supplied with sufficient negative potential to entirely stop the plate current. The so-called rectified current which is thus placed upon the grid circuit is not at all the steady direct current which is derived from a battery, but, on the contrary, is a pulsating current, which although the pulses are in the same direction the voltage rises and falls in the same manner as in a true alternating current. This fluctuating voltage would cause the grid voltage to fluctuate in a like manner and thus destroy the operation of the tube but for the means employed by the patentee, to wit, the resistance shunted by the condenser, which causes this fluctuating energy delivered by the rectifier to apply a regulated steady potential upon the grid, the fluctuations being smoothed out by the condenser 19.

In all of these Stewart-Warner sets above referred to the same means are employed. I produce a diagram, Plaintiffs' Exhibit 81, in which I have shown in further simplified form the rectifier and tube circuits of the audio frequency tube in each of these models. Referring to the model 104, for example, it will be seen that the output terminals of the rectifier are connected across the plate circuit and lead, for example, from the minus side through the coil 67581 to the cathode, thence to the plate and thence to the positive side of the rectifier. The grid circuit leads through the resistance 67260, shunted by the condenser 67517, through a portion of the speaker coil 67581 to the cathode. A portion of the speaker coil is common to both circuits and at this point energy is fed from the rectifier to the grid circuit, the resistance 67260 shunted by the condenser 67517, acts to impart the desired grid voltage to the grid and the condenser 67517 operates to smooth out the fluctuations of this voltage and thereby impart a steady desired voltage to the grid.

In the model 106, the plate circuit is from the minus side of the rectifier through the resistance 220 to the cathode, thence to the plate and back to the positive side of the rectifier. The grid circuit is from the negative side of the rectifier through the resistance 81530 to the cathode, thence to the grid, thence through resistance 81382,

which is shunted by condensers G-81580, and thence back to the negative side of the rectifier, the positive side of the rectifier being connected at the opposite side of resistance 220. Thus the rectifier supplies potential to the grid circuit by resistance shunted by a condenser and these operate to apply a steady voltage to the grid and smooth out all fluctuations.

In like manner in models 108 and 109, as shown by the diagram, the rectifier supplies voltage to resistance 81683 in model 108 and 81725 in model 109, these resistances being common to grid and plate circuits. And in both cases there is a resistance shunted by a condenser which operates to smooth out these voltages.

While it is true theoretically that by employing a large number of coils and a large number of condensers in the power circuit, the energy could be smoothed out to a point where the hum would be unobjectionable, to do this would be expensive, and manufacturers do not manufacture filters to such a degree of perfection. In the Stewart-Warner set, as I am prepared to show, on the 109 speaker, which is Plaintiffs' Exhibit 78, the output from the rectifier and filter unit is fluctuating to a substantial degree, whereby there is delivered to the grid circuit of this receiver a substantial hum producing voltage which, but for the circuit employed including the resistance shunted by the condenser would make the voltage on the grid fluctuating to such an extent that the tube would be useless in operation.

PERCIVAL D. LOWELL. Referring to Exhibit 78, this is the chassis and electrodynamic loud speaker unit of the Stewart-Warner 109 model. I received this model mounted in the table type cabinet, which I offer in evidence as Exhibit 82. I removed the chassis of the model 109 from cabinet Exhibit 82 and mounted the chassis on a frame structure hinged to a base so that I might readily move the hinge frame back to view the connections beneath the chassis. I then traced the wiring in the Stewart-Warner 109 and located the tube circuit of the intermediate frequency amplifier. At a point in the output circuit adjacent the plus B connection to the primary winding of the intermediate frequency transformer, I cut the conductor and inserted between the ends of the cut conductor .00025 MFD condenser. I brought out leads

by soldering the leads on opposite sides of the connection to the condenser through a flexible shielded conduit grounded to the chassis, which conduit I ran to a position adjacent a 4-pole double throw switch on the side which I have marked Primary. I then located the input circuit of the detector and at a point in the input circuit remote from the connection of the transformer secondary to the diode second detector tube I cut the conductor and inserted a condenser of .00025 MFD. In order to distinguish the second condenser from the first condenser, I have shown the second condenser in green in Exhibit 80 as part of the input circuit to the detector. The first condenser I have illustrated in yellow. I soldered connections to opposite sides of the condenser in the input circuit and carried these leads through a flexibleshield to the opposite side of the 4-pole double-throw switch to the side I have marked Secondary. Two of the knife portions of the 4-pole double-throw switch were connected through another testing switch, which testing switch has its knife members connected to terminals which may be connected either to a telephone head set or a test amplifier and speaker unit. The 4-pole double-throw switch may be moved to effectively connect the test telephones or test apparatus to a position in the output circuit of the last stage of the intermediate frequency amplifier in series with the primary winding of the radio frequency transformer, in which position the condenser which I inserted in the secondary circuit is shunted by the third blade of the 4-pole double-throw switch, whereby the test apparatus given an observation of the quantity of hum in the output circuit. In testing the Stewart-Warner model 109, I find considerable hum in the output circuit of the intermediate frequency amplifier. However, by transferring the connections between the testing apparatus and the input circuit (green) of the detector which is on the secondary side of the radio frequency transformer, by moving the 4-pole double-throw switch to the side marked "Secondary", the testing apparatus shows a very substantial reduction in the hum, clearly establishing the straining-out function of the radio frequency transformer. In this latter position the fourth blade of the 4-pole double-throw switch serves to shunt the condenser in circuit with the primary winding (yellow) of the radio frequency transformer. The testing apparatus

therefore provides means for observing the relative quantity of hum on the primary and secondary side of the radio frequency coupling transformer. The difference between this hum is very apparent. That is the hum on the primary side is of very substantial amplitude, whereas the hum on the secondary side is of negligible amplitude.

In order that the Stewart-Warner Model 109 may function in its normal state, I provide a double throw single pole switch which when closed shorts out both of the fixed condensers inserted in the output and the input circuits (yellow and green), thereby providing continual circuits in the same manner as originally included in the Stewart-Warner circuit. The leads extending outside of the chassis are thoroughly shielded. In order to determine the quantity of hum delivered by the main filter, I provided connections from the main filter to fixed terminals of the double pole double-throw testing switch connected in accordance with Exhibit 79. These connections were made employing wires, one conductor and the shield already brought out for the test circuit of Exhibit 80. This enabled me to throw the double-throw double-pole switch to a position in which the knife members were connected to the fixed terminals connected to the output of the main filter through a condenser for preventing the passage of direct current into the testing apparatus, which condenser, however, allows the hum fluctuations which are superimposed upon the direct current to pass through to the test ap-aratus.

As before stated, the test apparatus, either in the form of telephones or a power speaker, is connected to the knife members of the double-pole double-throw switch. When connecting the main filter to the testing apparatus, I observed a loud hum from the testing apparatus, showing the imperfect filtering of the alternating current supplied to the circuits of the Stewart-Warner Model 109 and the failure of the main filter to suppress alternating hum at the source. In order to prevent any leakage of hum into the testing apparatus a shield is provided between the input of the testing apparatus and the terminals just described.

PERCIVAL D. LOWELL, would testify as follows:

I was a laboratory assistant at the Bureau of Standards and met my co-inventor Dunmore in 1918. I was working with Dunmore in September, 1921, and conceived the joint invention with Dunmore which resulted in Patent 1,455,141 on or about September 28, 1921. I had an accident from storage battery burns while engaged in work in the radio laboratory and was generally dissatisfied with the disadvantages of storage and other batteries for operating radio receivers. I conferred from time to time with my co-inventor Dunmore and jointly worked out the receiving circuit of Patent 1,455,141.

I worked with Mr. Dunmore on the apparatus embodying the circuits on page 41 of Dunmore's notebook, Exhibit 14 on October 7, 1921, and in the development of the recorder shown in the photograph Exhibit 15 and on the actual apparatus, which is still on file in the Interference Division of the United States Patent Office, and on the bread board set-ups which resulted in the December 8-10, 1921 reduction to practice, shown in Dunmore's notebook, pages 524 and 525 of the Radio Appeal record. I depended on Dunmore to keep the records of our joint work, but I made out some monthly reports and some time cards, and commencing in January, 1922, I kept a notebook, which I offer in evidence as Exhibit 83, pages 596-671, of the Appeal Record. In my monthly report, dated December 15, 1921 to January 15, 1922, which is part of Exhibit 83, page 621, Radio Appeal record, I mentioned some of my work with Mr. Dunmore in connection with the alternating current operation of radio receiving apparatus. In my time cards for 1922, I made an entry under date of January 10, 1922, respecting the further investigations of the alternating current operation of radio receiving apparatus. This further investigation was made as a result of a request by Dr. Dellinger who wished to acquaint himself with some of the work we had done. I wrote a memorandum on January 9, 1922 in which I told Dr. Dellinger that some amplifier work using alternating current had been begun. Dr. Dellinger wrote across this memorandum, "First outline which requires amplifying" and requested me to write a further memorandum. This I did on January 21, 1922, in which I outlined to Dr. Dellinger some of the work which Mr. Dun-

more and I had been carrying on with respect to the energizing the circuits of multi stage amplifiers from alternating current. Dunmore and I continued the testing of various circuits using alternating current for filament and plate supply voltage for electron tube receivers and I kept further notations in a notebook, Exhibit 83 shown at pages 631-671, Radio Appeal Record.

Dunmore and I were busily engaged in the investigation of the alternating current operated radio receiver through January-March, 1922, as will be observed by the notations in my notebook, Exhibit 83, on pages 631-671, Radio Appeal Record. On page 42, Radio Appeal Record page 642, there appears a complete diagram of an alternating current operated radio receiver which Dunmore and I tried January 20, 1922. Checking back with Mr. Dunmore's notebook, Exhibit 14, it is found that on the same date of January 20, 1922, there appears a similar diagram on page 57 of Mr. Dunmore's notebook, Appeal Record page 530, this diagram bearing the notation "Complete A. C. receiver including loud-speaker, January 20 '22", "By F. W. Dunmore, January 20 '22 and P. D. Lowell, January 20 '22."

Mr. Dunmore personally made the Patent Office drawings which were filed in the Application in his apartment at 2371 Champlain Street, Northwest, Washington, D. C. At the time we filed this application, we were both hard put for funds and did not feel that we could pay for having the drawings made. Mr. Dunmore had just been married and his wife's father was dependent upon him for support. During 1921 and the first half of 1922 I worked at night in the Arcade Bowling Alleys in an effort to better my financial condition as I had been married but a short time and had a wife and baby to support. In my spare moments at night at the Arcade Bowling Alleys when I was not actually busy with the Bowling Alleys, I spent considerable time thinking about, working out circuits for and writing descriptions of the work which Dunmore and I were doing on alternating current power supply. It was at the Arcade Bowling Alleys that I wrote out a description about the middle of January, 1922, which I now offer in evidence as Exhibit 84, which description I gave to our attorney for preparation of the Application for Patent. Dunmore visited me at the Arcade Bowling Alleys at night to consult with me about the

alternating current operated radio receiver. However, under Civil Service rules then in effect, it was not possible for me to secure a raise in salary. Our application for patent was not filed until March 27, 1922. As I was financially unable to pay my part of it, Mr. Dunmore paid this in full by check and I reimbursed him later on. The check dated March 25, 1922, is offered in evidence as Exhibit 87. One-half of the attorney's fee for preparing and filing the application was paid by check by Mr. Dunmore, dated June 29, 1922, and I paid my half in cash for I had no checking account. Mr. Dunmore's check is offered as Exhibit 87. If we had had proper means available our application for patent would have been filed much earlier than the filing date of March 27, 1922.

At the end of my monthly report for January 15-February 15, 1922, Appeal Record page 624, I mentioned that shop drawings had been made up for two units, that is, the five stage amplifier unit and the rectifier unit. Mr. Buckley made the shop drawings under the direction of Dunmore and me. The amplifier and rectifier units were made up in the final form shown in Exhibits 19 and 20, and as shown in Photograph Exhibit 17. I traced the connection of the apparatus constituting Exhibits 19 and 20, which diagram is now Exhibit 18.

It will be observed that the apparatus of Exhibits 19 and 20 comprises three stages of electron tube radio frequency amplification, the crystal detector and two stages of audio frequency amplification. The rectifier unit Exhibit 20 supplies raw alternating current to the cathode circuits and rectified alternating current to the plates, and there are a multiplicity of means in the circuits for eliminating hum of the alternating current in the apparatus.

I demonstrated this apparatus on numerous occasions to visitors at the Bureau of Standards Laboratory. I wrote the article which was published as the Bureau of Standards scientific paper No. 450, entitled "An Electron Tube Amplifier using 60-cycle alternating current to supply power for the filaments and plates," Exhibit 8 on page 63 of the Appeal Record, Vol. 3. In this paper I mention that F. W. Dunmore was a co-worker and participated in the development of this instrument. The photograph of the amplifier and rectifier unit illustrates the apparatus as completed by Dunmore and myself in

the early part of March, 1922. I offer this photograph in evidence as Exhibit 85, completed Bureau of Standards A. C. operated set. (Photographs of Exhibits 19 and 20.)

I received numerous requests for information respecting the construction of alternating current operated radio receivers, and in the article appearing in the Electric Journal for December, 1922, page 501, which I offer in evidence as Exhibit 55 (Appeal Record, page 205), Vol. 2, and H. M. Freeman of the Westinghouse Electrical Manufacturing Company refers on page 505 of his article to the article published in the Journal of the American Institute of Electrical Engineers for July 1922, which described the work of Mr. Dunmore and myself on the elimination of batteries in radio receivers.

This Journal is published by the Westinghouse Club, Pittsburgh, Pa. I noted that Westinghouse Electrical Manufacturing Company announced the invention of the alternating current operated radio receiver almost in the very beginning, as shown in a paper published in Pittsburgh under date of June 6, 1923, the article from which I offer in evidence as Exhibit 86.

I collaborated with Mr. Dunmore in the construction of alternating current operated radio receiving sets, Exhibits 24 and 25, the box type of radio receiving set, Exhibit 26, and the Freed-Eiseman neutrodyne alternating current operated set, Exhibits 27 and 28.

I identify the circuit diagram Plaintiffs' Exhibit 50, page 187, Vol. 3, Appeal Record, as the Circuit diagram of the box type set of Exhibit 26.

Mr. Lowell, Mr. Dunmore and myself worked out the manner of including the coupling elements between the stages of electron tubes in the radio frequency amplifier for preventing the transfer of alternating current hum from stage to stage in the receiving apparatus.

I disclosed the box type set to Dr. Louis M. Hull of the Radio Frequency Laboratories, Inc., of Newark, New Jersey, in the early spring of 1924.

I subsequently embodied the circuits of Mr. Dunmore and myself in commercial receivers which I designed for A. H. Grebe & Company, Inc., which were widely sold and successfully operated.

Plaintiff offers the stipulation dated June 5, 1934, entered into by counsel for the respective parties, relating to certain Stewart & Warner sets.

Plaintiff offers to prove that the instrument marked Plaintiff's Exhibit 78 was sold by the defendant, and that when received the circuits were in the condition testified by witness Lowell.

In accordance with the oral agreement between counsel, plaintiff offers the following exhibits, which now appear in Radio Corporation Appeal Record above referred to, namely, the plaintiffs' Exibits 1, 2, 3, 4, 5 and 6.

The deposition of George H. Lewis, appearing on pages 138 to 148 of said record.

The deposition of John B. Brady, appearing on pages 148 to 178 of said record.

Also plaintiffs' Exhibits 8 to 13-F and 46, 47, 48, 49 and 49-A, in said case.

Also the deposition of Roy E. Sweeney, pages 178 to 182, and Joseph D. R. Freed, pages 183 to 190.

Also the statement of counsel appearing on pages 270 and 273 of Vol. 1 of said Radio Corporation Appeal Record.

Also Plaintiffs' Exhibits 50, 51, 52, 52-A, 53, 54, 55, 56, 57, 58 and 59 in said record.

Also the deposition of Alexander E. Reoch, appearing in Vol. 1, pages 275 and 285 of said Record, and the Defendants' Exhibits 11, 12 and 13, referred to in said deposition.

Also the deposition of John H. Dellinger, appearing in said Appeal Record, and also pages 290 to 295, inclusive, 297 and 305 to 311, inclusive, of the deposition of John H. Dellinger in said Radio Corporation Appeal Record, and the Defendants' Exhibits 1 and 7, referred to in said Dellinger deposition.

Plaintiffs also offer to prove that none of the prior art patents, publications or devices offered in evidence in the aforesaid Radio Corporation Appeal Record discloses a radio receiving apparatus adapted to be operated from an alternating current source without emitting hum from said alternating current source; that none of said

prior art references discloses a radio amplifier powered by alternating current and followed by a detector and hum eliminating means effective to permit the operation of said device without developing and producing objectionable hum; that none of said prior art devices discloses the aforesaid combination and an audio amplifier, the whole adapted to be operated by alternating current and having hum-eliminating means permitting the operation of such combination without objectionable hum from the power source; that none of such prior art references disclosed the idea of amplifying the signal strength and straining-out and keeping out low frequency hum; that neither the White patent nor the Heising patent mentioned in the opinion of the Circuit Court of Appeals for the Third Circuit discloses a receiver with a radio frequency amplifier and a detector operated from an alternating current source without hum from the power source, and neither discloses any hum eliminating means which, if repeated in a continued radio frequency unit and a detector unit operated by alternating current would be effective to avoid hum from the power source in the output of such combination and neither discloses nor suggests the use of an audio frequency amplifier in such a combination, nor the idea of increasing signal strength beyond hum strength and straining out and keeping out hum frequencies. Nor does any such reference disclose separate hum-eliminating means in the radio amplifier and detector portions of the instrument, nor in the radio amplifier, detector and audio amplifier portions of the instrument.

Plaintiffs further offer to prove with respect to said Dunmore Patent 1,635,117, that none of the prior art patents or publications or devices referred to in the Opinion of the said Circuit Court of Appeals for the Third Circuit in said Radio Corporation case discloses a means for applying alternating or rectified potential to an amplifier tube and operated the same without power frequency hum and signal distortion; that none of such references discloses the application of alternating or rectified potential to the grid circuit of the tube to apply an electric potential to the grid; that none of said references discloses an alternating or rectified potential to the grid circuit of an amplifier tube and interposing in the grid circuit a resistance shunted by a condenser.

ORAL OPINION OF COURT.

Rendered 18 June, 1934.

IN THE UNITED STATES DISTRICT COURT FOR THE DISTRICT OF MARYLAND.

Percival D. Lowell, Francis W. Dunmore and Dubilier Condenser Corporation, Plaintiffs,

vs.

A. G. Triplett, R. M. Triplett, A. Nelson, C. M. Triplett, Jr., and The Baltimore Gaslight Company, Defendants.

Equity No. 2193.

Baltimore, Maryland, June 18, 1934.

OPINION (ORAL).

COLEMAN, District Judge:

I feel, after the extensive argument; after having had the benefit of the analysis of the various authorities that have been cited, and after a careful reading of the decisions of the courts of the Third Circuit bearing upon these same facts, that the Bill must be dismissed as to the two patents, No. 1,455,141 to Lowell and Dunmore, and No. 1,635,117 to Dunmore, both relating to radio receiving apparatus, primarily for the reason that I am unable to conclude that proper disclaimers have been made with respect to claims 3 and 14 under the first patent, and claim No. 9 under the second patent, as I interpret the requirements of Sections 65 and 71 of Article 35 of the United States Code governing disclaimers. In other words, without going into my reasons at length, I believe the argument advanced by counsel for defendants represents substantially a correct statement of the law in a situation of this kind in regard to disclaimers. I am not prepared, therefore, to accept the argument advanced by counsel for plaintiffs, which is, in effect, that I need not require disclaimers at this time, or, at least, that the disclaimers, which seem to me not to disclaim

at all, may nevertheless, be disregarded for the purposes of this new suit, and that I should proceed to hear the matter on the merits.

I rest my conclusion primarily upon that ground, although I think there is a very persuasive argument producing the same result, to the effect that where a court is prima facie satisfied that the matter has been correctly decided, as a result of litigation in another circuit, where the matter has been thoroughly thrashed out, and the highest court of that circuit has rendered its decision, and the Supreme Court has refused certiorari, that should be binding upon this Court. It is not absolutely binding, of course, if this Court feels that there is some obvious error which ought to be corrected. But I do not believe that the rule in a case of this kind, the rule of comity, requires another trial, and that the District Judge shall wade through what would be the same testimony, perhaps put up in a little different way,—old wine in new bottles,—and perhaps some additional testimony, just for the purpose of permitting one party to find out whether the new trial judge may not be persuaded to reach a different conclusion on matters of the most technical sort, which that same judge must assume have been given the most careful consideration by the two Courts in the other circuit, and also by the Supreme Court itself at least to the extent that the examination of the Petition for Writ of Certiorari requires.

If a different rule is adhered to, it seems to me that patent litigation becomes endless; that it encourages a race around the country, almost, in trying to find out whether one circuit won't upset another. There are exceptions to all rules, of course, and it is perfectly obvious that my decision is somewhat influenced by the complexity of the case,—largely influenced. But it seems to me that that factor weighs in both directions. The very fact that the matter is so complex requires a new court, a court looking at it for the first time, to assume, in the absence of evidence to the contrary, that the other courts have given it all the care that that complexity requires.

The following from the opinion of the Circuit Court of Appeals, Third Circuit, dealing with claims 3 and 14 of Patent No. 1,455,441, (Radio Corporation vs. Dubilier Corporation, 59 Fed. (2) 305-308), clearly shows what that

Court decided, and the reasons for its decision: "The invention is directed particularly to the elimination of hum occurring in the vacuum tubes when they are heated by unrectified alternating current.

"• • • • • Lowell and Dunmore thought this expense could be reduced substantially by using common house lighting current. It was cheaper than current from batteries, but to employ it as a source of electrical energy they were confronted by two obstinate facts: One, house current is alternating current of about 110 volts and has a frequency of about 60-cycles a second; the other, these rapid and continued reversals of direction produce in a sound output receiving set a distortion of the modulation and a strong hum that makes the reception unsatisfactory. Believing they had overcome these difficulties, Lowell and Dunmore invented the apparatus of the patent in suit, operated by home alternating current instead of by direct battery current, and disclosed its elements and their functions by many claims. Claim 3 is typical.

"• • • • • If they had invented this apparatus and all its elements, their invention unquestionably would have been basic; it would have been more than that; it would have been stupendous, for it would have covered the major portion of the practical radio art as it stands today. But they did not invent all of these elements; indeed, they frankly admit they did not. What, then, is the invention?

"• • • • • Therefore, in the final analysis, the claimed invention consists in applying curbed alternating current to the detector section and the audio frequency amplifier section and also to the radio frequency amplifier section in the same way that it had previously been applied to the last-named section. Is this invention?

"• • • • • It follows that the effect of the operation of all these eliminators is an aggregation of separate results, Powers-Kennedy Corp. v. Concrete Co., 282 U. S. 175, 186, 51 S. Ct. 95, 75 L. Ed. 278, all alike and all admittedly obtained by prior art means. From the very nature of the circuit connections the three eleminators act independently of one another, Hailes v. Van Worner, 22 Wall. (89 U. S.) 353, 22 L. Ed. 241. Operating separately yet in conjunction with other elements of the

combination they evolve no new cooperative function, Grinnell Washing Machine Co. v. Johnson Co., 247 U. S. 426, 433, 38 S. Ct. 547, 62 L. Ed. 1196; Office Specialty Mfg. Co. v. Fenton Metallic Mfg. Co., 174 U. S. 492, 498, 19 S. Ct. 641, 43 L. Ed. 1058, and the new result, as claimed, is only that which arises from the well-known operation of each one of these several elements of the combination, Grinnell Washing Machine Co. v. Johnson Co., supra.

"Having before them White and Heising, who told them how to prevent hum in vacuum tubes energized by alternating current wherever positioned in the receiving set, we can not believe it was invention for Lowell and Dunmore to connect a hum eliminator with the audio frequency amplifier tubes even if they were first to do so, or invention to connect them separately with the radio frequency amplifier tubes (as before), with the detector tubes and the audio frequency amplifier tubes.

"* * * * * Being of opinion that in developing the apparatus of the patent in suit the patentees applied in a natural and ordinary way the prior knowledge of the art without making an inventive advance, we are constrained to hold claims 3 and 14 of the patent invalid."

The following taken from the same Court's decision with respect to claim 9 of Patent No. 1,635,117, discloses sufficiently for the purposes of the present case, what the Court found and decided (Radio Corporation vs. Dubilier Corporation, 59 Fed. (2) 309, 312): "The invention, as the plaintiffs state in a few words, consists of means for imparting positive potential to the plate and negative potential to the grid electrodes of a vacuum tube by low frequency alternating current. They say this was new and very useful and therefore amounted to invention, and that Dunmore was the first in the art to conceive and apply it.

"* * * * * But Dunmore says he did more than (b) substitute electric power of one kind for electric power of another kind, defined by their respective sources, in that he (c) rectified or converted the substituted ineffective alternating current into workable direct current. This certainly he did, and if he were the first to do it, or if he did it in a new way it might be invention.

"* * * * Hull's invention was a tool of the art. With this and other tools of the art in his hands, we can not find that Dunmore made an invention when he applied them to an audio frequency amplifier tube effecting grid bias."

There is the additional point, namely, laches, which, however, I do not think is particularly strong in this case. In other words, I would not, on that ground alone, grant the motion, because I think that the defense of laches raises such a highly discretionary question it should be allowed to prevail only in extreme cases. In view of the mass of patent litigation that has surrounded these patents, it is at least open to very serious question whether it would be reasonable to say that a lapse of eight months and thirteen days, after the denial of the petition for Writ of Certiorari, was in and of itself sufficient to warrant this court in saying that the requirement of due diligence under the statute was not met. Thus we have a combination of circumstances which seem to me to be adverse to the plaintiffs' contentions.

The only patent that remains to be considered is No. 1,606,212, granted November 9, 1926, to Dunmore and Lowell, on an application filed March 21, 1922, and it relates to an amplifying unit and reproducer of electrical signals. All claims from 1 to 9, inclusive, are here in suit.

The plaintiffs charge that the defendants' device infringes the device of this patent, and defendants assert the usual defenses of invalidity and non-infringement.

Taking up first the question of validity, with respect to which the burden rests upon those raising it, namely, upon the defendants, I do not find that this burden has been met by the defendants; that is to say, I believe on the proof submitted that the evidence is not sufficient to warrant my saying that the patent is an invalid one for any of the reasons advanced.

I believe it is the reasonable inference from Judge Morris' statements in his opinion, in which he thoroughly considered this same patent in relation to another alleged infringement, in the case of Dubilier Condenser Corporation against the Radio Corporation of America, 34 Fed. 2nd, 450, (from which there was no appeal with respect to this patent), that he did not think the amendments invalidated the patent. It is true he did not finally decide

this question; and, therefore, his decision is not to be taken as final on this question; nor, of course, is it binding upon this Court; but I believe that is a reasonable inference, and I believe that it is a sound inference, supported by the proof in the present case and by the statements contained in the specifications, as disclosed in the patent, without making an examination of the file wrapper and history of this patent in the Patent Office. At least, I would not want to rest my decision upon such doubtful ground.

Turning to the next phase of the invalidity question, that is, whether the patent in suit has been invalidated by reason of prior patents, suffice it to say that the only patent which I understand is seriously urged by the defendants on this point, namely, that to Pridham and Jensen, No. 1,105,924, issued August 4, 1914, does not deal with alternating, but with direct current, and I am satisfied that that is a sufficient distinction, realizing, of course, that in the present case, one of the basic features is that the alternating current is rectified and turned into direct current. But I think the distinction is a substantial one in the art; and I venture to say that Judge Morris had the same view, although, again, as he clearly states, he did not feel called upon actually to decide this question.

Coming then to the question of infringement, with respect to which the burden rests upon the plaintiffs, on all of the credible evidence I reach the conclusion that infringement has been proven. Here, again, I rely to some extent upon the help afforded by Judge Morris, by the very clear analyses which he gives in his opinion of this patent in relation to the alleged infringing device, which he at that time had under consideration.

The question is a highly technical one, and different tests in cases of this kind are bound to produce varying results. I adopt the conclusion of Judge Morris that as a consequence of the amendments, the claims here in suit are to be held to include and to be limited by the interaction or cooperation disclosed in the amendments, and I believe that certain passages from Judge Morris' opinion set forth very clearly the object sought to be obtained by the plaintiffs' device,—the device under the patent here in suit.

Judge Morris said (pages 459-461): "The unit includes a plurality of thermionic vacuum tubes connected in circuit for audio frequency amplification and a loud speaker employing a coil armature and an electromagnetic field coil. The unit was old; but it had been operated only with direct current. The patentees' aim was to obtain faithful, humless reproduction from alternating current operation. Their means for accomplishing this result are set out in claim 2 thus:

"'2. In an apparatus for the reproduction of sound, a thermionic vacuum tube amplifier, an input circuit, an output circuit, a power source of alternating current, means for rectifying said current, a loud speaker reproducer connected in said output circuit and comprising an armature winding and a field winding and circuits for supplying said rectified current to said output circuit and to said field winding, said windings being connected in such relation that disturbing current effects in said loud speaker reproducer are substantially eliminated.'

"The function of the loud speaker is, of course, to convert the audio frequency pulsations of the output electrical current of the amplifier into sound vibrations. To produce this result, means must be employed to enable the pulsations to actuate a diaphragm. A telephone receiver, which functions in this manner and for this purpose, consists of a hard rubber case inclosing a U-shaped permanent magnet of hard steel, to the free ends of which are clamped two soft iron pole pieces, each wound with a coil of small-diameter insulated copper wire in the talking or output current circuit. A hard rubber cap or earpiece, with an opening at its center, supports a soft, sheet-iron diaphragm in front of the pole pieces. As the pulsating current flows through the coils on the soft iron poles, it sets up a magnetic field, which either strengthens the constant magnetic field of the permanent magnet, and so draws the diaphragm a little closer to the poles, or weakens that field by opposing it, and hence allows the diaphragm, which is always under strain of attraction from the permanent magnet, to spring away from the poles. Between pulsations the magnetic field returns to its normal strength, and the diaphragm immediately returns to its original and normal position. Thus the diaphragm vibrates with the pulsations of the cur-

rent, and reproduces the sound vibrations which at the transmitting station caused the current pulsations. This device employs both the permanent magnet of hardened steel and the electromagnet of soft iron pole pieces, which is magnetized only when electricity flows through the coils and loses its magnetism when the flow ceases.

"In the loud speaker of the patent there is no permanent magnet. An electromagnet, only, is made use of. This is in the field coil, 10. Again, the armature is not the loud speaker diaphragm, but is an 'armature coil', 9, in the output circuit of the vacuum tube amplifier, movably supported and connected to the diaphragm. It is so positioned that it is, likewise, within the magnetic field of the electromagnet. As current electricity always produces a magnetic field, and as the pulsating current of the amplifier output circuit passes through the armature coil, an electromagnetic field is also set up by that coil. The fluctuations of that field correspond with the pulsations of the current by which that field is produced. These fluctuations, acting in conjunction with and in opposition to the field or pull of the electromagnet, impart vibrations to the armature coil, and so to the connected diaphragm, proportionate to the current pulsations in the amplifier output circuit. The audio frequency vibrations of the current are thus converted into sound.

"Since the sound output of the loud speaker is the joint product of the two magnetic fields, it is obvious that for accurate reproduction of the transmitted tones the only audio frequency fluctuations in either of those fields that may be permitted to take part in imparting vibrations to the armature coil, and through it to the diaphragm, are those produced by the transmitted-tone variations in the current flowing through the armature coil. So to restrict the magnetic fluctuations in the joint field, when both the amplifier and the loud speaker are powered by 60-cycle alternating current from residence lighting circuits, was, in reality, the problem to the solution of which the patentees addressed themselves. They were the first, so far as the record discloses, to set themselves to this task. Until about 1918, the ordinary telephone receiver was employed. Then the permanent magnet type of receiver, having a weak, but constant, field, ap-

peared. About 1920, the Magnavox, in which the output circuit from the receiving set passed through an armature coil suspended in the field of an electromagnet, the coil of which was energized by a battery, made its appearance. Its power requirements were such that it fell into disuse. Instead of attempting to supply the necessary power, the art directed its efforts to the improvement of the permanent magnet type of loud speaker.

"Lowell and Dunmore, however, went in the opposite direction. They turned to the house-lighting, alternating current for power, and employed means to overcome its 60-cycle, hum-frequency effects in the joint field. In the amplifier the means employed consist of a rectifier, a filter, or condenser, and inductance coil to minimize the pulsations in the rectified current, the old, variable, potentiometer connections in the grid-filament circuit, and a separate, armature-coil circuit. In the field circuit, wherein, also, current variations or pulsations would produce corresponding fluctuations in the magnetic field, the patentees utilize a half-wave rectifier, and the field coil itself to remove, neutralize, or reduce, through its inductance and 'skin effect', the pulsations and hum-frequency variations in the current. In addition the patentees pointed out by amendment of March 27, 1926, that pulsations in the field winding and in the armature circuit are opposite in phase, and that there is a consequent tendency for the disturbing pulsations to offset and neutralize each other.

"Defendant contends that the amendment was and is invalid, in that it contains new matter and was made about six months after defendant's loud speaker went on the market. It further contends that the claims are based on the amendment, and that they, too, must fall, not only for want of a proper foundation in the specification, but also because of anticipation by Pridham and Jensen's patent No. 1,105,924, issued in 1914, and because, if they are not limited by phase opposition, they are merely for an amplifier, old per se, aggregated with the old Magnavox loud speaker. Defendant likewise urges that its loud speaker is not within the scope of the claims when properly construed.

"Plaintiffs take the position that the amendment did not introduce new matter in any invalidating sense, in

that, as they assert, the amendment was in effect but an explanation of the theory upon which the device operated or functioned in part. They further contend that the claims in issue, even if construed to include phase opposition, are not anticipated by the Pridham and Jensen patent; that, since other claims not in issue are specific to phase opposition, the claims in issue should not be so construed to be limited by phase opposition, but that, howsoever construed, defendant's loud speaker comes within them."

* * * *

"Regardless of the fact that Dunmore and Lowell were the first to obtain a reasonably satisfactory reproduction of transmitted sounds from an amplifier loud speaker unit energized by alternating current, it is of course, beyond dispute that the claims can not be given a construction broad enough to confer upon the patentees a right to the exclusive use of alternating current for producing their result. O'Reilly v. Morse, 15 How. 62, 14 L. Ed. 601. Consequently, interpretation requires that the means of their disclosure be resorted to. Separately considered, both the amplifier and the loud speaker were old. 'Skin effect', and impedance, which includes reactance and resistance, were known inevitable consequence of the energization of field coils of the Magnavox type by pulsating current: In view of the lack of novelty in the amplifier and in the loud speaker, separately considered, and of its failure to find any co-operative effect set out in the specification, the Patent Office rejected all claims. Thereafter the patentees amended by adding the matter now appearing in lines 65 to 79 of page 2 and in lines 24 to 33 of page 3 of the patent. All claims were likewise amended. As a consequence of these facts and actions, all claims must be held to include and be limited by the interaction or co-operation disclosed in the amendments. * * * *."

An analysis of the alleged infringing device in the Delaware case, which was held by Judge Morris not to infringe, helps us to understand the defendants' device in the present case, and assists in a proper determination of whether defendants' device in the present case does infringe. Judge Morris says (page 461), speaking of the alleged infringing device in that case, that it "is designed to eliminate from the amplifier circuit and from

the field coil circuit any and all hum producing fluctuations there present, and to leave no residual fluctuations to be neutralized by cooperation between the amplifier and loud speaker. The means used by defendant to make its field coil current steady and pulsationless, and to shield its armature coil from the effect of residual fluctuations or magnet leakage, include, in addition to the impedance and skin effects of the coil itself, a full wave rectifier instead of the half wave rectifier of the patent, a filter to smooth out the ripples in the rectified current, a pot magnet, the placing of the armature coil in as non-inductive relation as possible to the field, and copper rings to shield the armature coil from the effects of any surviving current pulsations."

In the present case the testimony satisfies me that the defendants' device has all of those elements, except the copper rings referred to.

Judge Morris then goes on to say (page 461): "Defendant's mode of operation is the direct antithesis of that of the device of the patent, which intentionally employs neutralization by direct phase opposition. • • • • The phase opposition of the patent is direct, not echoed."

It seems to me to follow as a necessary corollary of what Judge Morris has said, that if the device of the defendant in the case before him, had had direct phase opposition, the situation would have been entirely different. I believe that that different situation is the one which is, in fact, presented here. The fact that the hum is very largely, if not entirely, eliminated in defendants' device in the present case by the filter before it gets to the loud speaker, seems to me not to be a sufficient answer to the charge of infringement, as long as there is direct phase opposition in the coils of the defendants' device. The evidence discloses that to be true, and the conclusion therefore seems to me to be inescapable that since, as I find, plaintiffs' patent discloses a novelty in the form of direct phase opposition, because this was not disclosed prior to the date of the issuance of the patent, and not anticipated by prior patents or by prior use, it is infringed by any similar device which uses its coils in phase opposition.

I think there is much weight to the argument advanced by plaintiffs that the question of elimination in the re-

ceiving set is a question of the character of the filters. It is true that one of the devices put in evidence by the defendants,—one of its own devices,—disclosed virtually the same hum, regardless of the adjustment of the current in the coils. The other device of defendants produced quite different results, and showed that the noise, the hum, was more nearly comparable to that created in plaintiffs' device, when the coils were placed in phase opposition than when they were not placed in phase opposition.

Summarizing my conclusions, the charge of infringement is not overcome, if the novelty feature of a patent is used at all, merely by showing that such use is negligible in degree, and that the party infringing does not actually rely upon such use. I believe that is contrary to the principle that we must follow in a case of this kind. If the novelty exists in the device, and if it has any effect at all, the fact that it is counteracted at times entirely, and at other times only partially, by some other element which is not, as in the present case, claimed to be in itself novel, this is not a sufficient answer to the charge of infringement. As already pointed out, it would appear to be largely a question of the type of filter used, whether or not the hum is eliminated in the filter.

I am not unmindful of the parts of the testimony in the Delaware case which have been stipulated into the present case, to the effect that it did not make any difference in the alleged infringing device in the Delaware case whether the coils were in phase opposition or not. But I revert again to what Judge Morris said in his opinion in that case (page 461): "Defendant's mode of operation is the direct antithesis of that of the device of the patent, which intentionally employs neutralization by direct phase opposition." I can not accept the contention that defendants do not employ direct phase opposition in the present case, because it is in the testimony that they do. I do not think the intent as to what shall be the effect of that employment is the controlling element. In short, the fact that one may infringe poorly, does not absolve him.

There is a good deal more, of course, that might be added to what I have said, but I believe that I have

sufficiently covered the material issues,—those of validity and infringement,—and it is not necessary to become more analytical, or to go further into the details of the subject, especially since the parts of Judge Morris' opinion which I am adopting as part of this opinion, very clearly set forth the details and functioning of plaintiffs' device.

Due consideration has been taken of the fact that the device which defendants placed in evidence,—one of its own models,—more nearly supported their contention than did the device which plaintiffs introduced as being a similar model of the defendants. But I think that a case of this kind is not to be decided solely upon what one or the other of the models may disclose to the human ear by tests made in court, but those tests must be weighed in relation to all other considerations that are involved, and I can not escape the conclusion that we have here a device,—the defendants' device,—which certainly very much more closely approaches plaintiffs' device in its makeup and functioning than did the defendant's device in the Delaware case. I furthermore believe that, had this greater similarity been present before Judge Morris, from the clear intent of the wording which he employed in his opinion, he would have found that such device infringed the present patent, as I now find the defendants' device in the present case infringes.

I will sign a decree in conformity with this opinion.

FINAL DECREE.

Filed 20th July, 1934.

At a Stated Term of the District Court of the United States for the District of Maryland held at the United States Court House and Post Office Building, City of Baltimore, on the 20th day of July, 1934.

Present: Hon. William C. Coleman, United States Judge.

Percival D. Lowell, Francis W. Dunmore, and Dubilier Condenser Corporation, Plaintiffs, vs. A. G. Triplett, R. M. Triplett, A. Nelson, C. M. Tripplett, Jr., and The Baltimore Gaslight Company, Defendants.	In Equity No. 2193. On U. S. Letters Patent Nos. 1,455,141 1,606,212 1,635,117

This cause having come on for hearing preliminary upon a motion filed by the defendants to dismiss the bill of complaint as to patents No. 1,455,141 and No. 1,635,117, because of unreasonable delay in the filing of disclaimers with respect to said patents, and after hearing counsel for the respective parties, the motion to dismiss for unreasonable delay having been denied, and thereupon the defendants, by counsel and leave of court, having filed an amendment to the answer, and the defendants by their counsel in open Court and by leave of Court having renewed the said motion to dismiss and further moved to dismiss the bill as to said patents because of inadequacy of disclaimers as filed, and the same having been heard upon the papers filed by the parties upon said previous motion, and the previous ruling having been adhered to and the motion to dismiss having been granted for the reasons set forth in the opinion, the cause proceeded to trial upon the pleadings and the facts and evidence was adduced with respect to patent No. 1,606,212, and counsel for the respective parties having been heard, it is thereupon

ORDERED, ADJUDGED AND DECREED in accordance with the opinion rendered herein:

1. That plaintiffs herein, Percival D. Lowell and Francis W. Dunmore are the owners, and the plaintiff Dubilier Condenser Corporation is their exclusive licensee of United States Patent No. 1,606,212.

2. That said United States Letters Patent No. 1,606,212 are as to claims 1-9 inclusive, and each of them, good and valid in law.

3. That the defendants, A. G. Triplett, R. M. Triplett, A. Nelson, C. M. Triplett, Jr., and The Baltimore

Gaslight Company, and each of them, having infringed upon claims numbered 1 to 9, inclusive, of United States Letters Patent No. 1,606,212 by selling power amplifiers and loud speakers included in Stewart Warner receiving sets designated as Number 109 which contain and embody the invention and improvement of such claims.

4. That a permanent injunction issue out of and under the seal of this Court directed to the said defendants, A. G. Triplett, R. M. Triplett, A. Nelson, C. M. Triplett, Jr., and The Baltimore Gaslight Company, and each of them, perpetually enjoining and restraining them, their officers, associates, agents, attorneys, servants, workmen, and employees, and each of them, from directly or indirectly making or causing to be made, using or causing to be used, leasing or causing to be leased, advertising or offering for sale, use or lease or causing to be advertised or offered for sale, use or lease, agreeing or contracting to sell or lease or causing to be agreed or contracted for sale or lease, supplying or causing to be supplied, installing or causing to be installed or threatening to offer or contract for sale, lease or supply, or disposing of in any manner power amplifiers, loud speakers, or other apparatus containing or embodying the invention and improvement or involving the use of the invention and improvement of said United States Letters Patent No. 1,606,212, or any substantial, material or vital part or parts thereof, and from infringing upon or contributing to the infringement of said United States Letters Patent in any way whatsoever.

5. That the plaintiffs, Percival D. Lowell, Francis W. Dunmore, and Dubilier Condenser Corporation, do recover from the defendants, A. G. Triplett, R. M. Triplett, A. Nelson, C. M. Triplett, Jr., and The Baltimore Gaslight Company such gains, profits and advantages which the said defendants have derived, received, or made by reason of said infringement of said Letters Patent No. 1,606,212; and that the plaintiffs do recover of said defendants any and all damages which the plaintiffs have sustained or shall sustain by reason of said infringement by said defendants.

6. It is hereby referred to Louis J. Burger, Esquire, as a Master of this Court, to take and state an account of such gains, profits, and advantages, to assess plain-

tiffs' damages, and to report thereon to this Court with all convenient speed. The defendants, their officers, associates, agents, attorneys, servants, workmen, and employees are hereby directed and required to attend the aforesaid Master from time to time as required and to produce before him such apparatus, books, documents and papers and to submit to such oral examination or otherwise as the said Master may require in connection with said accounting and the assessing of said profits and damages.

7. That the bill of complaint herein, insofar as it relates to said United States Letters Patent No. 1,455,141 and No. 1,635,117, be and the same hereby is dismissed.

8. That the plaintiffs recover from the defendants the costs of this suit, insofar as they relate to Patent No. 1,606,212, to be taxed by the Clerk, and that the defendants recover from the plaintiffs the costs of this suit insofar as they relate to Patents Nos. 1,455,141 and 1,635,117.

July 20, 1934.

WILLIAM C. COLEMAN,
United States District Judge.

Approved as to form:

C. V. EDWARDS,
Of Counsel for Plaintiffs.

SAMUEL E. DARBY, JR.,
Of Counsel for Defendants.

ASSIGNMENT OF ERRORS ON BEHALF OF PLAINTIFF.

Filed 15th August, 1934.

(Style of Court and Title omitted.)

Now come the plaintiffs in the above entitled cause and file the following assignment of errors upon which they will rely upon their prosecution of the appeal in the above entitled cause from so much of the decree made by this Honorable Court and made and entered on or about the

20th day of July, 1934, as dismissed the bill of complaint with respect to United States Letters Patent No. 1,455,141 and 1,635,117.

1. The Court erred in dismissing the bill of complaint as to Letters Patent No. 1,455,141 and No. 1,635,117.

2. The Court erred in granting defendants' motion to dismiss the bill of complaint as to Letters Patent No. 1,455,141 and 1,635,117.

3. The Court erred in not overruling defendants' motion to dismiss the bill of complaint as to Letters Patent No. 1,455,141 and 1,635,117.

4. The Court erred in excluding the testimony and exhibits offered on behalf of the plaintiffs and marked under Equity Rule 46 on the issues of validity and infringement by defendants of said Letters Patent 1,455,141 and 1,635,117.

5. The Court erred in holding and deciding in effect that notwithstanding evidence offered on behalf of plaintiffs and duly marked under the provisions of Equity Rule 46 the plaintiffs' case is controlled by the decisions of the Circuit Court of Appeals of the Third Circuit in Radio Corporation of America v. Dubilier Condenser Corporation, Percival D. Lowell and Francis W. Dunmore as to the issues of the validity of Letters Patent 1,455,141 and 1,635,117.

6. The Court erred in not holding that the weight to be given to the decisions of the Circuit — of Appeals for the Third Circuit in Radio Corporation of America vs. Dubilier Condenser Corporation, Percival D. Lowell and Francis W. Dunmore is only that required by comity and in not holding that the evidence and exhibits offered on behalf of the plaintiffs and marked under Equity Rule 46 was sufficient to show that the bases of fact upon which said decisions were rested were erroneous and that upon the implied reasoning of said opinions Letters Patent 1,455,141 and 1,635,117 involve patentable invention and are good and valid in law.

7. The Court erred in not holding Letters Patent 1,455,141 and 1,635,117 to be valid and infringed upon by defendants.

8. The Court erred in not granting plaintiffs the relief as to patents numbered 1,455,141 and 1,635,117 prayed for in the bill of complaint.

WHEREFORE, plaintiffs pray that so much of said decree as dismissed the bill of complaint with respect to Letters Patent No. 1,455,141 and No. 1,635,117 be reversed; that said District Court for the District of Maryland be ordered to enter a decree in favor of the plaintiffs with respect to said patents as prayed for in the bill of complaint herein.

SEMMES, BOWEN & SEMMES,

Solicitor for Plaintiffs.

C. V. EDWARDS,

Of Counsel for Plaintiffs.

ASSIGNMENT OF ERRORS ON BEHALF OF DEFENDANTS.

Filed 11th August, 1934.

(Style of Court and Title Omitted.)

The defendants, A. G. Triplett, R. M. Triplett, A. Nelson, C. M. Triplett, Jr., and The Baltimore Gaslight Company, herein, conceiving themselves aggrieved by the decree entered herein on the twentieth day of July, 1934, now appear by their counsel and present with the accompanying petition for appeal from said decree the following assignment of errors.

1. The District Court erred in holding that Dunmore and Lowell patent #1,606,212 is valid.

2. The District Court erred in holding that the said patent discloses, or the claims thereof define, any patentable invention.

3. The District Court erred in failing to hold the said patent to be invalid because of anticipation and/or want of invention.

4. The District Court erred in holding that the Stewart-Warner Model 109 radio broadcast receiver embodies the alleged invention of the said patent.

5. The District Court erred in holding that the Stewart-Warner Model 109 radio broadcast receiver infringes claims 1-9, or any thereof, of the said patent.

6. The District Court erred in holding in effect that any material differentiation in fact exists between the Stewart-Warner Model 109 radio broadcast receiver and the RCA-Victor radio broadcast receiver held by Judge Morris in the United States District Court for the District of Delaware not to infringe the patent.

A. G. TRIPLETT,

R. M. TRIPLETT,

A. NELSON,

C. M. TRIPLETT, JR., and
THE BALTIMORE GASLIGHT COMPANY

COOK & MARKELL,

By CHAS. MARKELL,

Solicitors for Defendants.

STIPULATION AS TO RECORD ON APPEAL.

Filed 8th October, 1934.

IN THE DISTRICT COURT OF THE UNITED STATES FOR THE DISTRICT OF MARYLAND.

Percival D. Lowell, Francis W. Dunmore and Dubilier Condenser Corporation, Plaintiffs, vs. A. G. Triplett, R. M. Triplett, A. Nelson, C. M. Triplett, Jr., and The Baltimore Gaslight Company, Defendants.	In Equity No. 2193

It is stipulated and agreed by and between counsel for the respective parties, that the Appeal of the Plaintiff and the cross-appeal of the Defendant shall be submitted and argued on one Record; that Rules 14 and 16 of the

United States Circuit Court of Appeals for the Fourth Circuit shall apply to and govern the making up and printing of said Record, and that the following portions of the Record shall be incorporated in the transcript of record on appeal:

1. The pleadings, including

(a) Bill of complaint, including letters patent of which profert has been made in paragraphs 6 and 10;

(b) Defendants' answer;

(c) Defendants' motion to dismiss;

(d) Plaintiffs' answering affidavit.

2. The condensed narrative statement of proceedings and testimony as approved by the parties.

3. Plaintiffs' proffer of evidence under Rule 46 with exhibits attached thereto as follows:

A. Paper Exhibits

4. Dubilier license dated Oct. 20, 1924

7. Dubilier catalogue describing Super-Ducon

7a. Blueprint of wiring diagram of Super-Ducon

14. Time cards, monthly reports and laboratory notebook of Francis W. Dunmore.

15. Photograph of Type A relay.

16. Wiring diagram of Type A relay.

17. Photograph of Bureau of Standards set.

18. Wiring diagram of Bureau of Standards set.

21. Newspaper and Periodical articles, as follows:
New York Globe April 25, 1922, pp. 13
Washington Herald, April 14, 1922, pp. 8
New York Times, April 25, 1922, pp. 9
Washington Star, April 24, 1922, pp. 10
Washington Post, April 25, 1922, pp. 8
A.I.E.E. Journal, Dec., 1922, pp. 488-490
Telephony, Sept. 16, 1922, pp. 21-22

Q.S.T., Oct., 1922, pp. 32-35
Radio, Sept., 1922, pp. 27-28
Radio News, pp. 441
Radio Broadcast, Oct., 1922

22. Photograph of Type B relay.

29. Photograph of Dunmore's laboratory at home.

47. Photograph of Box type.

49. Photograph of Freed-Eisemann set wired for A. C. and rectifier.

50. Diagram of Lowell & Dunmore box set.

53. Publications as follows:—
A.I.E.E. Journal, April, 1922, pp. 242-246
Radio News, July, 1922
Radio, Mar. 1922

55. Electrical Journal, Dec., 1922, pp. 501-505

59. Radio, Nov., 1922, pp. 838-39, 1001-02

60. Radio Phone Receiving, published 1922, D. Van Nostrand Co. N. Y. C.

61. Radio Phone Receiving, pp. 73-76

62. Textbook of Radio, published by Technical Book Co., N.Y.C. 1922

63. Textbook of Radio, pp. 175, 183

64. Textbook of Radio, p. 185.

65. Radio Phone Receiving, p. 134.

66. Textbook of Radio, pp. 177-182, 187

67. Diagram including Fig. 1 of patent 1,455,141 and form of current in different sections.

69. Wiring diagram of Panels A to J inclusive.

70. Wiring diagram of Panels A, B, C, D, E, F combined.

71. Wiring diagram of Panels A, G, C, H, E, F combined.

72. Wiring diagram of Panels A, I, C, J, E, F combined.

74. Stipulation as to Defendants' circuit (Same as Plaintiffs' Ex. 93).

75. Colored photostats of wiring diagram of Defendants' sets SW 104, 105, 106, 108, 109. (109 same as Pltffs' Ex 94)

76. Schematic diagram of Super-heterodyne

77. Simplified colored diagram of circuits of Defendants' sets SW 104, 105, 106, 108, 109. (109 same as Pltffs' Ex. 95)

79. Filter test diagram SW set 109.

80. High frequency test diagram SW set 109.

81. Grid bias diagram SW sets 104, 105, 106, 108, 109.

83. Time cards, monthly reports and laboratory notebook of Percival D. Lowell

84. Pencil description of AC amplifier made by Lowell at Arcade Bowling Alleys.

85. Photograph of Bureau of Standards AC set with Lowell.

86. Pittsburgh Post, June 6, 1923, Radio section p. 1.

87. Dunmore checks to Brady dated June 29, 1922 and to Commissioner of Patents dated Mar. 25, 1922.

B. Physical Exhibits

7b. Super-Ducon

8. Westinghouse RA-Da receiving set

9. Magnavox loud speaker

19. Bureau of Standards receiving set

20. Rectifying unit for Bureau of Standards receiver
23. Original Type B relay
24. Radio Instrument Co. AC set.
25. Rectifier unit for Radio Instrument set.
26. Box Type Lowell & Dunmore receiver.
27. Freed-Eisemann set wired for AC by Lowell & Dunmore.
28. Rectifier for Freed-Eisemann set wired for A.C.
48. Box type receiver set.
68. Demonstration set Panels A to J inclusive.
73. Capacity and resistance coupling unit.
78. Stewart-Warner set 109. (Same as Pltffs' Ex. 91)
82. Table cabinet for SW set 109. (Plaintiffs' Ex. 91)

4. Plaintiffs' Exhibits as follows:

A. Paper Exhibits

90. United States Letters Patent 1,606,212.
92. Wiring diagram of test on Defendants' Set SW 109.
93. Stipulation covering sale of sets by Defendants and correctness of wiring diagrams including sets SW 104, 105, 106, 108, 109.
94. Colored photostat of set SW 109.
95. Simplified diagram of set SW 109.
96. Copy of speaker circuit wiring diagram made on blackboard by Witness, Dr. Lee.
97. Christian Science Herald, Jan. 10, 1928, p. 10.
98. Letter to Magnavox from Dunmore dated June 10, 1922; reply of Magnavox thereto dated June 19, 1922 and reply of Dunmore thereto dated June 28, 1922.

99. Letter to General Electric Co. July 28, 1923 and reply thereto dated Aug. 3, 1923.

100. Letter to Westinghouse Elec. & Mfg. Co. dated July 28, 1923 and reply thereto dated Aug. 3, 1923.

101. License to Brandes Products Corp. dated Oct. 1, 1927.

102. License to Grigsby-Grunow-Hinds Co. dated Nov. 28, 1927.

105. Letter from Plaintiffs to Defendants dated Aug. 5, 1933 notifying of infringement

106. Bureau of Standards publication, Oct. 1922, No. 450.

107. Copy of spring analogue diagram drawn on blackboard by witness Lowell.

108. Instruction book accompanying Majestic set.

109. Wiring diagram of connection for test of hum in filter output.

B. Physical Exhibits

91. Defendants' set SW 109.

103. Majestic set manufactured by Grigsby-Grunow under license.

104. Bread board model panels A to J inclusive.

5. Defendants' Exhibits as follows:

A. Paper Exhibits

A. Wiring diagram of RCA loudspeaker 104.

B. Langmuir patent 1,282,439.

C. Hull patent 1,251,377.

D. White patent 1,195,632.

E. Robinson patent 1,587,084.

F. Pridham & Jensen patent 1,105,924.

G. File wrapper and contents of Patent 1,606,212.

H. Stipulated testimony of certain witnesses in suit of Dubilier Condenser Corporation et al. v. Radio Corporation of America in the District of Delaware. The testimony of these witnesses is included in item 2 and is not to be reproduced as a separate exhibit. The exhibits referred to in that testimony are to be reproduced as follows:

Plaintiffs' Exhibits

32. Diagram Current Path in Audio Amplifier Output circuit, Plaintiffs' Patent

33. Diagram Neutralization of hum in Output Circuit, Plaintiffs' Patent

34. Diagram Current Path for field winding Plaintiffs' Patent

35. Diagram Neutralization of Hum in Field Winding Circuit, Plaintiffs' Patent

36. Diagram Circuit Defendant's Loudspeaker 104

37. Diagram Loudspeaker 104 Current Path in Audio Amplifier Output Circuit

38. Diagram Defendant's Loudspeaker 104 Neutralization of Hum in Output Circuit

39. Diagram Defendant's Loudspeaker Current Path to field Winding

40. Diagram Defendant's Loudspeaker 104, Neutralization of Hum in Field Winding Circuit.

Defendant's Exhibits

77. Electrical Experimenter, Nov. 1919, pp. 636, 684, 686, 688, "Church Sermon Heard over One-half Mile"

78. Pridham and Jensen, U. S. Patent 1,105,-924, Aug. 4, 1914.

79. Simplified Schematic Diagram Radiola 28 connected to speaker, Model 104

80. Waterman Diagrammatic Sketch 104 Speaker Floating Coil Location

B. Physical Exhibits

I. Receiving Set acquired at Baltimore by counsel for Defendants', marked SW 109.

6. Opinion of Court.

7. Decree of the Court made and entered on or about July 20, 1934.

8. Assignment of Errors.

9. Stipulation of counsel as to record.

10. Memorandum of the Clerk.

11. Order to transmit record.

12. Clerk's certificate.

SEMMES, BOWEN & SEMMES,
By GAYLORD LEE CLARK,
Solicitors for Plaintiffs.

C. V. EDWARDS
Of Counsel.

COOK & MARKELL,
CHAS. MARKELL,
Solicitors for Defendants.

SAMUEL E. DARBY, JR.,
Of Counsel.

STIPULATION IN RE EXHIBITS TO BE INCORPORATED IN RECORD AND APPROVAL OF U. S. CIRCUIT COURT OF APPEALS.

Filed 10th October, 1934.

IN THE CIRCUIT COURT OF APPEALS OF THE UNITED STATES FOR THE FOURTH CIRCUIT.

A. G. Triplett, R. M. Triplett, A. Nelson, C. M. Triplett, Jr., and The Baltimore Gaslight Company,
Appellants,

vs.

Percival D. Lowell, Francis W. Dunmore and Dubilier Condenser Corporation,
Appellees.

STIPULATION.

To the Honorable, the Judges of the United States Circuit Court of Appeals for the Fourth Circuit:

Whereas, the Exhibits stipulated to be incorporated in the record on appeals number approximately fifty or more and include, in addition to copies of patents, many photographs, blue prints of drawings—

It is hereby stipulated and agreed by and between counsel for all of the parties, subject to the approval of the United States Circuit Court of Appeals for the Fourth Circuit, that the Exhibits stipulated to be incorporated in the Record on appeal need only be incorporated in ten of the twenty-four copies required to be filed with the Appellate Court under Section 1 of Rule 16, and that the said Exhibits be also included in the three copies of the printed Record to be furnished to the Appellant and the Appellee.

COOK & MARKELL,
CHAS. MARKELL,
Solicitors for Appellants.

SAMUEL E. DARBY, JR., Counsel.
SEMMES, BOWEN & SEMMES,
By GAYLORD LEE CLARK,
Solicitors for Appellees.

C. V. EDWARDS, of Counsel.

Approved this 10 day of Oct., 1934.

JOHN J. PARKER,
U. S. Circuit Judge.

STIPULATION IN RE EXHIBITS TO BE INCORPORATED IN RECORD AND APPROVAL OF U. S. CIRCUIT COURT OF APPEALS.

Filed 10th October, 1934.

IN THE CIRCUIT COURT OF APPEALS OF THE UNITED STATES FOR THE FOURTH CIRCUIT.

Percival D. Lowell, Francis W. Dunmore and Dubilier Condenser Corporation,
Appellants,

vs.

A. G. Triplett, R. M. Triplett, A. Nelson, C. M. Triplett, Jr., and The Baltimore Gaslight Company,
Appellees.

STIPULATION.

To the Honorable, the Judges of the United States Circuit Court of Appeals for the Fourth Circuit:

Whereas, the Exhibits stipulated to be incorporated in the record on appeals number approximately fifty or more and include, in addition to copies of patents, many photographs, blue prints of drawings—

It is hereby stipulated and agreed by and between counsel for all of the parties, subject to the approval of the United States Circuit Court of Appeals for the Fourth Circuit, that the Exhibits stipulated to be incorporated in the Record on Appeal need only be incorporated in ten of the twenty-four copies of the Record required to be filed with the Appellate Court under Section 1 of Rule 16, and that the said Exhibits be also included in the three copies of the printed Record to be furnished to the Appellant and Appellee.

SEMMES, BOWEN & SEMMES,
By GAYLORD LEE CLARK,
Solicitors for Appellants.

C. V. EDWARDS, of Counsel.
COOK & MARKELL,
CHAS. MARKELL,
Solicitors for Appellees.

SAMUEL E. DARBY, JR., Counsel.

Approved this 10 day of Oct., 1934.

JOHN J. PARKER,
U. S. Circuit Judge.

STIPULATION AS TO PLAINTIFFS' EXHIBITS TO BE TREATED AS PHYSICAL EXHIBITS AND APPROVAL OF APPELLATE COURT.

Filed 11 October, 1934.

IN THE CIRCUIT COURT OF APPEALS OF THE UNITED STATES FOR THE FOURTH CIRCUIT.

Percival D. Lowell, Francis W. Dunmore and Dubilier Condenser Corporation,
Appellants,

vs.

A. G. Triplett, R. M. Triplett, A. Nelson, C. M. Triplett, Jr., and The Baltimore Gaslight Company,
Appellees.

A. G. Triplett, R. M. Triplett, A. Nelson, C. M. Triplett, Jr., and The Baltimore Gaslight Company,
Appellants,

vs.

Percival D. Lowell, Francis W. Dunmore and Dubilier Condenser Corporation,
Appellees.

STIPULATION AS TO CERTAIN EXHIBITS

To the Honorable, the Judges of the United States Circuit Court of Appeals for the Fourth Circuit:

It is hereby stipulated and agreed subject to the approval of the Court by and between counsel for the parties hereto that in lieu of reproduction in the printed record, the following exhibits may be treated as physical exhibits provided, however, that any party hereto so desiring may submit to the Circuit Court of Appeals at the time of the argument of the above appeal three copies of any of said exhibits.

Plaintiffs' Exhibits

14. Time cards, monthly reports and laboratory notebook of Francis W. Dunmore
55. Electric Journal, December, 1922, pages 501-505
60. Radio Phone Receiving, published 1922, D. Van Nostrand Company, New York City
62. Text Book of Radio, published by Technical Book Company, New York City, 1922
69. (In part) Wiring diagrams of panels D, H and J
75. Colored photostats of wiring diagrams of defendants' sets SW 104, 105, 106, 108 and 109
83. Time cards, monthly reports and laboratory notebook of Percival D. Lowell
86. Pittsburgh Post, June 6, 1923, Radio Section, page 1
87. Dunmore checks to Brady dated June 29, 1922, and to Commissioner of Patents dated March 25, 1922
108. Instruction book accompanying Majestic set.

SEMMES, BOWEN & SEMMES,
By GAYLORD LEE CLARK,
Solicitors for Appellants.

C. V. EDWARDS, of Counsel.
COOK & MARKELL,
CHAS. MARKELL,
Solicitors for Appellees.

SAMUEL E. DARBY, JR., of Counsel.
SEMMES, BOWEN & SEMMES,
By GAYLORD LEE CLARK,
Solicitors for Cross-Appellees.

C. V. EDWARDS, of Counsel.
COOK & MARKELL,
CHAS. MARKELL,
Solicitors for Cross-Appellants.

SAMUEL E. DARBY, JR., of Counsel.

Dated: October 11, 1934.

Approved:
JOHN J. PARKER,
Senior Circuit Judge.

STIPULATION WAIVING CERTIFICATION OF CERTAIN EXHIBITS.

Filed 22 October, 1934.

IN THE DISTRICT COURT OF THE UNITED STATES FOR THE DISTRICT OF MARYLAND.

Percival D. Lowell, Francis W. Dunmore and Dubilier Condenser Corporation,
Plaintiffs,
vs.
A. G. Triplett, R. M. Triplett, A. Nelson, C. M. Triplett, Jr., and The Baltimore Gaslight Company,
Defendants

In Equity No. 2193.

It is stipulated and agreed by and between counsel for the respective parties that certification by the Clerk of the District Court of the United States for the District of Maryland of the physical exhibits of the plaintiffs and the defendants numbered and described in items 3B, 4B and 5B of the stipulation heretofore filed as to making up the transcript of record on the appeals herein is waived and said exhibits shall be retained in the custody of the respective parties and presented by the respective parties to the Circuit Court of Appeals for the Fourth Circuit at the argument of the appeals in the said Court.

SEMMES, BOWEN AND SEMMES,
By GAYLORD LEE CLARK,
Solicitors for Plaintiffs.

C. V. EDWARDS, of Counsel.

COOK & MARKELL,
CHAS. MARKELL,
Solicitors for Defendants.

SAMUEL E. DARBY, JR., of Counsel.

MEMORANDUM OF THE CLERK.

(1) Petition for Appeal on behalf of Plaintiffs filed 15th August, 1934.

(2) Appeal granted, 15th August, 1934.

(3) Appeal bond waived by Stipulation.

(4) Citation. Dated 15th August, 1934. Service acknowledged 17th August, 1934.

(5) Petition for Appeal on behalf of Defendants filed 11th August, 1934.

(6) Appeal granted, 11th August, 1934.

(7) Appeal bond waived by Stipulation.

(8) Citation. Dated 11th August, 1934. Service acknowledged 16th August, 1934.

ORDER TO TRANSMIT RECORD.

And, thereupon, it is ordered by the Court here that a transcript of the record and proceedings of the cause aforesaid, together with all things thereunto relating, be transmitted to the said United States Circuit Court of Appeals for the Fourth Circuit, and the same is transmitted accordingly.

Teste: ARTHUR L. SPAMER,

Clerk.

CLERK'S CERTIFICATE.

UNITED STATES OF AMERICA,

District of Maryland, to-wit:

I, Arthur L. Spamer, Clerk of the District Court of the United States for the District of Maryland, do hereby certify that the aforegoing pages from 1 to 295, both inclusive constituting Volume I, together with 603 pages of Exhibits bound together in a separate binding entitled "Volume of Exhibits," being Volume II, and certified accordingly, constitute and is a true transcript of the record and proceedings of the said District Court, together with all things thereunto relating in the therein entitled cause of Percival D. Lowell, et al., vs. A. G. Triplett, et al., No. 2193 Equity Docket, made up in accordance with Stipulation of Counsel for the respective parties filed in said cause.

In Testimony Whereof I hereunto set my hand and affix the seal of said District Court this 14th day of December, A. D. 1934.

ARTHUR L. SPAMER,

(Seal of Court.) Clerk of said District Court.

PROCEEDINGS IN THE UNITED STATES CIRCUIT COURT OF APPEALS FOR THE FOURTH CIRCUIT

No. 3816

PERCIVAL D. LOWELL, FRANCIS W. DUNMORE and DUBILIER CONDENSER CORPORATION, Appellants and Cross-Appellees,

versus

A. G. TRIPLETT, R. M. TRIPLETT, A. NELSON, C. M. TRIPLETT, JR., and THE BALTIMORE GASLIGHT COMPANY, Appellees and Cross-Appellants

Cross-Appeals from the District Court of the United States for the District of Maryland, at Baltimore

December 15, 1934, the transcript of record is filed and the cause docketed.

Same day, the original petition for appeal, order allowing appeal, and citation are certified up under Section 7 of Rule 14.

Same day, the original petition for cross-appeal, order allowing cross-appeal, and citation are certified up under Section 7 of Rule 14.

Same day, original stipulation waiving bonds is certified up.

STIPULATION AS TO DEFENDANTS' EXHIBIT G, APPROVED BY JUDGE PARKER—Filed October 23, 1934

[Style of Court and Title omitted]

It is hereby stipulated and agreed, subject to the approval of the Court, by and between counsel for the parties hereto, that in lieu of reproduction in the printed record, Defendants' Exhibit G, File Wrapper and Contents of Letters Patent No. 1,606,212 may be treated as a physical exhibit; provided, however, that any party hereto so desiring may sub-

mit to the Circuit Court of Appeals at the time of the argument of the above appeal three copies of said exhibit.

Semmes, Bowen and Semmes, by Gaylord Lee Clark, Solicitors for Appellants. C. V. Edwards, of Counsel.

Cook & Markell, Chas. Markell, Solicitors for Appellees. Samuel E. Darby, Jr., of Counsel.

Cook & Markell, Chas. Markell, Solicitors for Cross-Appellants. Samuel E. Darby, Jr., of Counsel.

Semmes, Bowen and Semmes, by Gaylord Lee Clark, Solicitors for Cross-Appellees. C. V. Edwards, of Counsel.

Approved.

John J. Parker, Senior Circuit Judge.

Dated: October 22, 1934.

December 15, 1934, the appearance of Clifton V. Edwards is entered for the appellants and cross-appellees.

Same day, the appearance of Samuel E. Darby, Jr., is entered for the appellees and cross-appellants.

Same day, four orders extending the time for the filing of the transcript of record are filed.

ADDENDUM TO TRANSCRIPT OF RECORD—Filed December 19, 1934

ADDENDUM TO

TRANSCRIPT OF RECORD

UNITED STATES OF AMERICA,

District of Maryland, to wit:

At a District Court of the United States for the District of Maryland, begun and held in the City of Baltimore on the first Tuesday in June, (being the 5th day of the same month) in the year of our Lord one thousand nine hundred and thirty-four.

Present: The Honorable William C. Coleman, Judge Maryland District; Bernard J. Flynn, Esq., Attorney; August Klecka, Esq., Marshal; Arthur L. Spamer, Clerk.

Among other were the following proceedings, to wit:

Percival D. Lowell, Francis W. Dunmore and Dubilier Condenser Corporation, Plaintiffs, VERSUS A. G. Triplett, R. M. Triplett, A. Nelson, C. M. Triplett, Jr., and The Baltimore Gaslight Company, Defendants.	In Equity No. 2193.

DEPOSITIONS OF WITNESSES IN THE CASE OF DUBILIER CONDENSER CORPORATION AND FRANCIS W. DUNMORE V. RADIO CORPORATION OF AMERICA; AND, DUBILIER CONDENSER CORPORATION, PERCIVAL D. LOWELL, AND FRANCIS W. DUNMORE, V. RADIO CORPORATION OF AMERICA IN THE DISTRICT COURT OF DELAWARE; GEORGE H. LEWIS, JOHN B. BRADY, ROY E. SWEENEY, JOSEPH D. R. FREED, ALEXANDER ERNEST REOCH, AND JOHN H. DELLINGER, AND STATEMENT OF COUNSEL REFERRED TO IN PROFFER OF EVIDENCE UNDER RULE 46 IN VOLUME I, PAGES 230-262 INC. OF RECORD.

GEORGE H. LEWIS.

GEORGE H. LEWIS, called as a witness on behalf of the plaintiffs, being duly sworn, testified as follows:

DIRECT EXAMINATION BY MR. NEAL:

MR. LEWIS: My contact with the development of radio is as follows:

In 1909 I was a member of the Signal Corps of the Army and I was in the work of developing the radio signals for the Signal Corps and light house service. That continued until 1915, when I was appointed radio expert aide in the Navy in similar developments for the Navy Department. About two years after the war I resigned from the Navy and became associated with Powel Crosley of Cincinnati, the Crosley Radio Corporation and there I was assistant to the president in charge of research work as well as matters of sales and executive policies of that organization relating to radio and radio receiving equipments and broadcasting.

Since 1923 the Crosley Corporation has occupied a position of one of the large three in producing equipment in the United States, the other two being Atwater Kent and Radio Corporation of America.

In 1922 and 1923, so far as I know there were no sets on the market using alternating current, as power for the tubes. Our organization was not active in any development work, and had no knowledge of it. Our competitors that we knew of were not experimenting or putting a set of that type on the market.

While I was with Crosley, probably 50 per cent. of my time was consumed in visiting conventions, conferences, technical assemblies, plants of other manufacturers abroad, making notes, and watching very carefully the development of radio that might affect our business. Throughout the early periods of broadcasting, the design of radio receivers varied very rapidly and a new type might come on the market over night that would make obsolete most of the types in production. We appreciated

very keenly that we must keep our eyes open and take advantage of any new developments that would affect our business.

No investigation had been made of the possibility of operating radio receiving sets from alternating current power in 1922, so far as my knowledge goes. The usual house wiring circuit is 110 volts alternating current.

In the latter part of 1923, I heard an alternating current set had been developed in Washington. In the early part of 1924, I visited Washington with Mr. Crosley as members of the Hoover Radio Conference; they were called to consider certain problems in broadcasting, by then Secretary Hoover. While in Washington, I mentioned to Mr. Crosley that there was an A. C. operated receiver in Washington, and asked him would he like to see it. I had been talking to him about this receiver. I asked Mr. Brady, John Brady, would he make arrangements whereby Mr. Crosley could see this receiver. Mr. Crosley and I went out to Mr. Dunmore's house one evening. It was in the early spring, I recall. They had a fire in the fireplace, and that was the first alternating current receiver that I had ever seen.

Q. 21. How did you happen to inspect that speaker and receiver, was it merely academic interest?

A. Oh, no. We were keenly interested in any new development that might come on the market and we felt called upon to be prepared to know the workings of it, and the cost of it, and if it was possible to adapt our receiver.

Q. 22. Did you make any arrangements with Mr. Dunmore or any of his representatives to go ahead with A. C. operated sets?

A. At the time we inspected this receiver, it was so different from the type of equipment we were making, that we did not know about the rectifier part of it. It looked to us as a very complicated instrument. Crosley was noted at that time for producing a very simple and cheap receiver, and when we looked at this one with transformers and switches and one thing and another, we asked Dunmore if it would cost very much to produce a

receiver of that type in our chassis, utilizing our condensers and coils. In fact, we asked him would he convert one of our battery receivers into this A. C. job.

(Narrative continued.) The receiver was in operation when we inspected it, and we tuned in on the stations in Washington, and listened very carefully to one operation. This is the receiver.

MR. NEAL: Please note in the record that witness identifies the receiver in box with hinged lid which we will mark for identification as Plaintiff's Exhibit A.

(Received and marked "Plaintiff's Exhibit A for Identification.")

Alternating current operated receivers were just brought out commercially, from my recollection the latter part of 1925, or the beginning of 1926. The Radio Corporation of America first brought out an alternating current operating receiver in the latter part of 1925 or the beginning of 1926.

MR. NEAL: Direct examination closed.

CROSS-EXAMINATION BY MR. BARUS:

MR. LEWIS: I began my service in the Signal Corps in 1909, and then I was an expert with the Navy, in 1914. I remained with the Navy throughout the war. My expert work in the Navy consisted of having charge of the design and manufacture of transmitters and receivers in 1917, up until the first of the war. During the middle part of the war I was placed in charge of the Design Division in Washington, where we prepared all the specifications for radio equipment, purchasing, testing, and installing radio equipment on commercial and naval vessels.

I left the Navy two years after the war, the last of 1919 and beginning of 1920.

Next I went with Fritz Lowenstein, the Lowenstein Radio Corporation, and Lowenstein died a short while after that, and after that time I went with Mr. Crosley in the latter part of 1922, just before Christmas. I

should say a dozen broadcasting stations were operating at that time.

Mr. Crosley was making radio receivers of the radio frequency type, when I first went with him. Directly after that we acquired the Precision Equipment Company, licensed by the Westinghouse Company under the regenerative circuit. At that time we made the regenerative detector with tuned radio frequency preceding. I think he still continues to make one. I am not sure about that. When I left him he was making one, which was two years ago. He continued throughout the period I was with him to make a tuned radio frequency receiver. That was the principal type of set, which he made from 1922 on until the time I left him. He always made a regenerative receiver, also a tuned radio frequency receiver. He always had one in his line. The tuned radio frequency receiver was a regenerative receiver at the time he took the license from Westinghouse. He made a regenerative receiver without the tuned radio frequency when he first acquired the license. The models in his line, consisted of seven or eight different type of sets. There was always a model in the line, which was the regenerative detector, a one-tube set. In fact, we had one called the "Crosley Pup," a little set about that big (indicating).

That was in 1923. The latter part or beginning of 1924, we made that small "pup" receiver, I speak of.

He first began to make the regenerative receiver without the tuned radio frequency stage, at the time he acquired the Precision Equipment Company, which I think was the latter part of 1923. He acquired the license to manufacture these receivers in the latter part of 1923. It was at that time he started to make the regenerative detector.

After Christmas, there was little business in 1923. I should say half of the receivers made by Crosley were tuned radio frequency, and the other half consisted of a single regenerative detector receiver that used ear phones.

In the year 1924, the tuned radio frequency receiver was a regenerative receiver. I should say that more than

half of them were regenerative receivers, having tuned radio frequency ahead of the regenerative detector.

I do not recall what means of stabilization was employed for the tuned radio frequency receivers which Crosley made in 1922, whether he had grid suppressors or not at that time.

If I correctly recall he controlled regeneration with his filament temperature. Some receivers had two stages of radio frequency.

Crosley did not manufacture the alternating current receiving set in 1922 because we knew nothing about an alternating current receiving set in 1922.

Crosley did not manufacture an alternating current receiving set in 1923 because we saw our first alternating current operated set in 1923, or the beginning of 1924. We knew nothing about it in 1923. We knew nothing about an alternating current set, hence he could not manufacture them.

Early in the spring of 1924, we saw our first alternating current set in Washington. This set appeared to us to be extremely complicated. It had switches, attachments to the light socket. It had large transformers, very much larger than the type we were accustomed to make, which were audio transformers. Crosley was noted as the Ford of the radio, and his receivers were very cheap. Merchandise of the pocketbook class. We considered if we put all that equipment in there, it would cost maybe two or three times as much as we made and were selling quite a large volume of. Hence, economically, it was not wise for Crosley to change and make that set, particularly as none of his competitors were making a set of that type.

The 104 loud speaker of the Radio Corporation appeared on the market in 1925 or the beginning of 1926. I cannot say whether it was September, 1925, but the latter part of 1925 or the beginning of 1926. That speaker had in it an electrodynamic loud speaker.

I cannot say how extensively the Radio Corporation 104 loud speaker was sold on the market from the time

of its appearance, but I have seen them on dealers' shelves and jobbers' establishments.

Both the National Electric Manufacturers' Association and the Radio Manufacturers' Association have repeatedly called committees in the last two years to define an alternating current set and today they have not reached an agreement. In my opinion a set using batteries either in the A, B or C circuit is not an alternating current set, in spite of the fact that it uses smoothing out means for its plate. Any battery in a set does not make it a complete alternating current set.

A set which was operated from a storage battery for its A supply but has a trickle charger or the like supplying the A battery and its B and C supply from an alternating current source. In these meetings I speak of I had repeatedly defined that as an electric set and not an alternating current set.

The first alternating current operated set, as I have defined it, appeared on the market to my knowledge, the beginning of 1926 or the latter part of 1925.

The Garod Corporation had a set that was developed by Ben Miessner using no batteries. This set used the McCullough alternating current tubes and had no batteries. The Radio Corporation of America also had a superheterodyne that used no batteries.

I was with the Crosley Company from the latter part of 1922 until two years ago. I resigned two years ago to become associated where I am now.

I am now vice-president and general manager of the Arcturus Radio Corporation, who manufacture only alternating current tubes.

Because of the popularity of the alternating current set at the present time and in order that it might have a small number of tubes to produce, we concentrate our efforts on producing only alternating current tubes.

Those tubes are entirely different from the direct current operated set tubes. Certain features in the design

of an alternating current tube are not required in a direct current tube.

I cannot identify the Navy 1605-B amplifier by that number. I was not familiar with the radio receivers after the middle of the war when I was placed in charge of the design division. At that time the receiver was separated from the transmitter and from that time on I was not particularly familiar with the receiver.

With respect to these alternating current tubes which I am manufacturing, they are tubes of that kind useful in connection with the operation of alternating current receiving sets.

It is possible to arrange a circuit whereby you can operate a set on alternating current no matter what type of tube you use, but you will have more difficulty.

The receiver that I saw demonstrated by Mr. Dunmore had a detector that was not an A. C. tube operated by alternating current, which set I believe is that receiver there (indicating).

The Garod set produced by Meissner used an ordinary detector tube, a direct current tube and that operated very satisfactorily. I studied the diagram and inspected the set produced by Garod and I am familiar with that set and also its detector which was a direct current 199 tube. It was operated by the current from the plate circuit of the power tube, but there were no batteries in the circuit at all. The current for the tube was fed to it by the plate of the power tube. I would not testify that that was direct current.

In the Garod receiver there were two types of tubes, one of them was of the low voltage type. At that time Meissner wrote a paper and gave it before the Radio Club of America and shortly after that there was a wild clamor on the part of most tube manufacturers and radio receiver manufacturers to make sets having those tubes. Theretofore the tubes were operated at a filament potential of around six volts. Meissner proposed to use one volt or less and in that class he produced and placed on the market a tube of the low voltage. The Radio Cor-

poration placed on the market the 226 tubes and those tubes were designed for alternating current use.

The Meissner tubes are like the 226 tubes in some respects. They had a heavy stock filament, grid, plate, and glass bulb, base. They differed materially from any tube in use at that time for direct current sets.

With respect to the Garod detector tube, Meissner had designed circuits using one of those A. C. tubes as a detector, but the balancing method and the cost of eliminating the hum he claimed was excessive. The tube which he did use for the Garod detector was a 199 direct current tube designed as a direct current tube. In his paper delivered before the Radio Club of America, Meissner made note of a condition between hum and filament power, whereby he found the smaller the voltage, electric power, in the filament circuit, the smaller would be the hum. Hence he selected the 199 purposely for its application in this receiver to minimize the hum.

I have never seen the graph of a plate current and I could not testify that the current which runs in the plate circuit of a power tube is an alternating current. It is characteristic of most tubes that the current will only pass in one direction through the plate circuit.

The current which lighted the 199 detector of the Garod set, being supplied from the plate circuit of the power tube is not an alternating current nor a direct current such as we obtain from a battery. When we used the batteries we used them to get a direct current, of uniform amplitude. Should that amplitude vary up and down it would give a hum in the detector tube. It is that characteristic that I spoke of when I said that I would not testify that that was a pure direct current. I do not know the condition of the current in the plate circuit of that Garod tube. I have no knowledge as to the character of the amplitude of the current in the plate circuit of that power tube, whether it is an alternating current or not. Supposing it was an alternating current, the effect would be, if it had not been smoothed out at all and the 199 tube were used as the detector that it would cause the detector to hum. How much it would hum depends on how much it was smoothed out, and that depends on

how much it is filtered. How much an alternating current on the filament of a 199 tube will cause it to hum, depends on how much you pay to make your filter in the case of an alternating current from an alternating current generator, but in the case of the voltage derived from the plate circuit of a power tube, I do not think so.

In the case of voltage derived from a rectifier tube, how much the voltage, derived from the rectifier tube, ripples, depends on the size and characteristics of the filter. If you want to pay enough money for your filter you can not make it as smooth as you please but as practical.

You can allow it to fluctuate more or less if it does not do any harm and build a cheaper filter.

By the proper selection of the tube used as a detector in the Garod set and by obtaining the voltage to operate that detector from particular sources, Meissner obtained a detector that operated satisfactorily. If a dry battery were put in there to light the plant of that detector tube, such as is usually used to operate a 199 tube, the set would operate, but it would not be an alternating current set.

During 1924-1925, for instance, there were on the market, various devices known as B-eliminators. These devices were a substitute for the B batteries of any receiving set having appropriate power demands for B supply. It made no difference what the source of A supply was, whether these B eliminators were effective. The A supply might be a storage battery and it might be a trickle charger or a dry battery. Some of these so-called B eliminators supplied both B and C voltage. And that also was independent of the fact that the filament might be lighted from a storage battery or a dry battery or any other appropriate source of current.

I would be willing to produce some circulars and diagrams showing the Crosley sets referred to in my testimony and the dates at which they appeared, but I have not them. I think I can write to Mr. Crosley and ask him if they are available.

RE-DIRECT EXAMINATION BY MR. NEAL:

When I listened to the operation of the alternating current receiver in Washington in 1924, the reception, as re-

gards quality, was very clear and satisfactory. My rank when I left the Navy was senior grade lieutenant. I attended the Naval Academy.

MR. NEAL: That is all.

(Witness excused.)

JOHN B. BRADY.

JOHN B. BRADY, called as a witness on behalf of the plaintiff, being first duly sworn, testified as follows:

DIRECT EXAMINATION BY MR. EDWARDS:

MR. BRADY: My residence is Somerset, Maryland, occupation, patent lawyer.

I represented Messrs. Lowell and Dunmore in the taking out of the two patents in suit, No. 1,455,141 and 1,635,117.

I am familiar with the transactions subsequent to the filing of those applications concerning the exploitation or attempts to have the receiver put on the market by Messrs. Lowell and Dunmore.

From time to time Messrs. Lowell and Dunmore consulted with me with respect to their activities. I recall that the case first came to my office about the middle of January, 1922. Messrs. Lowell and Dunmore told me that they had succeeded in operating a radio receiver without batteries from the alternating current lighting source. The case impressed me considerably because I had had experience previously in radio receiver operation and I have been interested in the subject since 1908.

At the request of Messrs. Lowell and Dunmore I prepared the application which was ultimately filed. It was filed in March, 1922. In the process of preparing that application they demonstrated to me a complete receiver in operation at the Bureau of Standards. The receiver operated satisfactorily and impressed me as being of considerable novelty in the art.

I can point out a publication describing the receiver but the particular receiver is not here.

If I might refer to the publication in the Institute of Electrical Engineers for July, 1922, the complete de-

scription of the receiver that I saw at the Bureau of Standards appears therein. I might also refer to the Bureau of Standards leaflet No. 450 which describes the receiver, the photograph opposite page 351 shows the receiving apparatus and the rectifying unit as I saw the apparatus prior to the filing the application.

The apparatus constituted a multiplicity of stages of radio frequency amplification, a detector, and a multiplicity of stages of audio frequency amplification with a system of supplying power to the tubes for operating from the alternating current lighting circuit. There were means in the receiver for eliminating the hum arising from the lighting circuit supply.

This is the description of the American Institute of Electrical Engineers to which I refer—an article by P. D. Lowell.

MR. EDWARDS: I will offer in evidence pages 488 to 490 inclusive of the proceedings of the American Institute of Electrical Engineers and with the consent of the other side I will substitute another copy of this publication within a day or two. This is dated July, 1922.

(Received in evidence and marked "Plaintiffs' Exhibit No. 7." *See Exhibits, Volume III, page* 62.)

MR. EDWARDS: I also offer in evidence the publication of the Bureau of Standards of October 2, 1922, referred to by the witness.

(Received in evidence and marked "Plaintiffs' Exhibit No. 8." *See Exhibits, Volume III, page* 63.)

THE WITNESS: The set that is referred to in these specifications, is still at the Bureau of Standards. The operation of this receiver at the Bureau of Standards created considerable interest in the industry. Newspapers throughout the country carried descriptions of this apparatus and I recall that Messrs. Lowell and Dunmore received various offers of employment if they would commence the development and exploitation of such a receiver commercially. Mr. Lowell severed his connections with the Bureau of Standards and became chief engineer of the Radio Instrument Company and there

commenced the construction of an apparatus. The apparatus which Mr. Lowell constructed is available, the rectifier unit particularly is still here, and while the receiving apparatus per se has not been located, a unit somewhat similar to that apparatus is here to represent the general character of the equipment.

The Radio Instrument Company proposed to market the apparatus and after the instrument was successfully demonstrated endeavored to do this.

Mr. Lowell was taken ill about September, 1922, and they lost his services throughout the remainder of the year.

The Radio Instrument Company had a contract with Messrs. Lowell and Dunmore for the development of the apparatus and had a license for period of a year in which to develop the invention.

I shall try to locate a copy of the license with the Radio Instrument Company and have it available within the next day or two. That license ran until July, 1923.

After the expiration of that license the steps taken toward exploiting the invention were that Messrs. Lowell and Dunmore had me send a copy of their issued patent to the General Electric Company. I find a reply from the General Electric Company under date of May 25, 1923, in which they refer to this patent.

So far as I can recall now, all I did was to enclose a copy of the patent to one of the engineers of the General Electric Company. The patent was sent to Mr. Wendell L. Carlson of the General Electric Company. I do not believe I wrote a letter. I merely sent a copy of the patent.

Q. 21. Then you received a letter from the General Electric Company?

A. From Mr. Carlson under date of May 25, 1923, a copy of which I have. This is the letter which I received in reply to my letter to Mr. Carlson.

MR. EDWARDS: I offer in evidence this letter received from the General Electric Company. You admit that this letter was written by the General Electric Company?

MR. BARUS: I do not admit it was written by the General Electric Company. I have no objection to the letter.

(Received in evidence and marked "Plaintiffs' Exhibit No. 9." *See Exhibits, Volume III, page* 75.)

I did not reply further to that letter. Further action came principally by personal contact. I was advised that the General Electric Company was not that corporate body which would purchase patents from individuals and Messrs. Lowell & Dunmore desired to commercialize their invention. I only saw Mr. Carlson on this matter, and I was referred to the office of the Radio Corporation of America. Their Mr. Adams, the general patent attorney for the company, took the case under advisement and he consulted with me in my office at Washington.

I brought the patents to the attention of Mr. Adams. Mr. Adams wrote under date of November 16, 1923, to the effect that the Radio Corporation was not interested. I have the letter from Mr. Adams.

MR. EDWARDS: I offer the letter in evidence.

(Received in evidence and marked "Plaintiffs' Exhibit No. 10." *See Exhibits, Volume III, page* 76.)

As to the next step taken, I recall being invited to a demonstration by Messrs. Lowell & Dunmore about July 31, 1923, where the Radio Instrument Company set was demonstrated to me. The set operated satisfactorily from the alternating current lighting socket and the inventors told me at that time they were planning to construct a different set but they were having trouble getting materials, particularly the type of rectifier tube required in the power supply system. During the summer of 1923, I recall that the inventors were building that different type of set and the set was completed about the end of 1923 at which time I was again invited to the laboratory of Mr. Dunmore, where I heard this apparatus operating. That set is here and I can identify it.

This apparatus was completed by Messrs. Lowell & Dunmore approximately the end of December, 1923, and is the same set that was identified by Mr. Lewis and heretofore marked Plaintiffs' Exhibit A for Identifica-

tion. The set as completed operated satisfactorily including its assembly of three stages of radio frequency amplification, an electron tube detector and two stages of audio frequency amplification and supply of the alternating current and eliminated the hum and it impressed me considerably. Messrs. Lowell & Dunmore asked if I might know who would be interested in the manufacture of such equipment, and I gave them many names. In the course of the next few months representatives of various manufacturers visited Mr. Dunmore's laboratory or the inventors exhibited the set——

By the Court:

Q. 32. Do you get the information from being there when they called or they telling you?

A. I was there.

By Mr. Edwards:

Mr. Brady: To my own knowledge I recall particularly a demonstration at Mr. Dunmore's laboratory to Mr. Powel Crosley and Mr. George Lewis as occurring in the spring of 1924. This apparatus was operated and received broadcast music. The set operated from the lighting circuit without disturbance from hum and with satisfactory signal. The demonstration was in the spring of 1924. The date is May, 1924.

This particular set was completed about December, 1923, and demonstrated throughout the spring of 1924.

The Crosley demonstration was in the spring of 1924, instead of 1923, in May of 1924. There were a number of other demonstrations of this apparatus. I recall a demonstration to the Brandes Laboratories, and one made to the Boonton Rubber Company.

There were others. There were a considerable number. The set created great interest. I remember the Timmons Radio Products Corporation, the Pathe Phonograph & Radio Corporation, the Wired Radio Company and the Freed-Eisemann Radio Corporation, and as a result of one of these demonstrations I recall the request from Mr. Joseph D. R. Freed of the Freed-Eisemann Corporation to have Messrs. Lowell and Dunmore convert one of the standard Freed-Eisemann neutro-

dynes, then popular for battery operation, for operation from the alternating current lighting circuit.

My connection with the Freed-Eisemann matter was merely to state to Joseph D. R. Freed in person that if he cared to have such a conversion made he must supply Messrs. Lowell and Dunmore the necessary apparatus.

That apparatus was supplied by Mr. Freed and Messrs. Lowell and Dunmore set about prior to June, 1924, to convert this apparatus. It was so converted and I recall in June, 1924, Mr. Freed came to Washington to see how this set operated. The apparatus is here and I can identify it.

The apparatus com-rises a neutrodyne of two stages of radio frequency amplification, an electron tube detector and two stages of audio frequency amplification with circuit rewired to operate with the alternating current lighting circuit.

As a part of this apparatus there was constructed by Messrs. Lowell and Dunmore a power supply system including a power transformer with a rectifier unit, a filter system and circuit terminals for connecting the unit with the Freed-Eisemann neutrodyne for operating the receiver from the alternating current circuit.

MR. EDWARDS: I will ask to have the two sets marked for identification as Plaintiffs' Exhibit B, comprising the unit and the receiver marked Freed-Eisemann.

(Received and marked respectively "Plaintiffs' Exhibits B and B-1 for Identification.")

MR. BRADY: I was present at the demonstration on June 21, 1924, at which Mr. Freed was present. He came from New York especially to hear this set work.

There were numbers of licenses granted under these patents, as I recall. The Dubilier Condenser Corporation obtained a license for the manufacture of their Super Ducon. The Timmons Radio Products Corporation obtained a license, also the Fansteel Products Company of Chicago, The Grigsby-Grunow-Hinds Corporation, the Willard Storage Battery Company, the Elkon Works, Incorporated, the Argus Radio Corporation, the Brandes

Products Corporation, the Briggs-Stratton Corporation of Milwaukee, Wisconsin, and probably others of which I have no knowledge, and can not recall at this time. These instruments were in writing.

Toward manufacturing or making the device of the relay patent, the following was done. The Morkrum Company, manufacturers of printing telegraph apparatus, acquired a license from Mr. Dunmore for the manufacture of apparatus under the Dunmore patent for use in the operation of automatic printers by line wire or radio. Numbers of these relays were produced.

CROSS-EXAMINATION BY MR. BARUS:

MR. BRADY: My experience, prior to the time that I became solicitor for Lowell and Dunmore in connection with the filing of the applications for the patents in suit was as follows: I had been an Ensign in the Navy during the war, and opened my office for the practice of patents immediately following the war. Mr. Lowell had come to me in a number of instances for the soliciting of other patents, and in that way he apparently had contact with me with this present invention, and when it was produced, sought my services again.

My connection with the Radio Instrument Company was that they had come to my office a few times for the soliciting of patents, that is all. I had absolutely no other connection.

The people connected with the Radio Instrument Company were, as I remember, Mr. Brent Daniel, their president, and a number of members of their staff, including H. A. Snow. Mr. Snow, by the way, was assistant to Mr. Lowell, when Mr. Lowell wired the apparatus which I have identified. There was a Colonel Abadie associated with the company, and I am sure numerous people that I do not recall at the moment.

Probably the first time that I made any attempt to interest others in the exploitation of the alleged inventions under these Lowell & Dunmore patents, or any of them, was the mere sending of a copy of the patent to Mr. Carlson, that was in May, 1923, immediately upon issue. There was really a curiosity in me to see this apparatus developed, and I sent it to Mr. Carlson, thinking probably he had connections by which it might be done.

I recall no attempt by me to interest any one in this set at an earlier date than that.

Mr. Lowell and Mr. Dunmore told me of their activity at the Radio Instrument Company, and throughout the process of work I received reports from Mr. Lowell of the progress of his work.

I first saw the set, Plaintiffs' Exhibit A for Identification in the Christmas holidays of December, 1923, at Mr. Dunmore's Laboratory, in his home. The circumstances surrounding the demonstration were that as attorney for Messrs. Lowell & Dunmore, I was invited to Mr. Dunmore's residence to hear the set in operation, as he thought he had quite an achievement. I therefore attended the demonstration and listened to the operation.

When I saw this set in operation it had an electron tube detector, an N tube. An N tube is a special type of tube developed by the Western Electric Company which has a low current consumption filament. The type of tube is somewhat popularly known as the peanut type.

There were other peanut tubes in it beside the detector. There were three stages of radio frequency amplification, all of which were N tubes operating from the alternating current lighting source. The voltage requirement for the filament of the N tube was, I believe, about 1.6 volts. The other tubes in the set when I saw it, were two UV-201-A tubes, used for audio frequency amplification, connected as a 2-stage audio frequency amplifier following the electron tube detector. There was also a rectifier tube. This rectifier tube, however, was of the ordinary 3-electrode type and was either a UV-200, or a UV-201-A tube with the grid and plate electrodes connected so that the tube functioned as a 2-electrode rectifier, somewhat similar to the old Fleming valve type. It functioned as a half-wave rectifier, not a full wave rectifier. Only the one-half wave rectifier, was used.

This half-wave rectifier tube was of the UV-201-A or UV-200 type and the voltage requirement was perhaps 4.5 or 5 volts.

I am afraid I can not recall whether it was UV-200-A or UV-200, but it was of that type, of that class of tube.

Voltage was applied to the plate circuit of that rectifier tube as follows: The 110-volt A. C. lighting circuit supplied a transformer. The transformer had several secondary windings, one secondary winding having a step-up ratio, so that the primary winding supplied a voltage to the rectifier in excess of 110 volts. That is as close as I can answer your question.

As to how much in excess of 110 volts, the voltage supplied to the rectifier tube was, I should say it was perhaps 350 volts.

There were many devices to filter the rectified current supplied by the rectifier tube. There were condensers, reactances, resistances shunted by condensers, capacities disposed in their proper position in the circuits for accomplishing that function.

Starting nearest to the rectifier tube, the first device was in the form of the condenser, across the output of the rectifier.

I cannot testify as to what was the capacity of that condenser. As to the values, I can not testify.

The next devices following along from the rectifier tube were reactances in series with the condenser.

So far as I can recall there was perhaps one reactance in each side of the circuit.

The next device was a chain through another condenser. I might say that my memory does now seem to bring back that the capacity of that condenser was six microfarad.

The next device, I believe, was a further reactance in series in the plate system of all the tubes. I do not know the constants of that device. I am not certain it was there. I am trying to recall it the best I can. I think it was a winding of an audio frequency transformer, the secondary of which had been burned out and the primary was used as the reactance in that circuit. As near as I can recall that device was in series with the plate circuits of all of the tubes.

The next device to which I refer as a filtering device was in the separate systems, the audio frequency ampli-

fier, the radio frequency amplifier and the detector tube, there were separate filtering devices.

Continuing to proceed with the plate circuit. I do not recall the filtering device in circuit with the plate circuit of the audio frequency tubes next in line to the inductance of which I last spoke or any other element specifically in that circuit.

With reference to the plate circuit of the radio frequency tubes, I do not recall any other device in that plate circuit.

With reference to the plate circuit of the detector tube, I recall no particular filter device in that plate circuit. That detector tube was a special tube.

So that so far as the plate circuits of this device are concerned, the filtering devices were first a condenser in shunt; next an inductance in series; next a condenser in shunt; next an inductance in series, and that is all.

Referring to the grid circuit of the radio frequency tubes the source of supply for a C bias on the grids of those tubes was a special small sized C battery intended to fix the potential of the grids. This battery was perhaps eight volts in value.

Referring to the detector tube no source of voltage for C bias was applied to the detector tube; there was no battery, and no other source.

Referring to the audio frequency tubes, the source of C bias used on these audio frequency tubes was, as I recall it, that a portion of the battery previously mentioned was used for biasing the audio frequency tubes also.

Referring to the filament circuit of the radio frequency tubes, the source of supply for filament voltage of those tubes was raw alternating current obtained from a secondary winding on the power transformer supplied from the alternating current lighting socket. I might add that I recall a connection taken from a potentiometer across the filament circuit of the audio frequency amplifier tubes with a tap connection to the grids of the audio frequency amplifier tubes.

There were two potentiometers. One potentiometer was positioned across the filament circuit of the audio-frequency circuit with a separate tap connection to the grids of tubes. The first potentiometer I have reference to was in the radio frequency amplifier system, entirely separate and independent and isolated from the potentiometer in the audio frequency amplifier system.

With reference to the potentiometer across the filaments of the radio frequency amplifier tubes, on this potentiometer, the grid return of the radio frequency tubes was connected approximately the center. I often moved the potentiometer myself from one side to the other and heard hum come in and then eliminated the hum by balancing.

The plate return of the audio frequency tubes was connected to one end of the potentiometer.

I do not recall in that particular set any devices in the grid circuit of the radio frequency tubes located between the grid and its connection to the potentiometer. In other sets, I do. The C battery to which I have referred was located in that position. I had overlooked that. That is the only thing which I recall so located, except, of course, we had the usual tuned circuit, between the grid and the filament system.

With reference to the audio frequency tubes the C batter- connection was located between the grid and its return to the potentiometer.

With reference to the radio frequency circuit, the input system of the first tube was tuned by a condenser shunting an inductance. The other stages were coupled through transformer systems of the audio transformer type.

That is, the stages of radio frequency were not tuned after the input circuit in that particular set.

Returning to the audio frequency stages I do not recall any other device in the grid circuit except the C battery between the grid and its return to the potentiometer across the filament circuit except, of course, the coupling transformer within the system. The radio frequency circuit was not tuned.

Referring next to the plate circuit of the detector tube, the source of voltage supplied to that circuit was rectified alternating current from the rectifying system. It was also the same as to each of the other tubes.

With reference to the filament circuit of the detector tube, the source of voltage used to light that filament was raw alternating current obtained from the power transformer system.

I recall no device located in the filament circuit of the detector tube between the transformer and the filament.

XQ. 115. Was there any potentiometer bridged across this filament circuit such as you have spoken of in connection with the other circuits?

A. The Potentiometer used to supply the radio frequency amplifier tubes was virtually across the filament of the detector tube, independent of the potentiometer across the filaments of the audio frequency amplifier tubes.

XQ. 116. That is, there was no separate potentiometer for the detector tube?

A. In that particular set, no, but others, yes.

There was the grid leak and grid condenser located in the grid circuit of the detector tube between the grid and is return to the filament and a coupling device, coupling the detector to the output of the radio frequency amplifier. The plate circuit of the detector tube was returned to one end on the potentiometer. The output circuit used in connection with this set consisted of a Brandes table talker, loud speaker, and if you will reverse the cabinet you will see that it is a self-contained apparatus, with the speaker inside of the cabinet.

So far as I recall this speaker attached to the plate circuit of the last audio frequency tube was in series with the output circuit of the audio frequency tube in the last stage.

This speaker was not an electrodynamic loud speaker.

There was some sort of a by-pass condenser associated with the windings of the loud speaker and that by-pass condenser was in shunt with the windings of the loud

speaker. I do not know the value of that condenser. I do not know the value of the condenser used as a grid leak for the detector. I do not know the value of the resistance used as a grid leak for the detector.

I first saw the set marked Plaintiffs' Exhibit B for identification complete on June 21, 1924 at a demonstration given by Mr. Dunmore's laboratory to Joseph D. R. Freed. I was invited to that demonstration for Mr. Dunmore told me that he had succeeded in finally adjusting the apparatus for the elimination of hum and wanted to show it to me.

So far as I can recall it utilized UV 201-A tubes throughout including the tube detector.

This set is a so-called neutrodyne set and has two radio frequency stages, a detector and two audio frequency stages.

The source of plate voltage supply used on the audio frequency stages of this set was rectified alternating current obtained from a special power transformer, the primary winding of the power transformer connected to 110 volt alternating current lighting socket. There were a multiplicity of secondary windings, one of the secondary windings led to the filament of a rectifier tube and another secondary winding to the output of the rectifier for delivering rectified energy to the filter system for energizing the plate circuit of the audio frequency stages.

The rectifier tube used in this set at the time of the demonstration to which I refer was a UV-200 or UV-201-A or a tube of that class. It was a three-electrode tube with the grid and plate connected together to function as a two-electrode rectifier.

Only one rectifier tube of that type was employed.

There was of course a filter in the output of the rectifier, before getting to the plate circuit, and that filter corresponded to the filter I have already described in connection with the set of December, 1923.

The elements of the filter to which I refer are a shunt condenser, series reactance devices, another shunt condenser—I cannot definitely recall whether one or two series reactances. There was at least of course one in

series in the filter circuit between the two shunt condensers.

After passing the second shunt condenser, I do not recall a second inductance in this case. Other devices in this plate circuit before reaching the plate of the last audio stage consisted in a shunt circuit consisting of a resistance and a condenser forming a shunt device which would pass the required plate potential and provide hum eliminating means.

This device was located in series in the plate circuit of the audio frequency amplifier in all the plate circuits of the tubes. I do not know the value of the shunting condenser to which I referred, nor do I know the value of the resistance. The resistance was in series to the plate circuit supply, not in shunt. It was in series with the plate circuit supply of all the tubes.

Now, referring to the other audio frequency tube, there was an additional device in that circuit which I have not mentioned, consisting of a C biasing battery. It was not in the plate circuit, so far as I recall.

I do not remember any additional device in the plate circuit of the radio frequency tubes.

Now, referring to the grid circuits of the radio frequency tubes, I do not think there was a C battery in that circuit. There was no C battery in the grid circuit of the detector. There was a C battery in the grid circuit of the audio frequency tubes, a separate C battery in the first stage of the audio frequency, and a different C battery in the second -tage of audio frequency amplification.

The C battery for the first stage of audio frequency amplification consisted of a volt and a half. The C battery for the second stage of audio frequency amplification was approximately eight volts.

The source of filament current for the detector in the set, Plaintiffs' Exhibit B for identification, was raw alternating current obtained from the secondary winding on the transformer, which winding was entirely independent of any other secondary windings on the power transformer. There was a potentiometer bridged across

this winding with the connection from the potentiometer to the grid circuit of the detector tube.

The source of filament voltage for the radio frequency tubes in Plaintiffs' Exhibit B for identification was raw alternating current obtained from an entirely independent secondary winding on the power transformer. That filament circuit had a separate potentiometer bridged across the circuit, with a tap connection to the grid system from the potentiometer to the radio frequency amplifier tubes.

The position of the plate circuit return in the radio frequency tubes to the filament circuit was that the connection was taken from one end of the potentiometer in the filament circuit.

The position of the plate circuit return to the filament of the detector was to one end of the separate and independent potentiometer in the filament circuit of the detector tube.

I recall a condenser and the resistance in shunt connected in the grid circuit of the radio frequency tubes between the potentiometer and the grid, the resistance was in series and not in shunt. And the condenser was in shunt with the resistance, not in shunt with the grid circuit.

There were no separate resistances and shunting condensers in each grid circuit of these two tubes. The one resistance and condenser were arranged to be effective in both, so far as I recall.

The grid leak and the grid condenser and a tuned input circuit for the detector tube were located in the detector grid circuit between the grid and its return to the filament. In this case, each of the radio frequency input circuits were also tuned.

There were three separate tuned circuits, the two stages of radio frequency amplification and the tuned input to the detector.

XQ. 169. Please describe what stabilizing means, if any, was used in this set?

MR. EDWARDS: I object to that. He is asking him about stabilizing means, that is function.

THE COURT: The examination in chief was restricted to mechanism, and now of course you have to refer to function in a sense.

MR. BARUS: I think this might be simplified, your Honor, if he would show a circuit diagram of the set, and that would save a lot of time.

THE COURT: If Mr. Edwards has no objection to that; I assume he has not.

THE WITNESS: I have them available.

THE COURT: If you get a diagram, it will save us all time. Do you find one?

THE WITNESS: Yes, your Honor.

THE COURT: You are not going to offer it in evidence, but just want it marked for identification?

MR. EDWARDS: If I may be allowed to interpolate. I will ask him, and put them in evidence.

MR. BARUS: I have no objection.

RE-DIRECT EXAMINATION BY MR. EDWARDS:

MR. BRADY: I have a diagram of the set marked for identification A which I now present.

MR. EDWARDS: I offer this diagram in evidence on behalf of the plaintiff.

(Received in evidence and marked "Plaintiffs' Exhibit No. 11." *See Exhibits, Volume III, page* 77.)

THE WITNESS: Here is also a diagram for the set marked for identification Exhibit B.

MR. EDWARDS: I offer this diagram as Plaintiffs' Exhibit No. 12.

(Received in evidence and marked "Plaintiffs' Exhibit No. 12." *See Exhibits, Volume III, page* 79.)

MR. BARUS: I object to the diagrams on the ground that the parts are not identified in any way as to what they show.

THE COURT: I think that objection is not well taken. I think we may assume that these are drawn in a conventional form, unless he shows to the contrary.

RE-CROSS-EXAMINATION BY MR. BARUS:

MR. BRADY: I did not make the diagram, Plaintiffs' Exhibit No. 11, nor did I make the diagram Plaintiffs' Exhibit No. 12.

The diagram, Plaintiffs' Exhibit No. 12, the Freed-Eismann set, was drawn under the direction of Mr. Dunmore by a draughtsman. My draughtsman drew out the circuit, and I was present when it was drawn. The diagram was probably made just a week ago and it represents the set as it is today.

So far as I know it is exactly as it was when I saw it. The set has not been disturbed since the time. The set has been with Mr. Dunmore or has been in evidence in the interference situation, involving the Lowell & Dunmore patent and there has been no occasion to make any effort to disturb the circuits.

I certainly have personal knowledge since the set was offered in evidence in the interference, that no one has touched that set. That was probably four months ago.

I think that it is a fair statement that prior to that time, my personal knowledge does not reach with respect to what has been done to the set.

That same situation is not equally true with respect to the diagram, Plaintiffs' Exhibit No. 11.

That particular set has been at my mother's home for the last several years in operating condition so that I know that has not been touched. I have seen it day after day when I visited her home. Mr. Dunmore built it, with that in mind, in addition to exploiting the invention. It was taken to my mother's home probably the middle of 1924.

Since these diagrams were made, I have not personally compared them with the respective sets they purport to represent. I do not know personally whether or not they correctly represent the sets. But it is my understanding, having been drawn out by Mr. Dunmore

and directed to be drawn out by my draughtsmen, that they do.

MR. BARUS: I object to the diagrams on the ground that the witness who offered them does not know whether or not it is the correct diagram of the sets it purports to represent.

THE COURT: Plaintiffs' Exhibits Nos. 11 and 12?

MR. BARUS: Yes.

THE COURT: Do you care to be heard, Mr. Edwards? I think the objection is well taken, unless you show me something that I do not think of.

MR. EDWARDS: I think the witness has said enough to indicate what his memory is as to the sets. I should like to ask him——

THE COURT: If you want to inquire about that, you may, but as it now stands, I think the objection is well taken. You may agree to admit this set of drawings if you want to.

MR. EDWARDS: I shall ask him now a question or later I may question on this line and cure it.

MR. BARUS: I have no obpection to the diagram going in evidence, but I want them in evidence by a witness who can be examined as to what they show, and can give an answer.

RE-DIRECT-EXAMINATION BY MR. EDWARDS (Continued):

MR. BRADY: These diagrams, Plaintiffs' Exhibits Nos. 11 and 12, show the construction of these sets marked for identification Plaintiffs' Exhibits A and B to the best of my recollection, and they conform with my recollection as to the construction.

During my cross-examination, the sets have been 10 or 11 feet in front of me. During all the time of my cross-examination. I did not personally inspect these sets. My testimony during cross-examination was given from my recollection.

MR. EDWARDS: I think, your Honor, that the witness has so good a memory that few of us could equal it.

THE COURT: I agree.

MR. EDWARDS: And that would indicate his correctness as to the diagrams.

THE COURT: I agree with you as that, Mr. Edwards, but I do not know yet whether the witness has gone over this drawing now marked Plaintiffs' Exhibit No. 11, and checked it with his memory to see whether it corresponds in every detail with his recollection. He says he recalls them as he recalls having seen them in December, 1923, and June, 1924, the other one.

THE WITNESS: That is it.

MR. EDWARDS: I will ask him another question on that, if your Honor will permit.

THE COURT: All right.

Q. 194. Will you now check over these diagrams, Plaintiffs' Exhibits Nos. 11 and 12, and see if they correspond to your recollection of the way these sets were constructed at the time you saw them on the dates given in your testimony, and whether or not they embody the details as shown in the sets but shown in these drawings in conventional form?

A. In examining the circuit diagram, Plaintiffs' Exhibit No. 11, I do not find the shunt condenser around the loud speaker system which I thought I recalled as employed in the December 1923 set.

The other elements, however, appear as I remember them, so far as I see. In Plaintiffs' Exhibit No. 12 the elements correspond as I remember them with slight exceptions, and that is, I find a C battery in the detector circuit and in the audio frequency amplifier the C battery is not divided by stages. The characteristic condenser and resistance in shunt connection which I recalled in the grid circuit of the radio frequency amplifier and in the plate circuit of the audio frequency amplifier does not appear here but there are resistances disposed in other parts of the circuit. The vital arrangements as I have recalled do appear in both of the diagrams.

I will mark in pencil the condenser around the telephone in Exhibit No. 11 to which I referred and also

indicate by number the C battery in the detector circuit on Exhibit No. 12 and mark in pencil on Exhibit No. 12 the other features to which I referred and not shown in these drawings.

I will now explain the changes I have made.

In No. 11 I believe my previous testimony stated that there was a C battery in the radio frequency amplifier grid circuit, as I have indicated in ink on the diagram at the place marked G. I believe I also stated that there was a reactance in series in the plate circuit at the point marked R and I further stated that there was a by-pass condenser at the point marked T. I believe all of the other statements are accurate.

In Exhibit 12 I have indicated the shunt condenser and resistance at the point marked S in the grid circuit of the radio frequency amplifier. I have cancelled the C battery in the detector circuit at the point marked Z. I have added a C battery in the second stage of audio frequency amplification as shown at Y and I have shown the condenser and shunt resistance in the output circuit of the radio frequency amplifier at the point marked Z. I believe the other points are accurate. I started to make a correction in the ground lead near the left of the diagram but no correction is necessary in accordance with my recollection.

RE-CROSS-EXAMINATION BY MR. BARUS:

XQ. 197. Mr. Brady, will you please identify on the diagram the location of the battery which is in this set, Plaintiffs' Exhibit B, and which is marked Burgess Radio A.

A. That is a C battery shown in the audio frequency amplifier in Exhibit 12 and marked on Exhibit 12 at Q.

XQ. 198. In the diagram at Q several cells are indicated, whereas the battery seems to be only one cell. Can you explain that, please.

A. As I recall an additional cell which is also shown in the set was connected in series. In fact, you will observe the wire leading to the additional cell connecting in series the dry battery. There are two dry cells in series.

XQ. 199. The other dry cell appears to be of the usual C battery shape. With reference to that battery, since it seems to be the only other battery, will you please state what is the device shown on Exhibit 12 at the point marked "X"?

A. I find on closer inspection that the round battery is the battery at the point X and the other C battery is the C battery at the point marked Q, and these are not connected in series except to the ground connection. The diagram is correct, at the point marked Q in showing several cells since the small C battery is made up of a multiplicity of units. And it is correct in showing it at the point marked X a single cell.

Referring to the diagram Exhibit 11, in the right-hand end at the point marked M is a condenser shunted by a resistance. I can not state the value of that condenser and of that resistance.

I have marked my original exhibit with M so that that can be identified.

MR. BARUS: I think it would save a good deal of time in cross-examining this witness about this drawing if we would look it over and see if we understand it or not. My experts told me it would take some time to trace that out.

THE COURT: Then it is agreeable to both sides to have this witness withdrawn and replaced by another witness on behalf of the plaintiff.

MR. BRADY RECALLED AND CROSS-EXAMINATION BY MR. BARUS RESUMED:

MR. BRADY: The detector in the set which I testified I saw in the Bureau of Standards in 1922 was a crystal detector. That set had C batteries used to bias the grids of both the radio frequency and audio frequency tubes. I do not recall that that set did not have in it any inductance—such as inductance marked 40 in the drawing of Patent No. 1,455,141.

MR. EDWARDS: I understand this is not asking him if there is any part corresponding to that function but merely whether there was a device or coil in that particular circuit at that place.

MR. BARUS: That is it.

MR. BRADY: I saw some of the relays made by the Morkrum Company to which I referred as a licensee under the Dunmore patent. The relays which I saw were operated from alternating current. There were also relays operated from batteries.

XQ. 209. In your testimony respecting Plaintiffs' Exhibit A for identification (now Plaintiffs' Exhibit No. 48), you stated in XQ. 76 that there were two reactances between the two condensers. The diagram, Plaintiffs' Exhibit No. 11, shows only one. Which is correct?

A. Since testifying I have tried to recall the exact situation and in making a search I have found a diagram made at the exact time the set marked for identification A was made. The reason I know it was made at the same time is that the sheet is covered with the same stain which was used to stain that box red and in referring to the diagram I find one reactance.

In comparing that original diagram made at the time of December, 1923, set with Exhibit 11 there appears to be one reactance in the diagram in Exhibit 11 and therefore a correct statement is that there was one reactance in the filter circuit between the two shunt condensers. I may say that the pencil diagram made at the time of the building of the December, 1923 set is made in Mr. Dunmore's handwriting which I identify but I note thereon at least three marks which I identify in my handwriting, one being "three-quarters megohms" and another "three-quarter megohms," and still another marking "three-quarter megohms," being the coupling resistance between the tubes. I checked this diagram at the time to see if it was correct.

XQ. 211. In answer to XQ. 92 you said there was no grid bias on the detector tube of Exhibit A. In Exhibit 11 as originally submitted the detector has a grid return to the top connection of a potentiometer. As amended by you the grid of this tube is biased by a battery marked C. Which is correct?

A. Really what I meant was that there was no extra battery so far as I could recall for the purpose of biasing the grid of the detector tube. The return to the potentiometer is the correct way in which this circuit is wired and was wired originally.

The grid of the third tube from the left in Plaintiffs' Exhibit No. 11 is connected to one side of the potentiometer across the filament. This does not accord with my recollection of Exhibit A.

I find on inspection that that connection should be to the mid point of the potentiometer—in accordance with my recollection—and that appears in the original diagram which I have found. So Exhibit 11 is wrong in that respect.

XQ. 218. You testified that the plate circuit was returned to the leg of the filament as in the Lowell & Dunmore patent in suit, whereas diagram, Plaintiff's Exhibit No. 11, shows it returns to the mid-point of the potentiometer. Which is right?

A. The connection to the mid point appears to be right.

XQ. 219. So that in that respect it is not like the drawing of the patent?

A. (Perusing patent.) You are right.

XQ. 220. You stated that Exhibit B for identification used 201-A type tubes through (XQ. 131). There is now one tube in one of the sockets. Is this the same type of tube that was used in that socket when you saw the set in 1924?

A. Yes. This is the same type of tube, but it appears to be the WX-12. I recall that in this detector tube socket, at various times the UV-201-A tube was used and the WX-12, which was similar to the WD11 of an earlier date. The particular beauty of this tube was, as I recall it, the low voltage requirement for the filament and the fact that the detector tube in itself operated for the elimination of hum, so that the detector system would be a hum elimination system.

XQ. 221. Now, do you know whether the set was operated with tubes of the type of WX-12, in each socket or only in the detector socket?

A. Only in the detector socket.

XQ. 222. Do you know whether this WX tube was used in the detector socket at the time of the demonstration to Mr. Freed?

A. Yes, and I do recall that the tubes were changed in the socket to determine the different degree of hum and the UV-201-A tube was used in the detector socket, and it was shown with this type of WX-12 tube, that the degree of hum would be reduced by using a particular type of tube in the detector socket.

XQ. 223. The hum was not eliminated, it was only reduced?

A. To all practical purposes the hum was eliminated as far as practical purposes were concerned. I recall the Western Electric loudspeaker of the horn type, used in the June 21, 1924 demonstration to Mr. Freed, and in that speaker good quality reception came in, with no noticeable disturbance and disagreeable disturbance from the hum.

XQ. 224. In XQs. 144 and 145 and 149, you stated that the condenser and resistance there referred to were in the plate circuit of all of the tubes. As you corrected Exhibit 12, you showed such condenser and resistance only in the plate circuit of the last audio frequency tubes. Which is correct?

A. Will you let me have your Exhibit No. 12, please? My correction should have been to dispose the shunting condenser and resistance in the lead immediately adjacent and parallel to the lead in it which now appears, and I will be glad to make the proper correction in red, so that the device including the shunt condenser and resistance is in the common lead to the plate return circuit. I have marked the correct insertion by the letter O.

XQ. 225. As you first corrected it, it was located in the same position as in the drawing of patent No. 1,455,141. As you have now corrected it, it is not so located; is that right?

XQ. 226. In Exhibit B (now Plaintiffs' Exhibits 49 and 49-A), according to your testimony, XQs. 159 and 160, the plate circuit returns were made to one side of the potentiometer; as shown in Plaintiffs' Exhibit No. 12, the plate returns are connected to the mid-point tap on the potentiometer. Which is correct?

A. The correct connection is to the mid-point taps on the potentiometer. In that respect the connection differs

from the connection of the plate return as shown in the drawing of Patent No. 1,455,141.

XQ. 228. In your answer to Q. 194, you stated "That there are resistances disposed in other parts of the circuit," of Plaintiffs' Exhibit No. 12. Please point them out and mark them.

A. I have the original. The resistances to which I had reference are shown near the center of the diagram in Plaintiffs' Exhibit No. 12, which I now mark by the letters A and B in red, and also the resistances shown at C and D in red. I might point out in the neutrodyne receiver the position of the resistances A and B. These resistances are variable in character and were placed behind the front panel of the set, and on opposite sides of the center control condenser.

I am still the patent attorney for Lowell and Dunmore. I have no contingent interest whatever in the outcome of this litigation.

I have not the slightest present or contingent interest in the outcome of the interferences in which certain claims of this patent are involved and to which I referred in XQ. 179.

I did not attempt directly to interest the Dubilier Company in the Dunmore and Lowell patents. The way in which that situation developed, I do recall, however. I have a clear recollection of those events to the extent that condensers were necessary and the Dubilier Company being a source of supply.

XQ. 235. Do you know whether the Dubilier Company ever made any alternating current set?

A. Yes, sir.

XQ. 236. Did they or did they not?

A. The Dubilier Company manufactured the Super Ducon, which was an apparatus for eliminating batteries and operating a radio receiver by supplying the B potential for the election tubes in the radio receiver. So far as I know it was a B eliminator. In so far as I know that is the only type of apparatus for use with alternating current which they made, radio apparatus.

In the Navy during the war, I was in charge of purchases and shipments to ship and store stations of radio apparatus for operation for war purposes. The Navy bought a considerable amount of apparatus from different manufacturers and I had to see that that apparatus was on hand when required.

MR. EDWARDS: *I will offer in evidence the diagram* produced by the witness during his cross-examination.

MR. BARUS: I have no other objection.

(Received in evidence and marked "Plaintiffs' Exhibit No. 50." *See Exhibits, Volume III, page 187.*)

RE-DIRECT EXAMINATION BY MR. EDWARDS:

MR. BRADY: I was asked during the direct examination if I could produce a copy of the license with the Radio Instrument Company. I have found a copy and produce the same.

MR. EDWARDS: I will offer in evidence the copy produced by the witness of the license to the Radio Instrument Company.

(Received in evidence and marked "Plaintiffs' Exhibit No. 51." *See Exhibits, Volume III, page 189.*)

I have a letter from the Westinghouse Company dated July 23, 1923, at which time this patent was called to the attention of the Westinghouse Electric & Manufacturing Company together with the reply of the company under date of July 31, 1923, which I produce.

MR. EDWARDS: I will offer these copies in evidence.

(Received in evidence and marked "Plaintiffs' Exhibits Nos. 52 and 52-A." *See Exhibits, Volume III, pages 193-195.*)

THE COURT: The letters are admitted without the penciled notes thereon. The General Electric Company's letter. The General Electric Company letter Exhibit No. 9 of yesterday is likewise admitted without the notes penciled thereon.

ROY E. SWEENEY.

ROY E. SWEENEY, called as a witness on behalf of the plaintiff, being duly sworn, testified as follows:

DIRECT EXAMINATION BY MR. EDWARDS:

MR. SWEENEY: I am secretary and treasurer of the Dubilier Condenser Corporation. I have a list of the licenses granted under one or more of the patents in suit and a memorandum of the dates of these licenses and the amounts of money received from the licenses under them.

MR. EDWARDS: I may say to your Honor that Mr. Neave and I will agree on putting in either the licenses themselves or a statement concerning them later.

MR. SWEENEY: The royalties received from our licensees as shown by our records are as follows: During 1926, we received from the Argus Radio Corporation, contract dated June 8, 1926, $1000.

We have a contract with the Elkon Works dated September 15, 1926, from whom we received $1000.

We have a contract with the Fansteel Products Company July 15, 1926 and we have received $5000.

During the year 1927 we have received from Briggs & Stratton, contract dated January 1, 1928, the sum of $6000. Fansteel Products Company paid us the second year's royalties of $5,000. Grigsby, Grunow & Hinds Company under our contract dated February 16, 1927, that first contract being on our Patent No. 1,455,141, and our contract dated October 4, 1927 on our Patent No. 1,635,117, paid the sum of $5000.

We have a contract with the Willard Storage Battery Company dated January 19, 1927 from which we received $5000.

During 1928 we received $835 in royalties from the Elkon Works, $5000 from the Fansteel Products Company $7500 from Grigsby, Grunow, Hinds Company, on the previous mentioned contract, also $1875 from Grigsby, Grunow, Hinds Company on a contract dated November 18, 1927, covering our Patent No. 1,606,212, and $7500

from the Willard Storage Battery Company from our contract mentioned previously.

In addition to the ones just mentioned we have as licensees the Brandes Products Corporation and the Philadelphia Storage Battery Company. I have no personal knowledge as to what royalties they paid.

I do not know what royalties the Morkrum Company have paid. There are none paid to the Dubilier Company direct. The grand total of the royalties received by us are $50,710.

CROSS-EXAMINATION BY MR. BARUS:

MR. SWEENEY: With reference to the license of the Philadelphia Storage Battery Company, I have no definite knowledge what device that company made if any under the license.

With reference to the license with Elkon Works, I have no knowledge of what that company made under the license if anything.

With reference to the license to the Morkrum Company, I do not know what device that company made if any under the license.

With reference to the license to Argus Radio Corporation, I do not know what device if any that corporation has made under the license.

In the case of the Fansteel Company, I do not know what device that company made under the license. I am not familiar with the details of their product.

With reference to the Grigsby, Grunow, Hinds Company, I do not know what that company made under the license.

With reference to the Brandes Products Company license, I have no knowledge of what that company made under the license.

With reference to the Briggs & Stratton Company license, I do not know what that company made.

With reference to the Willard Storage Battery Company license, I do not know what that company made.

I have no definite knowledge whether the payment made under the Philadelphia Storage Battery license was in excess of a minimum royalty provision.

The Elkon Works have been paying royalties on the units produced.

And with reference to the Argus Radio Corporation, they also pay on the number of units produced.

In the case of the Argus the amount paid is the original amount paid on the execution of the agreement. No further payments have been made.

As to the Elkon Works there have been further payments on Elkon since the execution of the agreement. I do not know whether the amount paid by Elkon is in excess of the minimum amount provided by the contract.

The Fansteel Products Company have paid the amount specified in their contract.

XQ. 22. Was that payment on devices produced or was it to be paid anyway?

A. That is the sum called for in the contract.

XQ. 23. Regardless of how many devices were produced under the contract?

A. I cannot state definitely.

With reference to the Grigsby, Grunow, Hinds license, the payments made under that license were in excess of the minimum royalty provision in the license.

We have three contracts with Grigsby, Grunow, Hinds Company, each covering a separate patent and in my previous testimony I gave the patent numbers. If you wish them again they are our contract dated February 16, 1927, covers Patent No. 1,455,141, and our contract dated October 4, 1927, covers Patent No. 1,635,117 and our contract dated November 18, 1927, covers Patent No. 1,606,212.

I do not know whether the amount paid by the Brandes Products Company was in excess of the minimum provision of the contract since I have no definite knowledge as to what was paid direct to the inventors.

The Briggs, Stratton Company paid the original amount required by the contract on the execution of the agreement with them. I understand they later went out of that line of business. I do not believe it made any difference under the contract with Briggs & Stratton Company whether they made any more devices or not, but I am not sure of that.

With reference to the Willard Storage Battery Company license, the amount paid under that license exceeded the minimum provision.

I know that the several licensees to whom I have referred, paid the proper amount of royalty, because the licensees under our contracts have paid the amounts stipulated in the contract. In one or two cases, however, the Argus Radio Corporation and the Elkon Works, these amounts are paid based on the units produced, and we have a report from these companies showing the number of units produced, together with their check for the royalty.

I do not have the information to show what were those units in the case of the Elkton Company and the Argus Radio Company.

MR. EDWARDS: I will offer in evidence the correspondence file between Mr. Brady and the Westinghouse Electric & Manufacturing Company and the Radio Corporation. I understand that it is admitted by counsel that the letters were written on or about the dates borne by them, by the respective parties whose names are signed to the correspondence. I may say this is upon the point of showing notice to the defendants of the patents in suit.

MR. BARUS: I do not believe it is worth objecting to.

THE COURT: You agree to the suggestion of Mr. Edward and the documents are admitted.

(Received in evidence and marked "Plaintiffs' Exhibits Nos. 13, 13-A to 13-F." *See Exhibits, Volume III; pages 81, 82, 83, 84, 85, 86, 87.*)

JOSEPH D. R. FREED.

JOSEPH D. R. FREED, called as a witness on behalf of the plaintiff being duly sworn, testified as follows:

DIRECT EXAMINATION BY MR. EDWARDS:

MR. FREED: My address is 912 Fifth Avenue, New York City, and I am president of the Freed-Eisemann Radio Corporation. The business of that corporation is manufacturing of radio apparatus. It has been in business since about 1921. I was the founder of that business and have been connected with it since its inception.

In 1921 or 1922 there were broadcasting stations in operation. As I recall the first broadcasting stations started operation in the fall of 1921.

I remember station KDKA of Pittsburgh and station WJZ, which was then located at Newark, New Jersey.

I cannot give you an accurate figure of the volume or extent of business done by the Freed-Eisemann Company, but I should judge that during 1921 and 1922 we made at least 50,000 radio sets.

There were other manufacturers manufacturing radio receiving sets at that time. None of those sets were operated from alternating current, as I recall.

The first sets we made were so-called crystal detector sets which required no battery of any kind and after that we brought out radio sets which operated from storage batteries and dry batteries.

Concerning the size and standing of the Freed-Eisemann Company today, I should judge that we do about three and a half to four million dollars worth of business annually. I do not know just how we run in size with the other radio manufacturers.

It has been a part of my work to keep in touch with the new types of receiving sets or apparatus put upon the market or brought out in any way by other people.

I first heard of an alternating current operated radio receiver during the early part of 1924, if my memory serves me, the spring of 1924.

The set which was called to my attention was one which had been made by Mr. Dunmore, who was at that time with the Bureau of Standards.

I did the following about it: Mr. Brady, who at that time was one of our patent lawyers, called my attention to the fact that one of his friends had built a radio set which would operate from the alternating current supply. Mr. Brady told me about it and asked me whether I was sufficiently interested in hearing a demonstration of this set. I told him I was. Mr. Brady said he would arrange for an appointment at which time I could see and hear the radio set. I made such an appointment and saw the set in Mr. Dunmore's home and I fix the time as sometime in June, 1924.

Looking at the sets before me on the chairs, I can identify among those sets the one similar to, or the same set, as shown me.

This is the set marked for identification Plaintiffs' Exhibit B, which I believe I saw and heard at Mr. Dunmore's home.

The operation of that set at that time was such as to impress me with the value of a device of that kind. I told Mr. Dunmore that I thought the demonstration was a satisfactory one considering the fact that he had just used the materials which were available and had not really had a chance to do a thorough engineering development job, and I suggested that he send the radio set up to the factory where I would have an opportunity to make further tests on the set in our own premises.

Personally, after that, I went abroad in the middle of July, 1924, after I had asked Mr. Dunmore to send the set up to the factory. Upon my return I learned from my partner that Mr. Dunmore had sent the set up to the factory but that Mr. Brady or Mr. Dunmore wanted the set for some other work and had requested its return. I was told by Mr. Eisemann that he had returned the set either to Mr. Lowell or Mr. Dunmore.

My company did not take up the manufacture of that set at that time for the reason that we investigated the patent situation covering the broadcast receivers in general and we thought at that time that we might run into

some complications with patents covering filter circuits and C bias circuits and we felt that we would rather not take up the manufacture of that alternating current set at that time.

CROSS-EXAMINATION BY MR. BARUS:

MR. FREED: Our company began to make sets of the type of Exhibit B for Identification in the summer of 1923, about that time. That is, of course, such sets without alternating current operation. The generic name for that type of circuit used in that set is tuned radio-frequency. That particular type is often referred to as a neutrodyne.

I believe ours was one of the first neutrodyne sets, but I can not say with certainty. I have no present recollection of any tuned radio-frequency set that was on the market before our set.

My opinion is the tuned radio-frequency set had such great development was because of the application of the neutrodyne principle.

There was no substantial demand on the market for so-called radio frequency sets in which the various radio frequency stages were connected by untuned transformer circuits.

The reason for that was the number of broadcasting stations was increasing very rapidly and the demand was for a radio set which could easily separate the broadcasting stations.

During the year 1923, there were some crystal sets on the market. There were some regenerative action tube receivers. There was an increasing number of neutrodyne receivers coming on the market at that time.

The situation in 1924 was, as I recall, the regenerative receivers were losing their vogue, and the demand was more and more for the tuned radio frequency receivers of the neutrodyne type.

As to what was the first alternating current operated receiving set on the market that came to my attention, that is, the first one which was sold and advertised to the public, I will have to think for a few moments. I think

I once saw a set advertised made by the Argus Company; I believe they had an alternating current set.

I do not know what became of that set. I think the company is still doing a small business. It did not make any substantial impression on the market.

The first alternating current operated set that made any substantial impression on the market, I believe was one of the sets put out by the Radio Corporation of America, as I recall at this time.

I do not just recall the model number. I think it was a tuned radio frequency receiver for alternating current operation. I am not sure of the number.

As I recall it came out in 1926. It may be 1927. Either the end of 1926 or the beginning of 1927.

I believe a super-heterodyne set came out sooner. I believe there was a super-heterodyne set brought out by the Radio Corporation of America, in which dry battery tubes were used. I think that preceded the tuned frequency radio set.

The filaments in that set were not excited by alternating current in the sense of raw alternating current. As I recall it, they were excited by direct current.

The quality of reproduction obtained from a magnetic type of loudspeaker is not dependent to a considerable extent upon the power which is available to operate the speaker.

I would say the volume output of the speaker is dependent on the power, but not the quality.

The reason why so-called power amplifier tubes came into use, in my opinion, I think it was a natural development. People wanted to get louder volume from their radio sets, and the natural thing to do was to deliver a vacuum tube that would distribute a larger output to the loud speaker. That had nothing to do with quality, as well as power, only incidentally. A well-designed speaker will deliver a good quality whether the signal is loud or weak.

With reference to the so-called power tube, there have been power tubes made and used for several years; even

before broadcasting, those tubes were used in various telephone repeater circuits and in long distance lines. They have been in use for some time.

There are two generally accepted types of power tubes. There is a so-called 171 type which is a low-power amplifier tube, and the 210 or 250 type tube. I believe that the 171 type power amplifier tube was brought out some time in 1926, as I recall. That is a low-power amplifier tube. The first neutrodyne sets we built we did not use power tubes because they were not available at the time.

We started to use the 171 type tube just as soon as they were put on the market. I think we were one of the first companies to use them. I do not recall the exact date.

We did, in fact, increase the voltage supply for those power tubes as compared with the voltage supply for the other tubes, and that was the practice with respect to power tubes in all the sets that I know of where it was used.

We are making alternating current operated receiving sets today. We have been making them since about May, 1927.

We have not a license from the plaintiffs in this case. We are making today several types of sets.

Concerning the alternating current receiving set, the most popular set which we make utilizes the type CX-326, C-327, C-380 and C-371A tubes or the equivalent Radio Corporation tubes. That is our more popular type set. Those are all so-called alternating current tubes.

RE-DIRECT EXAMINATION BY MR. EDWARDS:

MR. FREED: We had some discussion with the Dubilier Company regarding the possibility of license under these Lowell & Dunmore patents. We are not a licensee at the present time.

I recall that the Western Electric Company had a power amplifier with power tubes as early as about 1927.

RDQ. 84. You were asked something about the first set put upon the market operated by alternating current which made a substantial impression upon the art, and I believe you at that time mentioned the Radio Corporation

set. In order to get some idea as to what was meant by an impression, in what way you meant making a substantial impression, I would like to ask you whether that means in advertising or sales or volume or quality of instrument or what? What was it that made this impression?

A. A large amount of money was spent in advertising this new type of set and that created a widespread interest in the radio trade itself. I do not believe that the average consumer was as much impressed as was the radio trade. The reason for it is that the set was a very expensive set and it had not been entirely perfected and it still had certain imperfections, and so the consumers generally were not as greatly impressed as was the radio trade because it was something new to them. It was a set that they had never seen before.

By the Court:

Q 85. Do you happen to know whether that is the Radiola 28?

A. I believe that is the number.

By Mr. Edwards:

Mr. Freed: Up to that time, the Radio Corporation confined itself to direct current operated sets, so far as I know, that is, so far as the general market was concerned.

According to the information or knowledge I have, the Radio Corporation has very large distribution for its set. The volume in the direct current sets from 1921 up to 1925, the latter part of 1925, the time the alternating current sets came out was, that practically all of the sets sold up to that time were storage battery operated types.

The volume of business of the Radio Corporation in receiving sets was a very large business.

Mr. Edwards: That is all.

(Witness excused.)

Mr. Edwards: I will offer in evidence a photograph of the receiving set which was marked for identification "Plaintiffs' Exhibit B." The photograph I think speaks for itself.

(Received in evidence and marked "Plaintiffs' Exhibit No. 46." *See Exhibits, Volume III, page 181.*)

MR. EDWARDS: I will offer in evidence a photograph of the receiving set which has been referred to as the portable set and marked for identification as "Plaintiffs' Exhibit A." This photograph also I believe speaks for itself.

(Received in evidence and marked "Plaintiffs' Exhibit No. 47." *See Exhibits, Volume III, page 183.*)

MR. EDWARDS: I will also offer in evidence the receiving set, which was marked for identification "Plaintiffs' Exhibit A."

(Received in evidence and marked "Plaintiffs' Exhibit No. 48.")

MR. EDWARDS: And also the receiving set, which was marked for identification "Plaintiffs' Exhibit B," which includes two portions, the receiving set and the rectifying unit.

(Received in evidence and marked "Plaintiffs' Exhibits Nos. 49 and 49-A.")

ALEXANDER ERNEST REOCH.

ALEXANDER ERNEST REOCH, called as a witness on behalf of the defendant, being first duly sworn, testified as follows:

DIRECT EXAMINATION BY MR. BARUS:

MR. REOCH: My residence is East Orange, New Jersey; my occupation is that of a radio engineer, at present in the position of manager of the Production and Service Department of the Radio Corporation of America.

I have held that position since January 1, 1926.

My previous experience in radio was as follows: From 1902 to 1905 as a radio engineer in the employ of the British Marconi Company. From 1905 to 1917 as the radio engineer in the employ of the Marconi Company of Canada, part of which time I acted as chief engineer

of that company. From 1917 to 1919 as a radio engineer in the employ of the American Marconi Company. From 1919 to the present date I have been in the employ of the Radio Corporation.

Prior to January 1, 1926, I was engaged in the communications branch of the business, latterly as assistant chief communication engineer.

My experience has covered design, construction, installation, and operation of radio telegraph and radio telephone equipment, the former in many parts of the world. I have also had some experience in the manufacture of the apparatus for these stations.

When I assumed my present position as manager of the Production and Service Department on January 1, 1926, the following radio sets were then being marketed by the Radio Corporation:

Beginning with the smallest set there was a Radiola 3-A. This was a set consisting of regenerative detector and two stages of audio-frequency amplification, the last of which two stages used two tubes.

There was a Radiola 20 which was a tuned radio-frequency type of receiver using two stages of radio-frequency amplification, one detector and two stages of audio-frequency amplification.

There was a Radiola 25 which was a six-tube superheterodyne set.

There was a Radiola 28 which was an eight-tube superheterodyne set. There was 104 loud speaker which was an electrodynamic type of loud speaker equipped also in the same unit with the power amplifier and a rectifier and filter system for supplying power to the loud speaker and the power amplifier from the house alternating current supply.

There was 100 loud speaker which was a plain magnetic type of loud speaker. There was a unirectron which was a rectifier and filter system supplying a single stage of power amplification which could be driven from the house alternating current lighting circuit and could be used with any set that would drive a magnetic type of loud speaker.

There was a duo-rectron which was a rectifier and filter system used to convert the alternating current supply to a supply suitable for the B circuits and it could be used with any set and was generally known as a B eliminator.

In addition to which there was a Radiola 30, which was substantially a combination of Radiola 28 and the power portion of the 104 loud speaker but with a different type of loud speaker to that which was used in the 104. The Radiola 30 used the magnetic type of loud speaker. This set could be used directly from the alternating current house lighting circuit.

The Radiola 25 and 28 were designed for battery operation, but they could be used in conjunction with the 104 loud speaker so that they would take their power supply from the house lighting circuit instead of from batteries. When used as battery sets the tubes had their filaments connected in parallel and when used for complete alternating current operation subsidiary equipment had to be used with the set to change the parallel system of connection of the filaments into a series system of connection.

When I assumed my position on January 1, 1926, I had occasion to look into the question of how many of these speakers had been sold prior to that date. Also as to how many Radiola 25 and 28 for battery operation had been sold prior to that date, and also as to how many alternating current packages for converting the 25 and 28 super-heterodyne for use with the 104 loud speaker had been sold prior to that date.

I can state those figures approximately as follows: 104 loud speakers, approximately 5000. Radiola 25, approximately 50,000. Radiola 28, approximately 30,000. Subsidiary equipment for changing the Radiola 25 for complete alternating current operation about 200. Subsidiary equipment for changing Radiola 28 for complete alternating current operation about 400.

The largest number of sets in demand by the public on January 1, 1926, were of the tuned radio-frequency type.

The majority were operated by means of storage batteries for the filament supply and dry batteries for the B

circuit supply. Some used dry batteries for the filament supply also but they would be the minority.

There were a number of B eliminators such as duo-rectron on the market at that time.

The type of tube which the Radiola 20 employs is the tube known as the UX-199. This was a tube that had been specifically designed for battery operation; that is, for dry battery supply to the filament. The filament was very small and required only about 6/100th of an ampere to heat it.

The same tube, the UX-199 was employed in the super-heterodynes 25 and 28. A power tube was employed in the Radiola 20. In the last audio stage UX-120 tube was used, and this tube was of somewhat similar type to the 199. It was designed for dry battery operation of the filament, but the filament required about twice the amount of current required for the filament of the UX-199 tube.

A power amplifier tube was used also in the Radiolas 25 and 28 as designed for battery operation, it was the same UX-120 tube and it was used in the output stage in both those sets.

I believe the plate voltage required for the operation of this power tube was 135 volts. That is approximately correct.

That was more voltage than was applied to the other tubes used in the Radiola 20 and in the super-heterodynes 25 and 28, as designed for battery operation.

I cannot specify exactly the voltage used on each of the tubes in the Radiola 20. The voltage would not be in excess of 90 volts, and in the case of the detector tube, I believe it was specifically low.

In the Radiola 20 there were tubes, some of the same character and some of a different character, which required different voltages to be applied to their plate circuits. The same voltage was applied to the filaments of all the tubes. The current in the filaments was different in the case of the power output tube.

In Radiolas 25 and 28, there are 199 tubes, two used as detectors, one as oscillator, the others as amplifiers, and different voltages will be used on the plate circuits for

the three different purposes, as a general rule. I should say that in no case were the voltages supplied for the 199 tubes to exceed 90 volts.

When the Radiolas 25 and 28 were adapted by the A. C. package for operation with the 104 loud speaker, the power tube in the 25 and 28 sets as they were designed for battery operation was taken out.

The power tube of the 104 loud speaker was substituted which was a very much higher power unit.

That was also true in the case of Radiola 30.

My commercial experience with Radiolas 25 and 28, adapted for operation with the 104 loud speaker was that we purchased and sold a large number of Radiola 28 for use in conjunction with the 104 loud speaker. We had considerable trouble in service with those sets, due to the complicated nature of the set and the frailty of the tubes used in the set.

I took part in practically all deliberations as to what sets should be made with regard to the latter half of the year 1926 and early in 1927, which deliberations resulted in decisions as to what sets should be made during that period.

My duties in connection with new sets consist in conferring with representatives of other departments of the Radio Corporation, and representatives from the manufacturers who will make our sets for us as to what will be the best type of set to produce at a certain time. Decisions are reached at these conferences as to what will be the sets.

Next, my duty is to secure quotations, prices, delivery dates and negotiate production schedules with manufacturers and to recommend to the executive officers of the Radio Corporation the placing of the orders for the production of these materials.

The following sets were put into production in the early spring of 1927 and in the fall of 1926.

In the fall of 1926 I do not recollect any important orders for production being placed. In the spring of 1927 orders were placed for the production of the following sets: Radiola 16, Radiola 17, Radiola 30A, Radiola 32.

My recollection is that orders were placed for the production of Radiola 17 in April, 1927.

I was not personally a member of the board or committee, or whatever it was, which decided as to what parts should be put into the Radiola 17.

That was decided by the manufacturers and the designing engineers. I understand that you do not refer to the general aspects of Radiola, namely, as to whether it should be an alternating current or a battery set.

I was a member of the committee that decided whether it should be alternating current or battery set.

Radiola 16 was a tuned radio frequency type of receiver, using three stages of radio frequency amplification, a detector stage, and two stages of audio frequency amplification. It uses five 201A and one 112 power output tube. It was a battery operated set.

The power output tube required somewhat higher voltage for the plate circuit than the other tubes and the same voltage, but somewhat higher current for the filament circuit than the other tubes.

Radiola 16 went on the market about July, 1927.

I produce a copy of the service notes showing a diagram of Radiola 16.

MR. BARUS: Defendant offers in evidence the service notes of Radiola 16.

(Received in evidence and marked "Defendant's Exhibit No. 11." *See Exhibits, Volume IV, page 675.*)

MR. REOCH: Radiola 17 went on the market about August, 1927. About 100,000 Radiola 17 sets were sold in the balance of the year 1927.

The UX-226 and UY-227 tubes were placed on the market about May, 1927. About two million UX-226 tubes and about 227,000 UY-227 tubes respectively, were sold in the balance of the year 1927.

We were not able to fill orders for UY-227 tubes promptly in 1927. I was unable to keep production up to demand until the latter part of the year, about Novem-

ber first, probably sometime in October, towards the end of October.

I can account for the difference between the number of Radiola 17 sets sold and the number of UY-227 tubes sold, in view of the fact that only one UY-227 tube is used in each Radiola 17. The reason is that there were a large number of other alternating current sets placed on the market during the latter half of 1927, which used the UY-227 tubes.

The experience of the service department with respect to UX-226 and UY-227 tubes in 1927 was that the service department was called upon to make few replacements in the case of UX-226 tubes, but a comparatively large number of replacements had to be made in the case of UY-227 tubes.

The R. C. A. placed on the market new alternating current operated sets in 1928. The Radiola 18, a tuned radio frequency set, was placed on the market in April, 1928; the Radiola 60, in August, 1928, the Radiola 62, in September, 1928, the Radiola 64, in October, 1928. The Radiola 60, 62 and 64 are superheterodyne sets, alternating current operated superheterodyne sets.

I produce copies of the service notes for Radiolas 18 and 60.

MR. BARUS: Defendant offers in evidence service notes for Radiola 18.

(Received in evidence and marked "Defendant's Exhibit No. 12." *See Exhibits, Volume IV, page 695.*)

MR. BARUS: Defendant offers in evidence service notes for Radiola 60.

(Received in evidence and marked "Defendant's Exhibit No. 13." *See Exhibits, Volume IV, page 719.*)

MR. REOCH: The same tubes were used in the Radiola 18 as were used in the Radiola 17. The tubes were used in the Radiola 60 were the UX-280 rectifier tube, seven UY-227 tubes and one UX-171A power output tube. The filaments of these tubes in Radiola 60 were lighted by alternating current.

Radiola 62 was like the Radiola 60 except that Radiola 60 was a table model, while Radiola 62 was housed in a console cabinet together with an electro-dynamic type of loud speaker. Radiola 64 was also similar to Radiola 60 but used a higher power rectifier and output tubes. Radiola 64 was also housed in a console cabinet together with an electro-dynamic type of loud speaker, and the 64 was also equipped with an automatic volume control arrangement.

The Radiolas 18, 60, 62 and 64 did not have adjustable potentiometers bridged across the filament supply system. Fixed type resistors were used in place of adjustable potentiometers.

In the case of the Radiola 18, the schematic diagram in the service notes indicates that variable resistances are used. The wiring diagram, Fig. 11, page 18, in the same notes, shows that the center tap resistor units are fixed. The latter is correct.

In the case of Radiola 60, the schematic diagram in the service notes shows that the adjustable resistances are used. The wiring diagram, Fig. 18, page 24, of the same notes, shows that the center tap resistors are fixed. The latter is correct.

CROSS-EXAMINATION BY MR. EDWARDS:

MR. REOCH: I did not look up the figures to see how many battery operated radio receivers of all types had been sold by the Radio Corporation prior to January 1, 1926, the time when I entered my present position.

I will endeavor to ascertain and report here at the next session the number of each of the types of battery operated sets sold by the Radio Corporation during the years 1925, 1926 and 1927 including the types 25 and 28, which I believe I testified were at times sold as battery operated sets.

The Radiola 16 was put on the market first in July, 1927, and during 1927 about forty or fifty thousand were sold. About 100,000 of the Radiola 17 were sold during 1927.

Without stating in a definite way, I can give an approximate date when Radiolas 25 and 28 were put out as battery operated sets, viz., in August or September, there-

abouts, 1925. That is prior to my connection with the department, but I can produce that information from other information I have received after January 1, 1926.

When those sets were put out they did not contain tubes, all of which were alike, that is, of the same type of tubes.

When battery operated, the tubes of the receiving set were not all UV-199 tubes for UX-199 tubes. There was a UX-120 tube.

When the Radiola 25 was first put out, I can not say definitely that it was not sold without any UX-120 tube, but I think not.

Before the Radiola 25 was put out the company put out the superheterodyne type of receiver. That receiver contained all UV-199 tubes, I believe.

When the company brought out the UX-120 tube, the power tube, it furnished an adapter to go with those sets in order to enable the 120 tube to be used with the UV-199 tube.

That adapter connected up some additional batteries so as to enable the user to add some more batteries to give him a higher plate voltage and a C battery, and so forth.

Then when later the Radiola 25 and 28 came out, they embodied the power tube as a part of the equipment with the necessary voltages. I believe that was so from the outset with the 25 and 28. The 25 used five UX-199 and one UX-120. The superheterodyne set which immediately preceded the 28 and 25 was the one which had the tubes all alike.

In connection with the super-heterodyne set they sold the UX-120 tube and an adapter to enable the user to annex the batteries, and so forth.

When the 25 and 28 came out it embodied the UX-120 tube in the same receiving set or case along with the UV-199 or UX-199 as the case may be.

I was with the Radio Corporation during 1921.

I do not recall that about that time the Radio Corporation offered for sale parts for a one-tube receiving

set operated by alternating current. They may have done so without my having any knowledge of it.

This copy of an advertisement does not refresh my recollection. I cannot say that I have ever seen this advertisement before.

I will make inquiry between now and the next session and endeavor to bring here the instruction book and catalogue referred to in this advertisement which I have just been shown and which is a copy or purports to be a copy of an advertisement appearing on page 600 of *Science and Invention* for November, 1921.

I will also endeavor to ascertain how many of those sets were sold by the Radio Corporation and the period during which they were sold, that is, if the sale extended over more than one year, how many were sold during each year, but if this information is required by next Monday, I am afraid it will be impossible to do that.

JOHN H. DELLINGER.

JOHN DELLINGER, called as a witness on behalf of the defendant, having been duly sworn, testified as follows:

DIRECT EXAMINATION BY MR. BARUS:

MR. DELLINGER: My residence is Washington, D. C. I am chief of the Radio Laboratory of the United States Bureau of Standards.

I have been connected with the radio section of the Bureau of Standards since its formation. It was organized as a definite section in about 1917, and after some changes of organization, it was finally consolidated as a single section of which I was the chief, on February 1, 1921, and I have been the chief since that time.

My duties as chief of the radio section were to supervise and direct the work of the section.

I assign the work to be done by the various men. I supervise the incoming and outgoing correspondence and direct the preparation and submission for official issuance of publications.

The following have been the directors of the Bureau of Standards during my connection with it.

Dr. S. W. Stratton was the director from the bureau's beginning in 1901 to about December, 1922, when he resigned to become president of the Massachusetts Institute of Technology. After a short interregnum, when there was an acting director, he was succeeded by Dr. G. K. Burgess, who has been director until now.

I know Francis W. Dunmore and Percival D. Lowell. They have been members of the radio section.

Mr. Lowell was a member from sometime prior to 1916, I am not sure of the year, until sometime in July, 1922. Mr. Dunmore was a member from about 1917 up to the present.

There were no written contracts concerning the employment of either Francis W. Dunmore or Percival D. Lowell.

There are no written contracts for any members of the bureau. They are appointed through the civil service routine and are simply given a notice of appointment, but no contract as to conditions of employment.

Referring to the article shown me in the *Journal of the American Institute of Electrical Engineers,* at page 310, by Francis W. Dunmore, I am familiar with the device and work described in that article.

It was done during 1921, under my direction.

There is a written record of the work which Mr. Dunmore did in connection with the development of the device described in this article.

A laboratory note book was kept by Mr. Dunmore. He also prepared practically daily brief reports which were submitted weekly, and also monthly reports.

There are rules of the bureau or the section with respect to monthly reports, weekly reports, and laboratory note books such as I have referred to.

Such rules were in writing. I have a copy of such rules. (Producing paper.)

Referring first to the document which I have produced in blueprint form entitled "Notes on Procedure in Radio Laboratory," I will explain briefly what this document is.

This document is a set of notes of the nature of instructions which were prepared by me and given to each of the group chiefs, that is, the chiefs of the major subdivisions of the radio section, giving information as to proper procedure on such questions as organization; the program of work; the preparation of reports, and preparation of publications and correspondence and related matters.

Referring to the document which I have produced entitled "Information for Members of the Radio Laboratory," I have marked it "Only Partial Copy." I do not have a complete copy of these regulations with me.

That is a partial copy of a set of instructions which I gave each member of the laboratory as he joined the bureau. It is dated 1920, and I have copied for present purposes for the purpose of refreshing my memory or any other use here, such portions as seemed to me might be pertinent, because there is only one copy extant of that date, namely, the official copy of the Bureau of Standards.

I will furnish a complete copy certified by the Secretary of Commerce, of the whole of this report, as on file in the Bureau of Standards, if requested to do so.

MR. BARUS: I ask that the documents referred to by the witness be marked Defendant's Exhibits for Identification B and C.

(Received and marked "Defendant's Exhibits B and C for Identification.")

MR. DELLINGER: I am shown a document certified by the Secretary of Commerce as a true copy of the original records specified in the attached list on file in the Bureau of Standards. These certified copies include the monthly, weekly reports of Dunmore and the laboratory notebook of Dunmore to which I referred.

MR. BARUS: The defendant offers in evidence as its Defendant's Exhibit 1 the weekly reports, monthly reports and laboratory notebooks of Dunmore, and I would ask permission to use a photostat copy in place of the certified copies.

MR. BOYCE: May I ask during what period of time and for what purpose these are offered?

MR. BARUS: This exhibit includes the monthly reports of F. W. Dunmore from July, 1921, to July 15, 1922. It includes the weekly report cards of F. W. Dunmore from August 1, 1921 to August 5, 1922, except cards for October 10th to 15, 1921. I may say that I do not know where that is. It was asked for. All were asked for but that one is evidently lost. The laboratory notebook of Dunmore, pages 36 to 73 inclusive covers substantially the same date.

MR. BOYCE: And for what purpose?

MR. BARUS: These notebooks and reports are offered in evidence for several purposes. In the first place as admissions by the plaintiff concerning the invention which they allege they have made. That is applicable not only to this defense but to the merits. In the second place, as showing the time and manner in which the work described in those reports was done and as being admissions of the plaintiffs for that purpose.

THE COURT: That it was done in the Government's time?

MR. BARUS: Yes, that it was done in the Government's time and in the course of their employment and it is also an admission by the plaintiff to show what was done and whether or not it is the same thing as described in the patent in suit.

MR. BOYCE: I want to make the record clear that I object to these weekly reports, monthly reports and notebooks in so far as they tend to prove any rights of the Government on the ground previously stated, namely, that whatever rights the United States Government may have in this invention must be asserted by the Government itself.

THE COURT: Denied, reserving the right to pass on your objection on final hearing.

(Received in evidence and marked "Defendant's Exhibit No. 1." *See Exhibits, Volume IV, page 459.*)

DIRECT EXAMINATION BY MR. BARUS (Continued):

MR. DELLINGER: I will state what I know of the circumstances which led up to the doing of the work relating to the relay described in the article in the *Journal of the American Institute of Electrical Engineering* for April, 1922, at page 310.

That is the article on the relay recorder.

About the beginning of 1921 the War Department asked the Bureau of Standards to carry on for it a number of research projects. One of these was the development of the relay recorder. This particular project was assigned a project number among the others and the character of the work was agreed on between the representatives of the War Department and the bureau. Mr. Dunmore was assigned to this work and was engaged actively upon it particularly during the latter part of 1921.

The result of this work was the development of a successful device in two ... one of them a device actuated by batteries, and the other a device actuated by alternating current. The alternating current feature of the work as I recall begun shortly after I returned from a four months' trip in Europe, my return being about the end of September, 1921, the work being carried on actively from about that time until the end of the year.

Upon the completion of the laboratory phases of the work there were several of the instruments made, the bureau draftsmen participating in the design detail and the bureau shops constructing the apparatus and a publication was prepared and appeared as you have indicated in the *Journal of the A. I. E. E.*

I am shown a paper certified by the Secretary of Commerce as being on file in the Bureau of Standards and entitled "Editorial Record sheet for paper entitled 'A Relay Recorder for Remote Control by Radio by F. W. Dunmore.'" I can identify the signatures on that paper.

I recognize the signature of Mr. Dunmore as author and of Dr. Stratton, as director, approving the publication.

MR. BARUS: It is requested that the paper shown the witness be marked Defendant's Exhibit D for Identification.

(The same paper was marked "Defendant's Exhibit D for Identification.")

By MR. BARUS:

Q. 24. Referring to Defendant's Exhibit D for identification, please explain the rules or regulations of the bureau relating to this document?

MR. BOYCE: I object.

THE COURT: Is it a practice or custom or what?

THE WITNESS: There are no written rules bearing particularly upon this question you now ask. It is a definite practice.

* * * * *
* * * * *

MR. DELLINGER: The particular document you have given me is a form called *Editorial Record,* which was submitted with every paper submitted for publication in the bureau. It includes a short abstract for the convenience of the bureau's editorial committee in considering the paper and for record purposes, the practice of the bureau being that no paper may be issued until after it has been approved first by the chief of the division in which the work is done and then by the editorial committee which reads it and finally the approval of publication by the director.

I believe that is as far as I can go in answering the question inasmuch as the Judge limited me to those things which are not in writing.

THE COURT: Will you now point out such rules as are in writing as pertain to this point?

MR. DELLINGER: All members of my section were given a document prepared by me of which I have a copy before me, dated February 26, 1920, entitled "Preparation of papers," giving information in regard particularly to the form of papers and a small amount of information on procedure in handling them, intended for the

general improvement of the papers put out by the section. That includes a specific statement that when papers are prepared in a periodical rather than in one of the bureau's own series of publications, that it must be submitted for approval by the editorial committee just the same as any other papers for inside publication.

I have also a copy of a document stating the types of abstracts which are required for our bureau for publication. This is one put out by the general office of the bureau and is dated May 31, 1922. The procedure described in it——

MR. BOYCE: I object to that. If we have the document, the document speaks for itself.

* * * * *

THE COURT: He is not defining the procedure or describing it. You may go on.

MR. DELLINGER: The date is May 31, 1922, and it is the earliest version of the rules and abstracts which I was able to find in a brief search before I came here but the practices indicated here were also in effect before May, 1922. If there is an earlier version of this rule in writing in the Bureau of Standards, I will have prepared for submission here a certified copy of such rules covering the period from December, 1921 to May 31, 1922 and also a certified copy of the document which I have produced and which is dated May 31, 1922.

THE COURT: You do not want that certified, do you?

MR. BOYCE: I do not want it certified.

THE COURT: It has been testified that it was the document.

THE WITNESS: The later document I have here and can submit it now. You want a certified copy of the other and I will secure it for you.

MR. BARUS: The defendant offers in evidence the rules for abstracts referred to by the witness dated May 31, 1922.

MR. BOYCE: I desire to cross-examine on the paper.

THE WITNESS: May I ask a question as I am puzzled. You ask me to produce a certified copy. Does that still stand?

THE COURT: Not of this, but of the rules existing prior to May 31st, if you find that they were in writing.

DIRECT EXAMINATION BY MR. BARUS (Continued).

DR. DELLINGER: I am shown an article in the *Journal of the American Institute of Electrical Engineers* for July, 1922, page 488, which I understand is Plaintiffs' Exhibit 7. I am familiar with the device and work described in that article.

I first became acquainted with the work to which that article refers about the early part of January, 1922.

The matter first came to my attention in the following manner: During sometime about December, 1921, there was discussion among various members of the section as to the desirability of undertaking such work. As a part of this discussion, Mr. Dunmore informed me he had made a brief trial of a possible method of accomplishing this and I learned about this time during December that Mr. Lowell and Mr. Dunmore were both very anxious to be authorized to work on this subject as a regular assigned principal task.

I instructed both of the men to go on with the work that they were on, inasmuch as in both cases there was work which I considered to have considerable priority and I kept the matter in mind, however, as that was a matter in which I had considerable interest, and the matter was further discussed among members of the section.

Early in January, Mr. Lowell told me particularly that he would like to work further on this subject and I thereupon requested that he outline such ideas as he had and that he also outline his program as to details of the other job, that I had assigned him to do.

The question of Mr. Dunmore's participating in the development also arose and I instructed Mr. Dunmore to keep on with his work, and Mr. Lowell to put half time on this job and half time on the other job. I was well

aware that Mr. Dunmore had made this previous short experiment mentioned.

By MR. BARUS:

Q. 55. Was your instruction to Mr. Dunmore an instruction not to help Mr. Lowell any further in the work?

MR. BOYCE: Before you answer that question, may I inquire whether your instructions were in writing?

THE WITNESS: My instructions to Mr. Lowell were in writing.

MR. BOYCE: I ask that the testimony of the witness with regard to his instructions which were in writing be stricken out.

THE COURT: That he gave him instructions remains in. What the instructions were, should be stricken out.

MR. BARUS: I think there is a little confusion here. He has been talking about preliminary instructions which he gave Mr. Dunmore and Mr. Lowell which were not in writing. The final instructions which he gave Mr. Lowell were in writing.

By THE COURT:

Q. 56. What you have been testifying about so far were the preliminary instructions or is Mr. Barus in error on that?

A. My preliminary instructions that they keep on with the jobs they were on, that was, as I recall it, oral and subsequently in January I gave him written instructions.

Q. 57. Both Lowell and Dunmore?

A. As I recall it, Lowell only.

THE COURT: What were the instructions will come from the writing.

MR. BARUS: Yes. The question asked for instructions to Dunmore and those were oral instructions.

THE COURT: I see.

DIRECT EXAMINATION BY MR. BARUS (Continued):

DR. DELLINGER: As a result of my preliminary oral instructions to Mr. Lowell, it is my present recollection that the first thing which happened along that line was that Mr. Lowell gave me a very brief statement of his ideas about the work; a report which I considered to be too brief to be of value.

The memo. of January 9, 1922, which is included in the certified papers furnished by the Bureau of Standards is the report to which I refer.

When I received this report, I told Mr. Lowell that this report was not sufficiently detailed and that a more complete report would have to be submitted.

In this regard I gave Mr. Lowell some instructions in writing as to giving me a more full report, but I do not remember at the moment whether I did immediately following this memo. or immediately subsequent to this memo.

My attention is called to a memorandum to Mr. Lowell dated January 11, 1922, which is included in the certified copies of the paper in the Bureau of Standards. That is the memorandum to Mr. Lowell to which I refer.

Mr. Lowell furnished me with a further report as a result of my talk with him. That report is in writing.

My attention is called to the other memo., dated January 12, 1922. That is the report to which I refer, such memorandum being one of those included in the certified documents furnished by the Bureau.

MR. BARUS: Defendant offers in evidence the memorandum of January 9, 1922, furnished by Mr. Lowell to the witness, and the memorandum of January 11, 1922, furnished by the witness to Mr. Lowell and the memorandum of January 12, 1922, furnished by Mr. Lowell to the witness.

MR. BOYCE: My only objection is the underlying one that the Government must assert its own equities.

THE COURT: Yes. Admitted.

MR. BOYCE: May I have the general exception?

THE COURT: You may have exception to all the testimony with respect to this line of examining.

(Said papers were thereupon received in evidence and marked "Defendant's Exhibits Nos. 7, 7-A and 7-B." *See Exhibits, Volume IV, pages 589, 590, 562.*)

DIRECT EXAMINATION BY MR. BARUS:

DR. DELLINGER: Mr. Lowell furnished me with a written record of work which he did in connection with development of the device described in the Plaintiffs' Exhibit 7.

Mr. Lowell furnished me usually weekly and monthly reports and kept laboratory notebooks.

I am shown the documents included in the certified copies furnished by the Bureau of Standards. These are the time cards, laboratory reports and notebooks to which I refer.

I find here for certain times within this period pages from Mr. Lowell's notebook, his monthly reports and his weekly reports. I have not checked the completeness of this period, however. By the way, I believe you used the phrase time cards. These are not time cards but weekly report cards.

MR. BARUS: The documents certified include the weekly reports of Lowell from August 1 to September 1, 1921, and January 3 to January 15, 1922, and the monthly reports include those of Mr. Lowell from July, 1921 to July 15, 1922. The laboratory notebooks includes I understand the whole laboratory notebook.

DIRECT EXAMINATION BY MR. BARUS (Continued).

DR. DELLINGER: The certified copies of the weekly report cards of Mr. F. D. Lowell, furnished by the bureau, do not include any weekly reports from September 24, 1921, to January 3, 1922. I do not know whether or not there were any reports covering that period. I do not know but have some reason to believe that there are not on file in the bureau any weekly report cards covering that period.

I have had searches made for them. I have not searched personally, with the result that no trace of them

could be found. I do not know whether Mr. Lowell kept any laboratory notebook prior to January, 1922.

At the moment I must say I do not know whether or not the Bureau of Standards files contain any laboratory notebook of Mr. Lowell for date earlier than January, 1922.

If there is such a book dating between December, 1921 and 1922, I will furnish a certified copy of same. My own knowledge is this, that within the past year searches have been made many times for documents which would bear on this issue, particularly by Mr. Dunmore and myself, and I think if such a notebook existed we certainly would have found it. Searches were made and the result of them was nothing.

MR. BARUS: Defendant offers in evidence the weekly reports, monthly reports and notebook of Percival D. Lowell, covering the period August 1 to September 24, 1921, and January 3, to July 15, 1922, in the case of the weekly reports; covering the period July, 1921, to July 15, 1922, in the case of the monthly reports; and the whole notebook, I am not sure that the dates are correct.

MR. BOYCE: The same objection.

THE COURT: Same ruling.

(Received in evidence and marked "Defendant's Exhibit No. 8." *See Exhibits, Volume IV, page 596.*)

MR. BARUS: These are offered both on the merits and in connection with the special defense.

DIRECT EXAMINATION BY MR. BARUS (Continued):

DR. DELLINGER: I am shown a document certified by the Secretary of Commerce as being on file in the Bureau of Standards entitled "Editorial Record Sheet" for paper entitled "Notes on the Development of an Electron Tube Amplifier using 60-cycle alternating current to supply power for the filaments and plates" by P. D. Lowell. I can identify the signatures on that document.

They are the signatures of E. C. Crittenden, chief of the electrical division, P. D. Lowell, the author, F. C.

Brown, who was the acting director or assistant director. There are some initials in addition which I can identify.

I can identify the initials. There are my own initials, placed there as second chief under the signature of the chief of the electrical division, and also the initials of H. D. Hubbard initialing for the editorial committee of the bureau.

STATEMENT OF COUNSEL AS TO LICENSES.

"In connection with the testimony of Mr. Brady, plaintiffs' counsel has handed to defendant's counsel copies of thirteen licenses. In order to avoid encumbering the record by copies of these licenses, it is agreed that:

"1. Two of the licenses are under Patent No. 1,455,141, only one of these being granted to Argus Radio Corporation on June 8, 1926 ($1000 being paid on execution as advance royalties) and the other being granted to Fansteel Corporation on July 15, 1926, $5000 being paid on execution as advance royalty for first year and $5000 being agreed to be paid for second year, with right to continue license from year to year on paying $5000 for each year.

"2. Two of the licenses are to Philadelphia Storage Battery Co., one being granted on October 15, 1926, under Patent No. 1,455,141, and patents to issue on 26 listed applications $5000 minimum annual payments in advance) and the other being granted October 7, 1927, under Patent No. 1,635,117.

"3. Two of the licenses are to the Elkon Works under the same patents as the license to Philadelphia Storage Battery Co., the licenses being granted October 15, 1926 ($1000 being paid as advance royalties, with right of license to cancel if the annual royalties do not amount to $1000), and October 5, 1927, respectively.

"4. Three of the licenses are to Grigsby-Gruno-Hinds Co., one being dated February 16, 1927, under Patent No. 1,455,141 and two enumerated applications (minimum of $5000 a year), the second dated October 4, 1927, under Patent No. 1,635,117, and the third being dated November 18, 1927, under No.

1,606,212 with a minimum payment on 5000 units per year.

"5. One license is to the Brandes Products Corporation dated October 1, 1927, under Patents Nos. 1,455,141, 1,606,212 and 1,635,117 and twenty-six applications, requiring payment of a minimum of $5000 a year.

"6. One license is to Briggs & Stratton Corp., dated January 1, 1928, under Patents Nos. 1,455,141, 1,635,117 and twenty-six listed applications, $6000 advance royalties being paid on execution.

"7. One license, dated January 19, 1927, is to Willard Storage Battery Co., under Patent No. 1,455,141 and twenty-six applications, $5000 being paid on execution and a minimum of $5000 to be paid annually.

"8. One license, dated July 13, 1922, is to Morkrum Company under Patent No. 1,635,117 and is limited to relays, payment of $25 for each relay."

MR. EDWARDS: I wish to offer in evidence pages 1 to 4, inclusive, of the proceedings of the American Institute of Electrical Engineers for April, 1922.

(Received in evidence and marked "Plaintiffs' Exhibit No. 53." *See Exhibits, Volume III, page* 199.)

EXHIBITS OFFERED IN THE CASE OF DUBILIER CONDENSER CORPORATION AND FRANCIS W. DUNMORE V. RADIO CORPORATION OF AMERICA, AND DUBILIER CONDENSER CORPORATION, PERCIVAL D. LOWELL AND FRANCIS W. DUNMORE V. RADIO CORPORATION OF AMERICA IN THE DISTRICT COURT OF DELAWARE, AND REFERRED TO IN PROFFER OF EVIDENCE UNDER RULE 46 IN VOL. I, PAGES 230-262 OF RECORD.

PLAINTIFFS' EXHIBIT NO. 1.

Lowell & Dunmore U. S. Patent No. 1,455,141, May 15, 1923, in Suit printed on Pages 2-11, of Vol. II (Book of Exhibits).

PLAINTIFFS' EXHIBIT NO. 2.

Dunmore & Lowell U. S. Patent No. 1,606,212, November 9, 1926, in suit, printed at Page 373, Vol. II (Book of Exhibits). This Exhibit is the same as plaintiff's Exhibit 90.

PLAINTIFFS' EXHIBIT NO. 3.

Dunmore U. S. Patent No. 1,635,117, July 5, 1927, in Suit. This patent is printed on pages 12-23 of Vol. II (Book of Exhibits).

PLAINTIFFS' EXHIBIT NO. 4.

License Agreement, Dubilier Condenser and Radio Corporation and Francis W. Dunmore and Percival D. Lowell, October 20, 1924. This Exhibit is the same as plaintiffs' Exhibit 4, and is printed on Pages 171-182, Vol. II (Book of Exhibits).

PLAINTIFFS' EXHIBIT NO. 5.

MEMORANDUM OF AGREEMENT made and entered into this 19th day of May, 1927, by and between DUBILIER CONDENSER CORPORATION, a corporation organized under the laws of the State of Delaware, having its principal office and place of business at 4377 Bronx Boulevard, County of Bronx, City and State of New York (hereinafter called "DUBILIER"), and FRANCIS W. DUNMORE, of the City of Washington, District of Columbia, and PERCIVAL D. LOWELL, of Richmond Hill, in the State of New York (hereinafter called the "INVENTORS"),

WITNESSETH:

WHEREAS, heretofore and on the 20th day of October, 1924, the Inventors made and entered into a certain agreement in writing with Dubilier concerning Letters Patent 1,455,141 granted to the Inventors on May 15, 1923, and entitled "RADIO RECEIVING APPARATUS"; and

WHEREAS, the Inventors have obtained a further patent entitled "POWER AMPLIFIERS" under date of November 9, 1926, known as No. 1,606,212, based on an application filed March 21, 1922, as Serial No. 545,493, and which is separate and apart from Letters Patent No. 1,455,141, embraced by the aforementioned agreement; and

WHEREAS, Lowell, one of said Inventors, has filed applications for improvements on the invention covered by said Letters Patent 1,455,141, which applications are serially numbered 2214 and 2215, and bear a filing date of January 13, 1925.

WHEREAS, Dubilier is desirous of acquiring a license to manufacture, use and sell apparatus embodying the inventions of both aforesaid Letters Patent and said pending applications, and such modifications thereof and improvements thereon as the Inventors have heretofore made or may hereafter make, together with the right to control all future licenses that may be granted, as hereinafter more fully set forth;

NOW, THEREFORE, for and in consideration of the premises and the mutual promises and covenants by each of the parties hereto to the other hereinafter made, and the sum of $1,984.03 by Dubilier to the Inventors in hand paid, the receipt whereof is hereby acknowledged, the parties hereto do hereby agree each with the other as follows:

FIRST: Nothing in this agreement hereinafter contained shall be in any wise construed to avoid, affect, modify or in any wise alter any action that may have been taken by either party to the agreement between Dubilier and the Inventors made and entered into on October 20, 1924, as hereinbefore recited.

SECOND: The Inventors covenant that they are the sole and exclusive owners of the aforesaid inventions and each of them and the patents and applications covering the same, and that they have full right to enter into this agreement, except for the following licenses which have already been granted by them, to wit:

(a) A non-exclusive, non-transferable license to the Timmons Radio Products Corporation covering Letters Patent 1,455,141 only;

(b) A non-exclusive, personal, non-transferable license to the United States Government for governmental purposes only, which arises out of the employment of the Inventors by the Government and is implied by such employment.

THIRD: The Inventors hereby further reserve the right to grant the following licenses under the said patents and applications upon payment of the initial sum mentioned below in the nature of advance royalty and with the royalty per device fixed as hereinafter set forth or upon terms not less favorable to the Inventors and to Dubilier than the terms which are hereinafter described and which the Inventors are privileged to arrange with the prospective licenses, to wit:

(a) A non-exclusive, personal, non-transferable license to the Pathe Phonograph & Radio Corporation or its nominees, upon the payment of One Thousand Dollars ($1,000) advance royalty and a specific royalty of Fifty Cents (50¢) per device;

(b) A non-exclusive, personal, non-transferable license limited to the use of the invention only in connection with the clock mechanisms to the International Time Recording Company upon payment of Five Hundred Dollars ($500) advance royalty and a specific royalty of One Dollar ($1.00) per device;

(c) A non-exclusive, personal, non-transferable license to Brandes Products Corporation upon payment of One Thousand dollars ($1,000) advance royalty, and a specific royalty of Fifty Cents (50¢) per device;

(d) A non-exclusive, personal, non-transferable license for use of invention only in connection with wired wireless to Wired Radio, Inc., upon payment of One Thousand Dollars ($1,000) advance royalty and a specific royalty of Fifty Cents (50¢) per device;

(e) A non-exclusive, personal, non-transferable license to Timmons Radio Products Corporation upon payment of One Thousand Dollars ($1,000) advance royalty and a specific royalty of Fifty cents (50¢) per device, under Letters Patent 1,606,212 and applications Nos. 2214 and 2215 for the manufacture of power amplifiers and loud speakers in addition to the license heretofore granted to

said Company under Letters Patent 1,455,141 hereinbefore referred to, but with respect only to the license to be granted under Letters Patent 1,606,212 the same shall not contain the restrictions, limitations or reservations in favor of the Timmons Radio Products Corporation which are included under the license heretofore granted the said Corporation on Letters Patent 1,455,141; and Dubilier hereby authorizes the issuance of this particular license and authorizes the Inventors to issue the same upon the conditions hereinbefore set forth.

The Inventors hereby covenant and agree that before executing and delivering any of the aforementioned license agreements, they will submit the same to Dubilier for approval by it as to the form thereof and the terms thereof, and Dubilier agrees not to arbitrarily withhold such approval. Dubilier further agrees that it will not require the aforesaid licensees to agree to use Dubilier condensers, provided other consideration is given to Dubilier by way of additional royalties to be paid by the prospective licenses which, in Dubilier's judgment and opinion, is equivalent to the profits which it would have enjoyed upon the sale of such condensers to such prospective licensees, but it is understood that in any event where any licensee does not use Dubilier condensers the inventors shall be entitled to fully one-half of the proceeds of such licenses, as hereinafter set forth.

FOURTH: Since entering into the agreement of October 20, 1924, the following licenses have been granted, although none of these licenses includes any rights under Letters Patent 1,606,212:

Licensee	Date	Subject Matter of License
Peerless Radio Corp.	April 25, 1925	Lowell & Dunmore patent 1,455,141
Peerless Radio Corp. Supplementary agreement B battery kits	July 10, 1925	"
Argus Radio Corp.	June 8, 1926	"
Fansteel Products Corp.	July 15, 1926	"

Elkin Works, Inc.	Sept. 15, 1926	Lowell & Dunmore patent 1,455,141 & applications 2214 & 2215 and also Dubilier applications.
Philadelphia Storage Battery Co.	Oct. 15, 1926	"
Willard Storage Battery Co.	Jan. 17, 1927	"
Willard Storage Battery Co. Addenda to agreement	Feb. 8, 1927	"
Grigsby-Grunow-Hinds Co.	Feb. 16, 1927	Lowell & Dunmore patent 1,455,131 & applications 2214 & 2215.

Copies of all the licenses affecting the subject matter of this agreement are herewith attached and form a part hereof, and as provided in paragraph "First" hereof are not to be affected by this agreement.

FIFTH: It is mutually understood and agreed that should any licensee under the said patent No. 1,455,141 be sued, or threatened with suit under Letters Patent held by an adversary, that the Inventors and Dubilier each shall have the independent right to grant a free non-exclusive license to such adversary in consideration of a similar license under said adversary's patent, or upon such other terms as the parties hereto mutually agree upon, it being expressly agreed however, that each party shall keep the other fully informed in the matter and that each shall safeguard the other, the intent and purpose of the covenant being to provide that all licensees shall be maintained immune from damages arising out of any attack for infringement insofar as the inventors and Dubilier may be able to quiet said attack by licensing the adversary. Any sum or sums which shall be paid for effecting such settlement shall be divided one-half with the Inventors and one-half with Dubilier.

SIXTH: Subject to the licenses and rights already granted and reserved by the Inventors as provided in Paragraph "third" hereof, the Inventors hereby give and grant to Dubilier, its successors and assigns the exclusive right to manufacture, use and sell and to grant to others, upon such terms and conditions as in its uncontrolled judgment and discretion it may deem proper, the right to manufacture, use and sell the aforesaid inventions as covered by both the aforesaid Letters Patents and applications for Letters Patent, and any other improvements of the same class invented or hereafter invented by said Inventors, either solely or jointly, throughout the United States, its territories and dependencies, and covenant to grant to Dubilier or its nominee or nominees, the exclusive right to manufacture, use and sell, and to grant to others the right to manufacture, use and sell inventions in each and every foreign country where said inventions may be covered by Letters Patent.

SEVENTH: The Inventors, during the life of this agreement, agree to file and prosecute any reissue of any United States Letters Patent, as the said Inventors and Dubilier may mutually agree are necessary and desirable to adequately protect the said inventions; and the Inventors covenant and agree to keep Dubilier informed respecting all proceedings in the United States Patent Office in connection with any such reissue, interference or any other proceeding that may arise therein and to consult Dubilier before taking any action that may detrimentally affect its interest, and to submit to Dubilier for approval by it and/or its counsel, before filing the same, any and all papers respecting the said proceedings or any of them.

EIGHTH: Dubilier shall bear the expense of filing and prosecuting any further applications for Letters Patent upon the aforesaid inventions, modifications and improvements, as it may elect to file in the United States or in foreign countries and the expense of maintenance of all Letters Patent that may be granted upon such applications, and hereby agrees to give to the inventors timely written notice as to all countries in which it elects to file additional applications for Letters Patent.

NINTH: The Inventors shall execute all papers that may be necessary or desirable to enable Dubilier, or its

nominee or nominees, to file and prosecute applications for Letters Patent in all countries in which Dubilier shall elect to secure patent protection for said invention, modifications and improvements, and to prosecute all suits thereunder.

TENTH: In order to maintain this license Dubilier covenants to pay to the Inventors during the life of this agreement a royalty of Five Thousand dollars ($5,000) no more and no less for any calendar year, payable Two thousand five hundred dollars ($2,500) on the 30th day of July and Two thousand five hundred dollars ($2,500) thereof on the 30th day of January in each year, said payments to be made by check payable to the Inventors and delivered to them care of F. W. Dunmore, 3411 Rodman Street, Washington, D. C., which address shall be sufficient for all notices hereunder. In any year in which Dubilier fails to pay the full sum of Five Thousand dollars ($5,000) as herein provided, this license shall be automatically terminated, unless within sixty (60) days from the date that the Inventors shall give written notice to Dubilier demanding payment of any deficiency in the amount of such royalty for the preceding year, Dubilier shall make payment of such deficiency; and it shall be the duty of the Inventors to give such notice. Receipt is hereby acknowledged of payment in full of all sums due to the Inventors up to and including December 31st, 1926, under the agreement of October 20, 1924, hereinbefore recited.

ELEVENTH: In addition to said royalty payment by Dubilier to the Inventors paid for the continuation of this license, Dubilier covenants to pay to the Inventors one-half of the royalty payments received from the licenses which may be granted by Dubilier under this agreement and similarly the Inventors agree to pay to Dubilier one-half of the royalty which may be received from licenses hereafter granted by the Inventors, including the licenses heretofore and herein reserved (except as modified by the following paragraph), but all licenses already granted shall be performed as written and executed.

It is understood and agreed, however, that Dubilier may waive its share of the royalties paid by any licensee, in consideration of said licensee agreeing to buy for the duration of the particular license electrical condensers from Dubilier in quantities and at prices satisfactory to

Dubilier; and the Inventors, in every such case shall not be entitled to share in the proceeds of the sale by Dubilier of such condensers. With respect to the reserved licenses herein described, Dubilier shall not be entitled to share the royalties payable to the Inventors if the Licensees shall either have agreed to buy electrical condensers from Dubilier or in lieu thereof pay additional royalty to Dubilier as heretofore in paragraph "Third" hereof provided.

TWELFTH: Should this agreement be terminated for any cause whatsoever prior to the expiration of the patents mentioned, herein, Dubilier covenants and agrees to assign to the said Inventors any and all outstanding licenses which may be granted hereunder and Dubilier shall not thereafter share in the amounts of royalties received by the Inventor from such licenses, if any, after the date of said assignment, except that Dubilier shall always be privileged to continue to enjoy the condenser business reserved to it in lieu of royalties as in any of said licenses provided.

THIRTEENTH: The term "device" as used in this agreement is understood to refer to and include the following:

(a) A device for supplying filament current to radio receiving sets, replacing the usual A battery.

(b) A device for supplying plate current to radio receiving sets, replacing the usual B battery.

(c) A combination device for supplying both A and B battery current for radio receiving sets.

(d) Apparatus comprising a loud speaker sound reproducer of the electrodynamic type operating from the lighting circuit.

(e) Apparatus constituting a power speaker for sound reproduction where the field circuit is supplied with rectified current.

(f) Any combination of two or more of these devices under (a) to (e).

FOURTEENTH: Dubilier and the Inventors agree to require all licensees named to keep proper books of account with reference to all apparatus which they may manufac-

ture and sell embodying the aforesaid inventions, and render periodic statements which shall be open to inspection by both Dubilier and the Inventors, or their duly authorized agents, accompanied by payment of royalties shown to be due. Such statements shall be verified when necessary and may be checked at all reasonable times by an accountant designated by Dubilier and/or the Inventors. Dubilier and the Inventors agree to promptly exchange copies of all reports and statements received from licensees and keep each other informed of the progress of developments under the licenses.

FIFTEENTH: In order to formulate a method of procedure for payments under this agreement, the parties agree as follows:

(a) Dubilier or its nominee shall collect royalties due under all licenses granted by Dubilier or approved by Dubilier and signed by the Inventors;

(b) Said royalties so collected shall be divided equally between Dubilier and the Inventors and the proceeds promptly paid;

(c) Dubilier shall pay Ten per cent. (10%) of the amount received to the Trust Fund now on deposit at the Security Savings & Commercial Bank, 9th and G. Streets, N. W., Washington, D. C., account No. 43,142 in the name of PERCIVAL D. LOWELL, FRANCES W. DUNMORE AND JOHN B. BRADY, TRUSTEES. To these the name of the Treasurer of Dubilier shall be added as a fourth trustee.

(d) The Inventors shall pay Ten per cent. (10%) to the aforesaid Trust Fund of all amounts received from all licensees but the Inventors shall not be required to pay any amounts to said Trust Fund arising from licenses granted to Timmons Radio Products Corporation or from the minimum annual sum payable by Dubilier in accordance with paragraph "Tenth" hereof.

SIXTEENTH: The Inventors and Dubilier mutually agree that the amounts paid into said Trust Fund shall be used within the discretion of the Trustees in the Payment of legal expenses incident to suits in which the Inventors may join and for the protection of the patent situation relating to the inventions herein referred to. It is also mutually understood and agreed that when the said Trust

Fund shall total the sum of Five thousand dollars ($5,000) that payments into the same may be discontinued, to be resumed when necessary to re-establish the aforesaid amount. The Trustees shall render an account and statement of said fund semi-annually.

SEVENTEENTH: The Inventors hereby give and grant to Dubilier the right to sue in its own name and at its own expense any infringers of said patent or patents and to collect for its own use and behoof such damages and profits as may be assessed as the result of such suit or suits, provided, however, that in all cases where the Inventors wish to join in any suit or suits they shall have the right so to do, in which event the expenses shall be paid out of said Trust Fund, and when such fund is insufficient, any additional amount required shall be paid in equal shares by the Inventors and Dubilier; and the Inventors shall then share equally in the division of all moneys received, as damages or profits that may be collected.

EIGHTEENTH: The Inventors hereby specifically grant to Dubilier the right to grant sub-licenses to others under the aforesaid patents, and in every instance the Inventors are to be furnished with a copy of any agreement for any inventions within the scope of this agreement. For the general protection and advancement of the patent situation, Dubilier agrees to consider the granting of licenses to others under the patents herein set forth whenever the Inventors deem it beneficial so to do, and in any such case Dubilier agrees to act promptly on the application for such a license or the suggestion of the Inventors with respect thereto.

NINETEENTH: If, as a result of court decisions, substantial protection for the main subject-matter of this agreement is not afforded by said patents or if adversely held patents are declared to prevent manufacture of devices under said patents, Dubilier may terminate this agreement if it shall so elect and restore all rights hereunder to the Inventors including an assignment of all the outstanding licenses.

TWENTIETH: In case of the termination of this agreement, for any cause whatsoever, all rights and obligations of the parties hereunder shall cease and their original

rights of prosecution and defense of infringement suits shall be restored, except as stated in Paragraph numbered Twelve above.

TWENTY-FIRST: If any controversy shall arise between the parties as to the performance of any obligation under this agreement, the matter in controversy shall be submitted at the option of either party, to three arbitrators who shall have power to decide the matter in controversy, and to determine what, if any, amount shall be paid by either party to the other as liquidated damages for any breach of this agreement, and each party agrees to pay to the other any damages that may be assessed by the arbitrators. Upon such contingency either party may elect to arbitrate and shall notify the other party by registered mail. Within thirty days from the date of receipt of such notification both parties must appoint an arbitrator, and within sixty days after the date of such appointment both arbitrators must appoint a third arbitrator. If either party fails to appoint an arbitrator within the specified time, then the other party can apply to the American Arbitration Association to appoint for him the arbitrator, whom he must accept, and if both parties cannot decide upon a third arbitrator within the specified time, then they may apply to the American Arbitration Association for the third arbitrator.

TWENTY-SECOND: This agreement is assignable and the agreement and the covenants herein contained shall be binding upon and inure to the benefit of the heirs, executors, administrators, successors and assigns of the parties hereto.

TWENTY-THIRD: Dubilier agrees under this license not to enter into the manufacture of apparatus under the invention covered by Letters Patent 1,455,141 within an area of ten miles of Philadelphia, and agrees further not to grant licenses to others engaging in such manufacture in said area without the consent of the Inventors, but this limitation and reservation shall not apply to articles manufactured under the invention covered by Letters Patent 1,606,212.

IN WITNESS WHEREOF, Dubilier has caused these presents to be signed by its proper officer and its corporate seal to be hereunto affixed, and the Inventors have here-

unto set their hands and seals the day and year first above written.

DUBILIER CONDENSER CORPORATION

(Seal) By (Sgd.) FRED D. WILLIAMS,
Pres.

Attest:
W. J. SMITH
Secretary

PERCIVAL D. LOWELL

Witness:
R. JORDAN

FRANCIS W. DUNMORE

Witness:
CHAS. G. HUBBARD

STATE OF NEW YORK }
COUNTY OF BRONX } *ss.:*

On this 12th day of May, 1927, personally appeared before me FRED D. WILLIAMS, to me known and known to me to be the President of the DUBILIER CONDENSER CORPORATION of New York City, and he duly acknowledged to me that he executed the foregoing instrument on behalf of the said Corporation, and that he was fully authorized to do so.

WITNESS my hand and Notarial Seal.

ARTHUR WILLIAMS, JR.,

(Seal) Notary Public.
(Stamp)

STATE OF NEW YORK }
COUNTY OF QUEENS } *ss.:*

On this 16th day of May, 1927, personally appeared PERCIVAL D. LOWELL, to me known and known to me to be the individual named in and executed the foregoing instrument, and he duly acknowledged to me that he executed the same of his own free will for the purpose therein set forth.

WITNESS my hand and Notarial Seal.

REYNOLD JORDAN

(Seal) Notary Public.
(Stamp)

CITY OF WASHINGTON }
DISTRICT OF COLUMBIA } *ss.:*

On this 19th day of May, 1927, personally appeared FRANCIS W. DUNMORE, to me known and known to me to be the individual named in and who executed the foreing instrument, and he duly acknowledged to me that he executed the same for the purpose therein set forth.

WITNESS my hand and Notarial Seal.

CHARLES G. HUBBARD

(Seal) Notary Public.
D. C.
(Stamp)

PLAINTIFFS' EXHIBIT NO. 6.

AGREEMENT

THIS AGREEMENT executed this 15th day of July, 1927, by and between DUBILIER CONDENSER CORPORATION, a Corporation of the State of Delaware, having an office and place of business at 4377 Bronx Boulevard, New York City, and FRANCIS W. DUNMORE of Washington, District of Columbia.

WITNESSETH THAT WHEREAS, FRANCIS W. DUNMORE did on February 27, 1922 file application for Letters Patent of the United States on improvements in Relays, Serial

Number 539,591, and has obtained thereon Letters Patent No. 1,635,117, dated July 5, 1927; and

WHEREAS on July 13, 1922 the said Francis W. Dunmore entered into a license agreement, as per the attached copy, with Morkrum Company of Chicago, Illinois, covering the use of his invention in connection with printing telegraph and other electrical apparatus; and

WHEREAS, the invention as covered by said Letters Patent is also susceptible of use in radio broadcast entertainment receivers and particularly in electron tube apparatus as covered by Lowell and Dunmore patents No. 1,455,141, dated May 15, 1923 and No. 1,606,212, dated November 9, 1926, which form the subject matter of an agreement between said Dunmore and his co-inventor said Lowell, and said Dubilier Condenser Corporation dated May 19, 1927.

NOW, THEREFORE, TO ALL WHOM IT MAY CONCERN, BE IT KNOWN that for and in consideration of One Dollar ($1.00) by each party to the other in hand paid and the mutual provisions and covenants hereinafter set forth, the parties hereto have agreed and do agree as follows:

1. The parties to this instrument hereby state and declare that said patent 1,635,117 is embraced by said agreement of May 19, 1927, but only so far as it may cover radio-telephone broadcast receiving apparatus and not with respect to its use as a remote control device or apparatus for operation of relay mechanism, and said patent No. 1,635,117, is now hereby expressly included within said agreement, on the same terms, reservations, provisions and conditions, and no more, stated in said agreement as affecting the aforesaid Patent No. 1,606,212, and said Dunmore hereby retains for his own sole use and benefit, in connection with said patent No. 1,635,117, reservations, limitations and privileges of the same scope, nature, force and effect as those retained by Francis W. Dunmore and Percival D. Lowell jointly under said agreement with respect to Letters Patent 1,606,212. It is further understood and agreed that Francis W. Dunmore reserves to himself the exclusive right to grant licenses, collect royalties and otherwise personally enjoy for himself, his heirs, his legal representatives and his assigns all the benefits of the invention covered by said Letters Patent No. 1,635,117, wherever said invention is

used for the control of a remote control device or apparatus for operation of relay mechanism for effecting the opening and closing of an electrical circuit, but the rights so reserved by said Dunmore shall not in any manner extend to the manufacture, use, or sale of the invention as a rectifier or battery substitute for utilization in radio telephone broadcast receiving apparatus.

2. Dubilier Condenser Corporation agrees that in all licenses which may hereafter be granted under said Letters Patent 1,635,117 for radio telephone broadcast receiving apparatus, either singly or in conjunction with patents 1,455,141 and 1,606,212, the following clause must be included:

> "This license does not extend to licensee any rights under Letters Patent 1,635,117, to make, use or sell the invention of this patent as a circuit maker and breaker, such as for an electrical relay."

IN WITNESS WHEREOF the said DUBILIER CONDENSER CORPORATION has caused this agreement to be signed by its President and its corporate seal to be hereunto affixed, and the said FRANCIS W. DUNMORE has hereunto set his hand and seal the day and year first above written.

DUBILIER CONDENSER CORPORATION

By (Sgd.) FRED D. WILLIAMS.
President.

Attest:

(Sgd) W. J. SMITH
Secretary.

(Sgd) FRANCIS W. DUNMORE

Witness:

(Sgd) JOHN B. BRADY

STATE OF NEW YORK }
COUNTY OF BRONX } *ss.:*

On this 22nd day of July, 1927, personally appeared before me FRED D. WILLIAMS, to me known and known to me to be the President of the DUBILIER CONDENSER CORPORATION of New York City, and he duly acknowledged to me that he executed the foregoing instrument on behalf of the said Corporation, and that he was fully authorized to do so.

WITNESS my hand and Notarial Seal.

(Sgd) ANDREW A. MILLER

(Seal) (Stamp)

CITY OF WASHINGTON }
DISTRICT OF COLUMBIA } *ss.:*

On this 15th day of July, 1927, personally appeared FRANCIS W. DUNMORE, to me known and known to me to be the individual named in and who executed the foregoing instrument, and he duly acknowledged to me that he executed the same for the purpose therein set forth.

WITNESS my hand and Notarial Seal.

(Sgd) ELLEN G. McCARTHY

(Seal) Notary Public.
D. C.

(Stamp)

AGREEMENT.

This agreement, made this 13th day of July, 1922, between FRANCIS W. DUNMORE, of Washington, in the District of Columbia, party of the first part, and MORKRUM COMPANY, of Chicago, Illinois, a corporation of Maine, party of the second part, witnesseth: That, whereas the party of the first part is the inventor of certain improvements in Relays on which application for patent Serial Number 539,591, filed February 27th, 1922, is now pending; and whereas the party of the second part is desirous of manufacturing Relays embodying said improvements; Now, therefore, the parties have agreed as follows:

1. The party of the first part hereby agrees to license and empower the party of the second part to manufacture, or cause to be manufactured, Relays containing said improvements subject to the conditions hereinafter named, to the end of the terms of all Letters Patent which may be granted on said application, and to sell or lease the same. This license shall be exclusive to the party of the second part insofar as said device may be used with printing telegraph apparatus, without restriction (one type of which is the Morkrum Company Teletype Printer) or apparatus which performs a similar function, or which apparatus in a similar manner but which may perform other functions than printing letters. It is understood that the relay when used, as herein provided, may be operated by any suitable signal sent in any manner whatsoever without restriction.

II. In addition to the above exclusive license, the party of the first part hereby grants to the party of the second part a non-exclusive license to manufacture, and/or cause to be manufactured, sell or lease the said device for any purpose not covered in Paragraph 1.

III. The party of the first part agrees to furnish to the party of the second part working drawings of the relays and supply any technical information necessary in assisting with the production of the instruments.

IV. The party of the second part agrees to make full and true returns to the party of the first part, under oath, upon the first days of January, April, July and October in each year, of all relays containing the improvements covered in the above entitled application manufactured by them, or for them and sold or leased by them.

V. The party of the second part agrees to pay to the party of the first part Twenty-five ($25.00) Dollars as a license fee upon every relay manufactured by, or for said party of the second part containing the improvements covered by the above entitled application and sold or leased by them, and further agrees that after granting of the patent thereon, and beginning with the date of issue of said patent, to pay a minimum of $500 in royalties per year and on failure to pay this sum for any year this license shall automatically become entirely a non-exclusive license.

VI. The party of the second part agrees to place on the name plate affixed to this apparatus, in addition to any identification desired by the Company, the following notice:

DUNMORE RELAY

PATENT PENDING

and to mark the same with the patent number and date upon the granting thereof.

VII. Upon a failure of the party of the second part to make returns or to make payment of license fees, as herein provided, for thirty days after the days herein named, the party of the first part may terminate this license by serving a written notice upon the party of the second part; but the party of the second part shall not thereby be discharged from any liability to the party of the first part for any license fees due at the time of the service of said notice.

IN TESTIMONY WHEREOF THE MORKRUM COMPANY has caused this instrument to be executed by its officer thereunto duly authorized, and its corporate seal to be affixed, and FRANCIS W. DUNMORE, has signed and sealed this instrument this 5th day of July, 1922.

FRANCIS W. DUNMORE

MORKRUM COMPANY

By STERLING MORTON

President.

Witness

JOHN B. BRADY

J. O. CARR

CITY OF WASHINGTON
DISTRICT OF COLUMBIA } *ss.*:

On this 5th day of July, 1922, before me, personally appeared FRANCIS W. DUNMORE, to me known and known to me to be the individual named in and who executed the foregoing instrument, and he duly acknowledged to me that he executed the same.

WITNESS my hand and Notarial Seal.

CHRISTIE H. FESSLER

(Seal) Notary Public, D. C.

STATE OF ILLINOIS
COUNTY OF COOK } *ss.*:

On this 13th day of July, 1922, personally appeared before me STERLING MORTON, to me known and known to me to be the President of the Morkrum Company, of Chicago, Illinois, and he duly acknowledged to me that he executed the foregoing instrument on behalf of said company, and that he was fully authorized to do so.

WITNESS my hand and Notarial Seal.

LATHER VICTOR KRAUSE

(Seal) Notary Public.

PLAINTIFFS' EXHIBIT NO. 8

Paper No. 450, October 2, 1922, U. S. Bureau of Standards, "An Electron Tube Amplifier using 60-Cycle Alternating Current to Supply Power for the Filaments and plates," by P. D. Dowell. This exhibit is the same as plaintiffs' exhibit No. 106 and is printed in Vol. II (Book of Exhibits) at page 518.

PLAINTIFFS' EXHIBIT NO. 9

In Reply Refer to

GENERAL ELECTRIC COMPANY
General Office
SCHENECTADY, N. Y.

May 25, 1923.

Mr. John B. Brady,
Ouray Building,
Washington, D. C.

Dear Brady:

I have taken the liberty to bring to the attention of our Engineering Department, a patent No. 1455141, which you sent me on May 16.

I assure you that this matter will be given careful consideration and that you will be notified in the near future as to whether the General Electric will care to negotiate at this time for the rights of this patent.

Thanking you for bringing this matter to my attention, I wish to remain

Yours sincerely,

WENDELL L. CARLSON

Radio Engineering Dept.

WLC:S

John B. Brady
Received
May 28 1923
Washington, D. C.

PLAINTIFFS' EXHIBIT No. 10.

RADIO CORPORATION

66 BROAD STREET

NEW YORK

(Cut: Worldwide Wireless)

Ira J. Adams
Patent Attorney

Telephone
Broad 7100

Harry G. Grover
James G. Norton
Clyde A. Norton
Assistant Attorneys

November 16, 1923.

Mr. John Brady,
Ouray Building,
Washington D, C.

Dear Sir:

You asked us to consider the purchase of the Lowell and Dunmore patent 1,455,141. You also discussed the matter with me in my office here several weeks ago. I told you in general about our views and you asked me to think the matter over further and then definitely write you about the matter.

I carefully considered the question and we have decided that there are no valid claims in this patent that would be of interest to us.

Very truly yours,

IRA J. ADAMS

ija-g
cc/HED

John B. Brady
Received
Nov. 17 1923
Washington, D. C.

PLAINTIFFS EXHIBIT NO. 11.

Brady Diagram of Circuit of Dunmore Radio Set

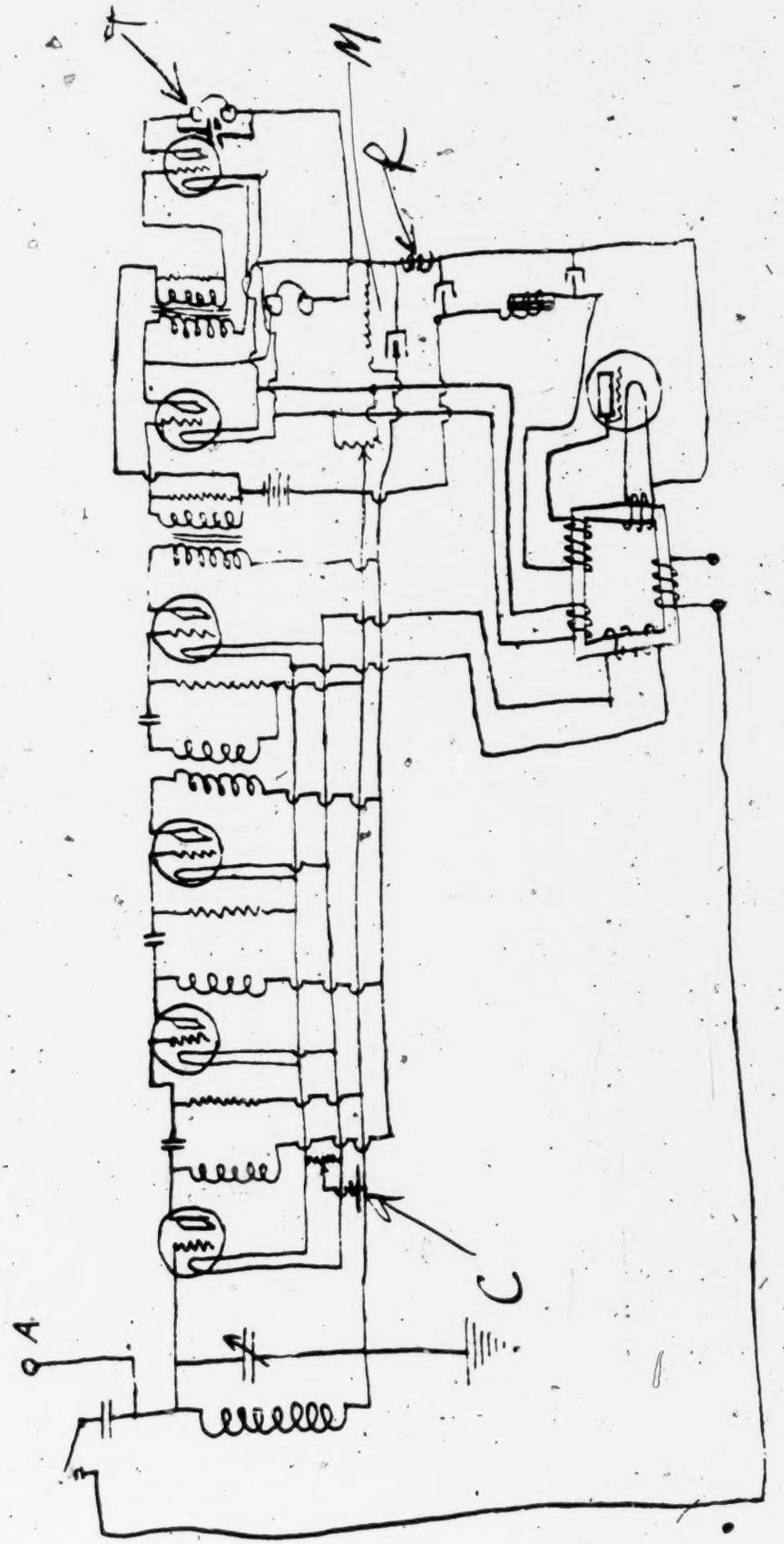

393-394

PLAINTIFFS' EXHIBIT NO. 12.
Brady Diagram of Circuit of Freed Radio Set Used by Dunmore.

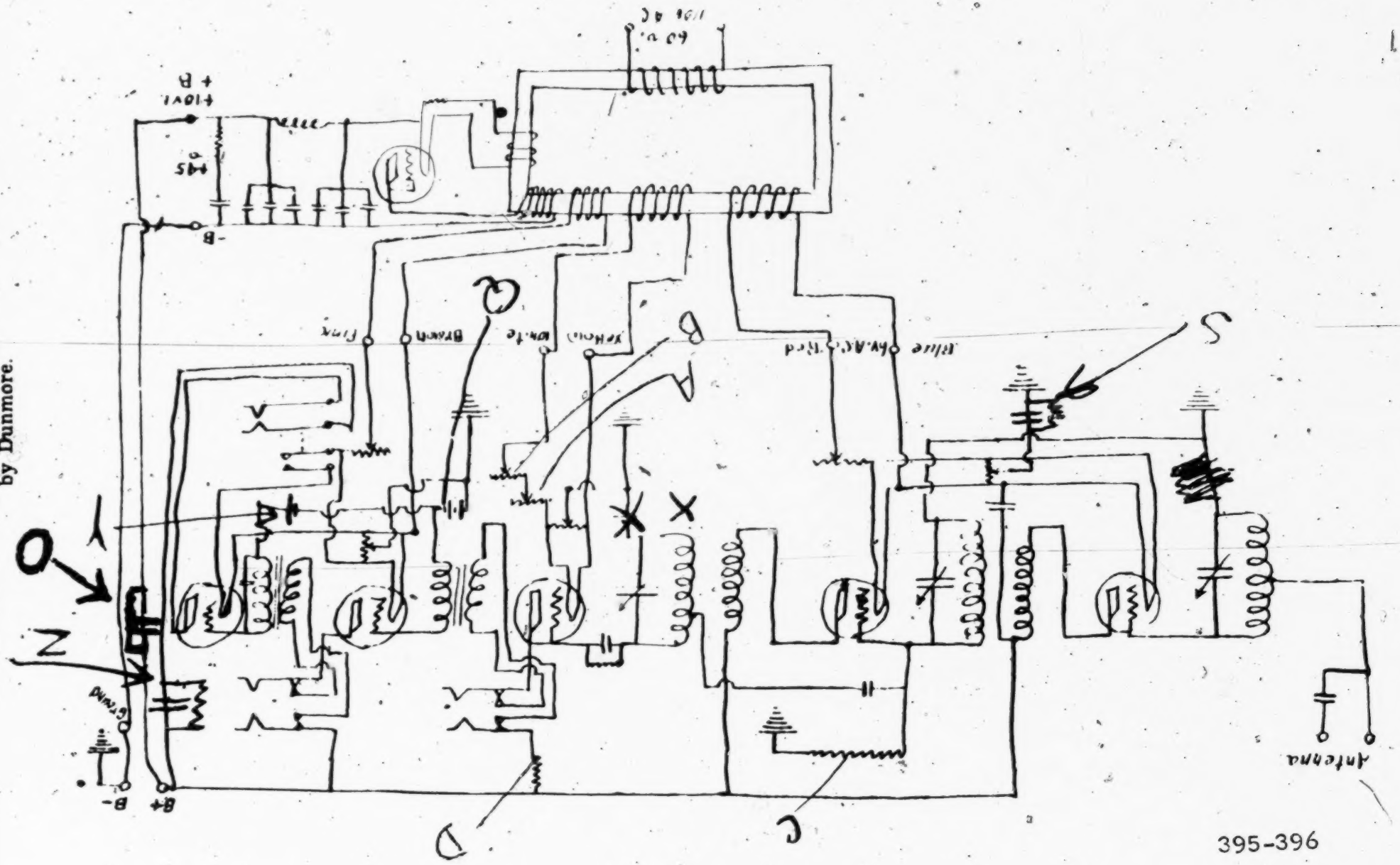

395-396

PLAINTIFFS' EXHIBIT NO. 13.

RADIO CORPORATION
OF AMERICA
233 BROADWAY

Ira J. Adams
Patent Attorney
Harry G. Grover

Harry G. Grover
James G. Norton
Carl M. Cohen
Samuel B. Smith
Terry B. Morehouse
David J. Bonett
Bernard S. Franklin
Harry Tunich
Phil L. Rodier
Samuel Tierney
Frank S. Misterly
Joseph D. Black
John M. Monstream

July 19, 1927.

John B. Brady, Esq.,
Ouray Building,
Washington, D. C.

Dear Mr. Brady:

I have your letter of July 13th in respect to the alleged infringement of patents 1,455,141, 1,606,212, 1,635,117.

We have already examined patents 1,455,141 and 1,606,212 and it is our position that we do not infringe any valid claims of these patents. Patent 1,635,117 has only recently come to our attention and we have not completed our study of the patent.

In respect to the charge that we are aiding and abetting others in the infringement of the patents referred to, as you no doubt know, we are doing nothing but licensing concerns under our patents and this we have the right to do.

Very truly yours,
IRA J. ADAMS

ija:kms

John B. Brady
Received
Jul. 21, 1927
Washington, D. C.

PLAINTIFFS' EXHIBIT NO. 13-A.

(Copy)

July 13, 1927.

Radio Corporation of America,
Woolworth Building,
New York City, N. Y.

Registered Mail.

Gentlemen:

My clients; Messrs. Lowell and Dunmore, and Dubilier Condenser Corporation, direct me to call your attention to Letters Patent of the United States numbered as follows:

1,455,141	May 15, 1923;
1,606,212	Nov. 9, 1926;
1,635,117	July 5, 1927;

which they are informed you are infringing.

You are also aiding and abetting others in the infringement of the above patents through the operations of your Socket Power Licenses, and my clients feel that you should respect their rights in the same way you expect others to recognize your patent rights.

You are requested to make settlement for past infringement and to notify me that you will desist from further infringement of these patents.

Yours very truly,

JBB/md

PLAINTIFFS' EXHIBIT NO. 13-B.

RADIO CORPORATION
OF AMERICA
233 Broadway
NEW YORK

Ira J. Adams
Patent Attorney

Harry G. Grover
James G. Norton
Edward W. Fearing
Carl M. Cohen
Samuel B. Smith
Terry B. Morehouse
David J. Bonett
Bernard S. Franklin
Harry Tunick
Phil L. Rodier
Samuel Tierney
Frank S. Misterly
Joseph D. Black
John M. Monstream

John B. Brady
Received
Jul 12 1927
Washington, D. C.

July 11, 1927.

Mr. John B. Brady,
Counsellor at Law,
Ouray Bldg.,
Washington, D. C.

Dear Mr. Brady:

Mr. Beam has sent me a copy of your letter to him of July 1st in respect to the Lowell and Dunmore patents.

We have gone quite thoroughly into the Lowell and Dunmore patents and talked to you about them several years ago. In view of our study of such patents, I think it would be a waste of time to have an interview on the situation. However, I do not want to close the door to anyone who thinks he has something of importance to say, and if you want to talk to me I will be glad to confer with you on a date that is mutually satisfactory. I do not think at this stage that there should be a joint conference.

Very truly yours,

cc-Mr. Beam
ija :kms

IRA J. ADAMS.

PLAINTIFFS' EXHIBIT NO. 13-C.

WESTINGHOUSE ELECTRIC &
MANUFACTURING COMPANY

150 Broadway, New York

July 5, 1927.

Office of
Victor S. Beam,
Assistant to
Vice President Terry

John B. Brady, Esq.,
Ouroy Building,
Washington, D. C.

Dear Sir:

Referring to yours of the 1st instant, I think the question you raise is one which should be taken up initially with the Radio Corporation and I am sending a copy of your letter to Mr. Ira J. Adams, patent attorney of that Corporation, asking him to look into this matter.

Yours truly,

VICTOR S. BEAM
Assistant to
Vice President.

Received
John B. Brady
Jun 6 1927
Washington D. C.

PLAINTIFFS' EXHIBIT NO. 13-D.

July 1, 1927.

Mr. Victor S. Beam,
Westinghouse Electric & Mfg. Co.,
150 Broadway,
New York City.

Dear Mr. Beam:

With reference to your letter of June 24, 1927, stating that Radio Corporation of America and its associated licensors do not guarantee to socket power licensees immunity from suits under patents not owned or controlled by the licensors, my clients, Messrs. P. D. Lowell and F. W. Dunmore would appreciate an appointment with you and representatives of the licensors. At this meeting my clients would like to discuss the scope of the claims of Letters Patents Nos. 1,455,141, 1,606,212 and 1,635,117.

If convenient to you, we would like to meet in New York, and we suggest July 7, 1927, at 10 A. M. in your office, unless some other time would be more agreeable.

Yours very truly,

JBB/ls

(In lead pencil): Dunmore Note & return

J. B. B.

PLAINTIFFS' EXHIBIT NO. 13-E.

WESTINGHOUSE ELECTRIC &
MANUFACTURING COMPANY

150 Broadway, New York

Office of
Victor S. Beam,
Assistant to
Vice President Terry

June 24, 1927.

John B. Brady, Esq.,
Ouray Building,
Washington, D. C.

Dear Sir:

Replying to yours of the 13th instant, the Radio Corporation of America and its associated licensors do not guarantee the socket power licensees immunity from suits under patents not owned or controlled by those Companies.

Yours truly,

VICTOR S. BEAM

Assistant to
Vice President.

John B. Brady
Received
Jun 26 1927
Washington, D. C.

PLAINTIFFS' EXHIBIT No. 13-F.

June 13, 1927.

Mr. Victor Beam,
150 Broadway,
New York City, N. Y.

Dear Mr. Beam:

I have clients who control patents and pending applications about to issue on the subject of socket power devices.

A selected number of the larger manufacturers have been extended licenses by my clients and substantial numbers of B eliminators and socket power devices have been manufactured and sold under the licenses thus granted. There are a number of applicants for prospective licenses at the present time under consideration by my clients and attention has been called to the fact that apparently a conflicting patent situation exists as licenses for the manufacture of socket power devices are also being offered by Radio Corporation of America.

I would like to inquire whether it is the policy to protect and save harmless the licensees under the socket power licenses extended by Radio Corporation of America from attacks by other patentees. My clients would greatly appreciate having your view as to the extent of liability assumed by a licensee of Radio Corporation of America on socket power devices. If Radio Corporation of America, in granting a socket power license, guarantees its licensees immunity from suits under other outstanding patents in the art, then the policies of my clients can be formulated with much greater precision.

I would certainly appreciate it if you will favor me with a copy of the form of socket power license offered by Radio Corporation of America.

Yours very truly,

JBB/hir

PLAINTIFFS' EXHIBIT NO. 46.

Photograph of Lowell & Dunmore Box Type Radio Set. This Exhibit is the same the plaintiffs' Exhibit 47 and is printed on page 253, Vol. II (Book of Exhibits).

PLAINTIFFS' EXHIBIT NO. 47.

Photograph of Lowell & Dunmore Neutrodyne Set. This Exhibit is the same as plaintiffs' Exhibit 49 and is printed on Page 255, Vol. II (Book of Exhibits).

PLAINTIFFS' EXHHIBIT NO. 48.

Lowell & Dunmore Box Type Set. This Exhibit is the same as plaintiffs' Exhibit 26. By stipulation of Counsel Vol. I, Page 281, this Exhibit is treated as a Physical Exhibit.

PLAINTIFFS' EXHIBIT NO. 49.

Lowell & Dunmore Neutrodyne Set. This exhibit is the same as plaintiffs' Exhibit 27. By stipulation of Counsel Vol. I, page 281, this exhibit is treated as a Physical Exhibit.

PLAINTIFFS' EXHIBIT NO. 49a.

Rectifying Unit for Lowell & Dunmore Neutrodyne Set. This Exhibit is the same as plaintiffs' Exhibit 28. By stipulation of Counsel Vol. I, page 281, this exhibit is treated as a Physical Exhibit.

PLAINTIFFS' EXHIBIT NO. 50.

Original Diagram of Lowell-Dunmore Box Type Set. This Exhibit is the same as plaintiffs' Exhibit 50, Volume II, page 258 (Book of Exhibits).

PLAINTIFFS' EXHIBIT NO. 51.

(Copy)

AGREEMENT

This agreement made this 1st day of June, 1922, between F. W. Dunmore and P. D. Lowell, both of Washington, D. C., parties of the first part, and the Radio Instrument Company, incorporated under the laws of the State of Delaware, party of the second part, WITNESSETH:

That whereas the parties of the first part have made application in the United States Patent Office for letters patent, application Serial No. 541,111, filed March 27, 1922, for improvement in radio receiving apparatus, and whereas the party of the second part is desirous of manufacturing radio apparatus containing the said improvements and of securing the services of the parties of the first part, now therefore, the parties have agreed as follows:

I. The parties of the first part hereby license and empower the party of the second part to manufacture, subject to the conditions hereinafter named, at Washington, D. C., or in other places, to the end of the term for which said letters patent may be granted, apparatus containing the said improvements and to sell the same. The parties of the first part further agree that they will make application for letters patent on the invention identified by the application S. N. 541,111 in foreign countries at the request of the party of the second part and that rights secured shall be subject to the same royalty agreement as hereinafter provided. It is understood, however, that all expenses incident to obtaining patents in foreign countries shall be paid by the party of the second part.

II. Mr. P. D. Lowell, one of the parties of the first part, agrees to enter the employ of the party of the second part at a salary of $75 per week, his employment to begin on or before the 1st day of July, 1922, and he further agrees that he will continue in said employment

for a period of six months from date, and will devote himself exclusively to the development of the improvements covered by the said application S. N. 541,111.

III. It is understood that this contract is not to become binding on any of the parties hereto unless the sum of One Thousand Dollars ($1,000.00) shall have been paid to the parties of the first part by the party of the second part, said One Thousand Dollars ($1,000.00) to be an advance payment on any royalties which may accrue during the first six months as provided in Section II.

IV. The party of the second part agrees to pay to the parties of the first part until such time as letters patent shall be issued upon application S. N. 541,111, a royalty of one per cent (1%) of the gross sales price for each instrument manufactured and sold by the party of the second part, provided that such royalty is not to be less than Two Dollars ($2.00) per instrument. From the date of the issuance of the letters patent upon the said application S. N. 541,111, the royalty fee due from the second party to the first parties for each instrument manufactured and sold by the second party shall be increased to five per cent (5%) of the gross selling price of the instrument; Provided, however, that such royalty shall not exceed $7.50 per instrument. All royalties due to the parties of the first part shall be paid on or before the 10th day of each month.

V. It is further agreed that if, within six (6) months from the date of this agreement the party of the second part shall so request, the parties of the first part shall transfer and make over to the party of the second part the exclusive domestic and foreign rights upon the same terms as to royalties to manufacture and sell the instrument which is the basis of application S. N. 541,111, provided that the second party six (6) months after the date of this agreement shall pay to the said first parties either Ten Thousand Dollars ($10,000.00) at the rate of Two Thousand Dollars ($2,000.00) cash and Two Thousand Dollars ($2,000.00) every thirty days for four months, or two hundred (200) shares of the preferred capital stock and one hundred (100) shares of the common capital stock of the second party, as the first parties shall elect. In case, however, the party of the second part does not

elect to exercise its option to purchase the exclusive right by payment of the Ten Thousand Dollars ($10,000.00) cash or stock as provided in the foregoing paragraph, the parties of the first part agree that the party of the second part may continue to manufacture on a non-exclusive basis the instrument which is the basis of application S. N. 541,111 upon the same terms and conditions as to royalties as herein provided. When the patent issues on application S. N. 541,111, the Radio Instrument Company agrees that each instrument sold shall be conspicuously marked by a plate or otherwise substantially marked as follows:—"Licensed under Lowell-Dunmore U. S. Patent No. ..... date."

VI. It is agreed by the party of the second part that in order to maintain their exclusive or non-exclusive license, they will manufacture annually a minimum of one thousand (1,000) instruments to net to the parties of the first part a minimum of Two Thousand Dollars ($2,000.00) in annual royalties, or in case they are unable to manufacture that number of instruments they agree to pay a minimum amount of Two Thousand Dollars ($2,000.00) to the parties of the first part each year, and upon failure to do so it is understood that the license shall automatically revert to the parties of the first part.

VII. It is agreed by the party of the second part that in case it takes over the exclusive patent rights as provided in Section V they will pay all expenses of litigation that may arise in connection with establishing the validity of the patent.

VIII. The party of the second part shall make full and true returns to the parties of the first part under oath upon the 10th day of each month of all apparatus containing the improvements for which letters of patent have been applied. Should the parties of the first part so desire, they may at any time in regular business hours examine the books and records of the second *part* to check the manufacture and sales made of the instruments covered by this license.

IX. Upon a failure of the party of the second part to make returns or to make payment of license fees, as herein provided, for sixty (60) days after the 10th day of each month, the parties of the first part may terminate this license by serving a written notice upon the

party of the second part, but the party of the second part shall not thereby be discharged from any liabilities to the parties of the first part for any license fees due at the time of the serving of the notice.

X. It is understood that unless the One Thousand Dollars ($1,000.00) advance payment on royalties as provided in Section III is not paid by the party of the second part to the parties of the first part on or before Saturday, June 10th, 1922, the parties of the first part shall consider this contract void and of no effect, unless extension is granted upon the same terms.

IN WITNESS WHEREOF the parties here above named have hereunto set their hands and seals the day and year first above written at Washington, D. C.

Radio Instrument Co.

By Brent Daniel.

Percival D. Lowell

Francis W. Dunmore

(SEAL)

XI. The parties of the first part hereby agree to extend the time limit mentioned in paragraph X from June 10, 1922 to June 24, 1922.

Radio Instrument Co.

By Brent Daniel.

Percival D. Lowell

Francis W. Dunmore.

PLAINTIFFS' EXHIBIT NO. 52.

WESTINGHOUSE ELECTRIC & MANUFACTURING COMPANY

East Pittsburgh, Pa.

Office of
O. S. Schairer,
Director of
Patent Development

Mr. John B. Brady,
Ouray Building,
Washington, D. C.

July 31st, 1923.

Dear Mr. Brady:—

I have your letter of July 23rd, directing our attention to Lowell et al. patent No. 1,455,141.

As you know, we have already looked into this patent and have sent you a copy of the file wrapper. Our purpose in doing this was to determine whether or not we could properly make certain of the claims of the Lowell patent in a pending application of ours that has been in the Office for several years. It is our opinion that this pending application discloses every material part of the invention claimed in the Lowell patent. For this reason, it is not likely that we shall be interested in the patent in question unless it should appear that Lowell and Dunmore are able to establish a date of invention several years prior to the filing date of their patent.

Thanking you for having given us an opportunity to consider this matter, I am,

Very truly yours,

C. T. ALLCUTT,
Bureau of Patent Development.

CTA/JMc

John B. Brady
Received
Aug 2 1923
Washington, D. C.

PLAINTIFFS' EXHIBIT NO. 52-A.

July 23, 1923.

Bureau of Patent Development,
Westinghouse Electric & Mfg. Co.,
East Pittsburgh, Pa.

Gentlemen:

When your company first actively started to construct a radio patent situation, I was called upon to extend you assistance which may special collection of radio patents afforded at that time. Since then Messrs. Dunmore and Lowell, clients of mine, have called upon me to construct a patent situation upon their invention in a radio receiver which uses the alternating current house lighting circuit to energize the filament and plate circuits of the electron tube receiving amplifier. Patent 1,455,141 was granted to them showing one circuit arrangement for a receiver of this kind. I have been called upon to arrange licenses in response to a number of applicants for the manufacture of receivers using the house lighting circuit as the source of supply for the tubes.

My clients agree as a result of my suggestion that your company having been the first to establish radio broadcasting on a permanent basis should be given an opportunity to investigate this situation before too many non-exclusive licenses have been executed. I am therefore writing you to invite any representative of your patent department, either from East Pittsburgh or Washington, to examine one of these house lighting circuit receivers in operation some evening in Washington.

I understand that you have examined the file wrapper of the above referred to patent and you are therefore familiar with the scope of the invention as thus far protected. Briefly this new receiver does not require primary or secondary batteries and enables power amplification tubes to be used giving amplification not possible with dry cell tubes. No storage batteries with chargers and all inherent difficulties are required. In short this receiver is the ultimate in that it can be installed in the home using a small loop and merely a plug connection

to the electric light socket. The hum of the alternating current is eliminated in this receiver. Standard three electrode tubes are used. It is not necessary with this receiver to go to special tubes which use an auxiliary filament heated from the A. C. source which filament in turn heats the electron emitting body as developed by your engineers.

These inventors have had in mind that the general public must be considered as laymen and that in order to sell them a radio receiver for home entertainment, the apparatus must require practically no connections nor skill in operation. This is accomplished in the present receiver, the loop being wired with the set, and a single control provided for tuning and a flexible cord with a screw plug adapter at the end thereof which plugs into an electric light socket in the same manner that a layman understands how a vacuum cleaner, fan or iron is to be plugged into a socket.

Will you please advise me whether you are interested in this situation and care to have your representative examine the receiver.

Yours very truly,

JBB:DMS

PLAINTIFFS' EXHIBIT NO. 53.

Pages 242-246, Inclusive, Transactions of American Institute of Electrical Engineers, April, 1922, "A Relay Recorder for Remote Control by Radio," by F. W. Dunmore. This Exhibit is the same as plaintiffs' Exhibit 53 printed at page 259 of Vol. 2 (Book of Exhibits).

PLAINTIFFS' EXHIBIT NO. 54.

Page 441, Radio News for September, 1922, "Discarding Storage Batteries," by S. R. Winters. This Exhibit is the same as plaintiffs' Exhibit 21 printed at page 243, Vol. II (Book of Exhibits).

PLAINTIFFS' EXHIBIT NO. 55.

Pages 501-505, Inclusive, The Electrical Journal, December, 1922, "A Practical Alternating Current Radio Receiving Tube," by H. M. Freeman. This Exhibit is the same as plaintiffs' Exhibit 55. By stipulation of Counsel this exhibit is treated as Physical Exhibit. See stipulation Vol. I, page 292.

PLAINTIFFS' EXHIBIT NO. 56.

Pages 32-35, Inclusive, Q S T, October, 1922, "Amplifier Operation From A. C. Supply," by P. D. Lowell. This Exhibit is the same as plaintiffs' exhibit 21 and is printed at pages 239-241, Vol. II (Book of Exhibits).

PLAINTIFFS' EXHIBIT NO. 57.

Pages 21, 22, Telephone, September 16, 1922, Vol. 83, No. 12, "Batteryless Radio Receiving Set," by P. D. Lowell. This exhibit is the same as plaintiff's exhibit 21 and is printed at pages 245-247, Vol. II (Book of Exhibits).

PLAINTIFFS' EXHIBIT NO. 58.

Pages 27, 28, "Radio" for September, 1922, "An Amplifier With A. C. Filament and Plat Supply," by P. D. Lowell. This exhibit is the same as plaintiffs' exhibit 21 and is printed at pages 233-235, Vol. II (Book of Exhibits).

PLAINTIFFS' EXHIBIT NO. 59.

Radio News for November, 1922, pages 838, 839, 1001, 1002, "Radio Messages Typed Automatically From Airplane to Ground," by S. R. Winters. This exhibit is the same as plaintiffs' exhibit 59 and is printed at pages 275-282, Vol. II (Book of Exhibits).

DEFENDANTS' EXHIBIT NO. 1.

Time Cards, monthly reports and laboratory note book of Francis W. Dunmore. This exhibit is the same as plaintiffs' exhibit 14. By stipulation of Counsel printed at page 292, Vol. I of record this Exhibit is certified as a physical exhibit.

DEFENDANTS' EXHIBIT NO. 7.

Memorandum of January 9, 1922, Lowell to Dellinger. This memorandum is included in the Time cards, monthly reports and laboratory note book of Percival D. Lowell constituting plaintiffs' Exhibit 83. By stipulation of Counsel this Exhibit is certified as a Physical Exhibit, Vol. I, Page 292.

MEMORANDUM.

By stipulation of Counsel the following exhibits referred to in the proffer of proof under rule 46 are here omitted, the same being treated as physical exhibits.

DEFENDANTS' EXHIBIT NUMBERS.

11 R C A Radiola 16 Service Notes
12 R C A Radiola 18 Service Notes
13 R C A Radiola 60 Service Notes

(Style of Court and Title Omitted.)

STIPULATION AS TO DEFENDANTS' EXHIBITS 11, 12 AND 13 REFERRED TO IN PROFFER OF EVIDENCE UNDER RULE 46 AS COVERED BY ITEM 3 IN STIPULATION AS TO RECORD ON APPEAL IN THIS CASE AND ADDENDUM TO TRANSCRIPT OF RECORD.

Filed 13th December, 1934.

(Style of Court and Title Omitted.)

It is hereby stipulated and agreed by and between counsel for the parties hereto that in lieu of the reproduction

in the printed record of defendant's Exhibits 11, 12 and 13 referred to in plaintiff's proffer of proof under Rule 46 in the instant case, that Exhibits 11, 12 and 13 may be treated as physical exhibits, providing, however, that any party hereto so desiring may submit to the Circuit Court of Appeals at the time of the argument of the above appeal three (3) copies of any of said Exhibits 11, 12 and 13.

And it is further stipulated and agreed by and between counsel that the Clerk of the District Court shall make up an addendum to the transcript of record and include therein the proffer of evidence offered under Rule 48, together with the exhibits referred to therein and shall certify the same accordingly

SEMMES, BOWEN & SEMMES,

By GAYLORD LEE CLARK,
Solicitor for Appellants.

C. V. EDWARDS, of Counsel,
COOK AND MARKELL,
CHAS. MARKELL,
Solicitors for Appellees.

SAMUEL E. DARBY, JR., of Counsel,

SEMMES, BOWEN & SEMMES,

By GAYLORD LEE CLARK,
Solicitors for Cross-Appellees.

C. V. EDWARDS, of Counsel,
COOK AND MARKELL,
CHAS. MARKELL,
Solicitors for Cross-Appellees.

SAMUEL E. DARBY, JR., of Counsel.

CLERK'S CERTIFICATE.

UNITED STATES OF AMERICA,

DISTRICT OF MARYLAND, To wit:

I, Arthur L. Spamer, Clerk of the District Court of the United States for the District of Maryland, do hereby certify that the foregoing is a true copy of Plaintiffs' Proffer of Evidence under Rule 46, together with the Exhibits therein referred to, which was offered at the trial of the case of Percival D. Lowell, Francis W. Dunmore and Dubilier Condenser Corporation, Plaintiffs, vs. A. G. Triplett, R. M. Triplett, A. Nelson, C. M. Triplett, Jr., and The Baltimore Gaslight Company, Defendants, No. 2193 Equity Docket in said District Court and which are now being certified as an Addendum to the Transcript of Record in the case entitled Percival D. Lowell, et al.; Appellants and Cross-Appellees, versus A. G. Triplett, et al., Appellees and Cross-Appellants, pending in the United States Circuit Court of Appeals for the Fourth Circuit.

In Testimony Whereof, I hereunto set my hand and affix the seal of said District Court this 17th day of December, 1934.

ARTHUR L. SPAMER,

(Seal) Clerk of said District Court.

December 20, 1934, the appearance of Gaylord Lee Clark is entered for the appellants and cross-appellees.

Same day, twenty-four copies of Volume One of the printed record are filed.

Same day, ten copies of Volume Two of the printed record are filed.

Same day, twenty-four copies of the printed addendum to the transcript of record are filed.

December 22, 1934, the appearance of Chas. Markell is entered for the appellees and cross-appellants.

January 4, 1935, stipulation as to the time for the filing of the respective briefs is filed.

February 2, 1935, original exhibits are certified up.

ARGUMENT OF CAUSE

February 7, 1935 (January term, 1935), cause came on to be heard before Parker and Soper, Circuit Judges, and McClintic, District Judge, and is argued by counsel and submitted.

OPINION—Filed June 3, 1935

UNITED STATES CIRCUIT COURT OF APPEALS, FOURTH CIRCUIT

No. 3816

(Argued February 7, 1935. Decided June 3, 1935)

PERCIVAL D. LOWELL, FRANCIS W. DUNMORE and DUBILIER CONDENSER CORPORATION, Appellants and Cross Appellees,

versus

A. G. TRIPLETT, R. M. TRIPLETT, A. NELSON, C. M. TRIPLETT, JR., and THE BALTIMORE GASLIGHT COMPANY, Appellees and Cross Appellants

Cross-Appeals from the District Court of the United States for the District of Maryland, at Baltimore. In Equity

Before Parker and Soper, Circuit Judges, and McClintic, District Judge

Clifton V. Edwards (Gaylord Lee Clark and John B. Brady on brief) for appellants and cross-appellees, and

Samuel E. Darby, Jr. (Cook & Markell on brief), for appellees and cross-appellants.

SOPER, Circuit Judge:

The three United Sates patents involved in this suit, namely, Lowell and Dunmore, No. 1,455,141, Dunmore, No. 1,635,117, and Dunmore and Lowell, No. 1,606,212, were involved in three earlier suits in the District Court of Delaware, Dubilier Condenser Corporation et al. vs. Radio Corporation of America, 34 F. (2d) 450, wherein it was held that the first two patents were valid and infringed, and that the third patent was not infringed. Plaintiffs did not appeal from the adverse decision upon the third patent, but the Radio Corporation of America prosecuted appeals from the favorable decisions on the other patents; and the Circuit Court of Appeals for the Third Circuit reversed the decree of the District Court as to these patents, and held the claims involved, to wit, claims 3 and 14 of patent No. 1,455,141, and claim 9 of patent No. 1,635,117, to be invalid as covering mere aggregations devoid of invention and unpatentable in view of the prior art. Radio Corp. vs. Dubilier Condenser Corp., 59 F. (2d) 305, 309. On October 25, 1932, certiorari was denied by the Supreme Court as to patent No. 1,455,141, because it was not applied for in time, and as to patent No. 1,635,117 without statement of reason. (287 U. S. 647, 650.)

The claims in suit in the pending case are claims 1 to 4 and claims 13 and 14 in patent No. 1,455,141; claims 9, 11 and 12 of patent No. 1,635,117, and claims 1 to 9 in patent No. 1,606,212.

The nature of the devices is fully described in the opinion of Judge Morris in the District Court of Delaware. For our present purposes, it is sufficient to say that all of the patents in suit relate to the use in radio receiving sets of alternating current from an ordinary household lighting circuit, in lieu of direct current from A and B batteries and storage cells. The standard 110 volt alternating current, used for lighting purposes, has a frequency of 60 cycles per second, and these continual reversals or alternations produce a distortion of modulation, and a strong

hum in the sound ouput of a radio receiving set, that make the reception unsatisfactory. The elemination of these disadvantages was the problem which the patentees sought to solve.

In patent No. 1,455,141, eliminating means are disclosed for the radio frequency amplifier portion, the detector portion and the audio frequency amplifier portion, into which the receiver is divided. Patent No. 1,635,117 relates to the operation of the audio frequency amplifier by alternating current. The immediate application of the patent is in connection with a device for the radio operation of telegraph instruments, but the patent points out the use of the amplifier in radio receivers. Patent No. 1,606,212 relates to the use of an audio frequency amplifier and loud speaker operated by alternating current. A coil armature and an electro magnetic field coil are used, and the patent teaches that the hum can be eliminated by the relation in which the windings of these coils are connected.

On July 8, 1933, more than eight months after the denial of the petitions for writs of certiorari by the Supreme Court, the plaintiff filed in the Patent Office a disclaimer with respect to certain claims of patent No. 1,455,141 including claims 3 and 14, which had been held invalid in the Third Circuit, and also a disclaimer with respect to certain claims of patent No. 1,635,117, including claim 9, which had also been held invalid. None of the invalidated claims were cancelled by the disclaimers. The purpose of the disclaimers was to ensure that the broad language of the claims would be given more definite meaning by reference to the disclosures of the patent so as to cover what is there described, or the equivalent thereof, in accordance with the well established rule that in interpreting the language of a claim, the words are not to be taken literally but in the sense in which they were used by the inventor as disclosed in his specification. Elevator Supplies Co. v. Graham & Norton Co., 44 F. (2d) 354; Westinghouse v. Boyden Power Brake Co., 170 U. S. 537, 568, 569.

The bill of complaint in the present suit was filed on August 17, 1933, against alleged infringers, who were not parties to the suit in the Third Circuit, in order to obtain

another hearing upon the merits of these claims, and to secure a decree upholding their validity. When the case was called for trial, defendants moved to dismiss the bill as to the first two patents in suit on the ground that the disclaimers had not been filed within a reasonable period after the final adjudication in the Third Circuit, as required by the provisions of the federal statutes, R. S. Sections 4917 and 4922, 35 U. S. C. A. 65, 71. The gist of these sections and the interpretation to be placed upon them is thus set out in Ensten v. Simon, Ascher & Co., 282 U. S. 445, 450, 452, 453:

"The first of these sections provides in substance that whenever, through inadvertence, accident, or mistake, and without any fraudulent or deceptive intention, a patentee has claimed more than that of which he was the original or first inventor or discoverer, he may be permitted to make disclaimer of such parts of the thing patented as he shall not choose to claim or hold by virtue of his patent. The other permits the patentee to maintain a suit on his patent, although through inadvertence, accident, or mistake, and without any wilful default or intention to mislead the public, he has claimed some material or substantial part as an invention of which he was not the original or first inventor. He is deprived, however, of the right to recover costs, unless he has filed proper disclaimer before commencement of his suit. And it further provides: "But no patentee shall be entitled to the benefits of this section if he has unreasonably neglected or delayed to enter a disclaimer."

* * * * * * *

"Under the early accepted general rule a patent with an invalid claim was wholly void, and this defect effectually barred suit upon it. Congress undertook to modify this * * *. The two sections "are parts of one law, having one general purpose, and that purpose is to obviate the inconvenience and hardship of the common law which made a patent wholly void if any part of the invention was wrongfully claimed by the patentee, and which made such a defect in a patent an effectual bar to a suit brought upon it." * * * Construed together they "enact that where a pat-

entee claims materially more than that which he was the first to invent, his patent is void, unless he has preserved the right to disclaim the surplus; and that he may fail to preserve that right, by unreasonable neglect or delay to enter a disclaimer in the Patent Office."

* * * * * * *

"The statute is remedial; the intent is to aid the inventor free from wilful default or intention to mislead the public by permitting him to avoid the consequence of inadvertence, accident or mistake through prompt disavowal of the apparent right to exclude others from something improperly included in the words of his grant. Escape is permitted only to one who acted originally in good faith and who has complied with the prescribed conditions."

"The same principle which forbids a patentee to assert a right to more than he has actually invented compels him to disavow the right as soon as he discovers that it has been unjustly claimed. Unreasonable delay in disclaiming is thus tantamount to an original fraudulent claim, and through it the patentee loses the privilege of making the amendment by which alone his patent could be saved. The question of unreasonable delay is a question for the court, upon the facts as found either by its own investigation or the verdict of a jury. Delay begins whenever the patentee becomes aware that he has claimed more than he has invented or described."

The motion to dismiss was denied by the District Judge, since, in his opinion, the delay was not unreasonable in view of the mass of prior litigation affecting the patents and the complexity of the subject matter. This ruling is challenged in view of decisions more fully discussed in an opinion of this court filed May 1, 1935, in The General Chemical Company v. Standard Wholesale Phosphate and Acid Works, which indicate that disclaimers should be promptly filed. However this may be, the ruling was not prejudicial to the defendants because of the final disposition of the case. Subsequently, the defendants amended their answer raising the defense that the two patents are invalid, not only on account

of the unreasonable delay in filing the disclaimers, but also because the disclaimers were inadequate. On the latter ground, the defendant again moved the court to dismiss the bill as to these two patents. During the discussion that followed, the plaintiff made an offer of proof in written form, under Equity Rule No. 46, in regard to these patents, and this was filed; but the District Judge, being of the opinion that the disclaimers were inadequate, granted the motion to dismiss. He rested his conclusion primarily on the ground that when a court of the United States is prima facie satisfied that a matter has been thoroughly litigated in another circuit and has been correctly decided by the Court of Appeals thereof, and certiorari has been refused by the Supreme Court, the decision should be accepted as binding, and the court should not be required to consider the same testimony, and perhaps some additional testimony, merely to afford the losing party an opportunity to persuade another tribunal to reach a different conclusion. The District Judge, having studied the opinion of the Third Circuit and believing it to be sound, declined to receive the proffered testimony and dismissed the bill as to the two patents.

In this action, there was, in our view, prejudicial error, for without expressing any opinion as to the merits of the patents in suit, we think that the plaintiff was entitled to present its case for the consideration of the judge in the usual manner, and to secure from him the exercise of his individual judgment, taking into consideration, of course, the light thrown on the subject by the earlier decisions, but deciding the case according to his own convictions. Such a course would require not merely a careful study of the prior decisions, but a hearing de novo of the evidence offered and a determination based thereon.

The following observation upon the weight to be given by one circuit to the prior decisions of another, was made by the Supreme Court in Mast, Foos & Co. v. Stover, 177 U. S. 485, 488, a suit upon a patent:

"Comity is not a rule of law, but one of practice, convenience and expediency. It is something more than mere courtesy, which implies only deference to the opinions of others, since it has a substantial value in securing uni-

formity of decision, and discouraging repeated litigation of the same question. But its obligation is not imperative. If it were, the indiscreet action of one court might become a precedent, increasing in weight with each successive adjudication, until the whole country was tied down to an unsound principle. Comity persuades; but it does not command. It declares not how a case shall be decided, but how it may with propriety be decided. It recognized the fact that the primary duty of every court is to dispose of cases according to the law and the facts; in a word, to decide them right. In doing so, the judge is bound to determine them according to his own convictions. If he be clear in those convictions, he should follow them. It is only in cases where, in his own mind, there may be a doubt as to the soundness of his views that comity comes in play and suggests a uniformity of ruling to avoid confusion, until a higher court has settled the law. It demands of no one that he shall abdicate his individual judgment, but only that deference shall be paid to the judgments of other coordinate tribunals. Clearly it applies only to questions which have been actually decided, and which arose under the same facts."

See also Sanitary Refrig. Co. v. Winters, 280 U. S. 30, 35. To the same effect is the following statement of this court in Imperial Bottle Cap & Machine Co. v. Crown Cork & Seal Co., 139 F. 312, 313:

"* * * The parties before us have the right to our individual judgment, and considerations of convenience and expediency must give way to demands of duty, from which we cannot be absolved by the doctrine of comity."

It follows, that the case as to these two patents must be remanded to the District Court for further proceedings, unless the dismissal of the bill as to them can be sustained on some other ground. The defendants urge, as a sufficient reason for the dismissal, that the disclaimers were not filed within a reasonable time after the denial of the writs of certiorari, 8 months and 13 days having intervened; and also that apart from the delay, the papers actually filed were entirely inadequate for the purpose.

We may assume, for the purposes of the pending case, that in effect no disclaimer has been filed as to the claims passed on in the Third Circuit, for even if the delay of 8 months is satisfactorily accounted for, the plaintiff admits, as the defendants contend and the District Judge held, that the so-called disclaimers disclaimed nothing and amounted only to an admission that the broad language of the claims should be limited to the disclosures of the specifications, in accordance with the well established rule.

Stated broadly, the proposition of the defendants means that a decision of invalidity, with respect to a claim of a patent in one federal circuit, is conclusive as to that claim, because the patent may never again form the subject matter of a suit unless a disclaimer as to the particular claim has been filed within a reasonable time after the adverse decision. The defendants contend that this result necessarily follows from the interpretation given to the disclaimer statutes by the Supreme Court in Ensten v. Simon, Ascher & Co., supra, and by other courts in R. Hoe & Co. v. Goss Printing Press Co., 31 F. (2d) 565; Radio Condenser Co. v. General Ins. Co., 65 F. (2d) 458; Emery v. J. G. McCrory Co., 4 F. Supp. 167. The patent considered by the Supreme Court in Ensten v. Simon, Ascher & Co., supra, had been previously litigated in the District Court of the Northern District of Ohio, which had held that claims 1, 3, 4, and 5 of the patent were valid and infringed, but that claim 2 was invalid. On appeal by the defendants as to the ruling on the first mentioned claims, the decree was affirmed, but no appeal was taken by the plaintiff as to the adverse ruling on claim 2. More than six months after the mandate was issued from the Circuit Court of Appeals, and 23 months after the decision of the District Court, a disclaimer was filed. Later, a bill based on the same patent against another defendant was presented to the District Court of the Southern District of New York, and the bill was dismissed because of unreasonable delay in filing the disclaimer. This decree the Supreme Court affirmed, pointing out that the owner of the patent might have appealed from the adverse decision on claim 2 and thus have secured an early determination of his rights, but instead of doing this, he con-

tinued to hold himself out as the sole possessor of the patent right for nearly 2 years, and then abandoned it. Thereby he failed to bring himself within the protection of the statute. It will be observed that in contrast with the admission of invalidity in this case, the owner of the patents in the pending case has made no concession of invalidity, all parties agreeing that the disclaimers left the matter in the same situation as if no disclaimer had been filed. The plaintiffs insist upon the validity of the claims and base their suit in part thereon.

In R. Hoe & Co. v. Goss Printing Press Co., supra, the Circuit Court of Appeals had previously decided (30 F. (2d) 271), that one claim of a patent was valid and ten claims were invalid, and the plaintiff had applied for an interlocutory decree on the valid claim in the District Court. Thereupon the defendant demanded that the plaintiff file a disclaimer as to the other claims as a condition of proceeding, and on defendant's motion, the Circuit Court of Appeals amended its mandate so as to require a disclaimer. The court said that the patentee could not wait until he had an opportunity to test the validity of the invalidated claims in another circuit; for this might conceivably postpone the filing of the disclaimer until all nine circuits had passed on the subject, and thereby extend the period unreasonably. The practical effect of this decision is that when a claim of a patent has been finally decided to be invalid in a federal circuit, the owner of the patent may not proceed further in that circuit in the same case or in any other case based upon the patent, unless he promptly files a disclaimer, for all doubt as to the invalidity of the claim will have been settled so far as that circuit is concerned.

In Radio Condenser Co. v. General Ins. Co., 65 F. (2) 458, the right to sue on a counterclaim based on certain claims of two patents was held to have been properly denied by the District Court for the Southern District of New York, because several years previously, these claims had been held invalid in interference proceedings in the Patent Office, and in the interval, the patentee had neither taken an appeal nor attempted otherwise to litigate the patent, nor filed disclaimers.

In Emery v. J. G. McCrory Co., 4 F. Supp. 167, certain claims of a patent sued on in the Eastern District of New York had previously been held invalid in a suit in the Sixth Circuit, and while the latter suit was pending, a suit had been started by the plaintiff on the same patent in the Southern District of New York, during the pendency of which the suit at bar was commenced. Later, the suit in the Southern District of New York was dismissed for want of prosecution. The District Court held, upon the authority of R. Hoe & Co. v. Goss Printing Press Co., supra, that the suit must fail because a disclaimer had not been filed; but it was intimated that the result might have been different if the suit in the Southern District of New York had not been dismissed.

It is established by the decision of the Supreme Court in the Ensten case, that if the owner of a patent has become aware, through adverse decision or other means, that a claim of his patent is void, and fails to file a disclaimer thereof within a reasonable time, he is in the position of one who, with knowledge of the invalidity, has failed to relieve the public of the evil effects of a false and misleading assertion, and he may not thereafter bring suit on any other claim of the patent, even though it be good, for the whole patent has become void. In conformity with this rule, the practice has been adopted in a number of federal circuits, in the event of an adverse decision upon the claim of a patent in a case on trial, to require the filing of a disclaimer of the void claim within 30 or 60 days, as a condition of proceeding further in the case upon the valid claims. Herman v. Youngstown Car Mfg. Co., 191 F. 579; Higgin Mfg. Co. v. Watson, 263 F. 378, 387; Excelsior, &c., Co. v. Williamson Heater Co., 269 F. 614, 619; Liquid Carbonic Co. v. Gilchrist, 253 F. 54; R. Hoe & Co. v. Goss Printing Press Co., 31 F. (2d) 565. The courts in the Second Circuit have also had occasion, as in Radio Condenser Co. v. General Ins. Co., supra, to apply the rule to a case in which a patentee has acquiesced in an adverse decision upon a petition in one jurisdiction, and has thereafter, without filing a disclaimer, attempted to relitigate the patent in another jurisdiction after an unexplained delay of several

years; and these courts have held that under these circumstances, the latter suit was barred.

These decisions, however, do not, in our opinion, control the pending case or require the dismissal of the bill of complaint. Here the owner of the patent made no concession of invalidity of the claims, even in the disclaimers filed on July 8, 1933; but, on the contrary, within a month thereafter, reasserted the validity of the claims in the pending suit. We do not think that the owner of a patent, who desires, after an adverse decision thereon, to obtain the decision of another court, is to be held to the same rigid rule as to prompt action, as is required for the filing of a disclaimer as to a claim which he concedes to be invalid. In the ordinary case, the owner of a patent can, without difficulty, determine whether or not to file a disclaimer within a relatively short time, for all the circumstances necessary for the decision are immediately available. On the other hand, when he is unwilling to disclaim and desires to obtain the determination of a court of another jurisdiction upon the questions involved, by suit against another infringer, a longer period may reasonably be taken without the loss of the patent rights. We are unable to say in the pending case that the interval which elapsed between the denial of certiorari by the Supreme Court in Radio Corporation v. Dubilier Condenser Corporation, supra, and the filing of the pending suit was so unreasonably long as to destroy the privilege of a second trial in another court.

The mere filing of a disclaimer does not involve the admission that the patent is void if the disclaimer is not adequate. Permutit Co. v. Wadham, 13 F. (2d) 454; Permutit Co. v. Harvey Laundry Co., 279 F. 713; National Food Products Co. v. C. H. Musselman Co., 8 F. Supp. 994; Metropolitan Device Corp. v. Cleveland Elec. Ill Co., 36 F. (2d) 477; Seiberling v. John E. Thropp's Sons Co., 284 F. 746. If the owners of the patents in the pending case are correct in their contentions, (notwithstanding the decision of the Third Circuit), that claims 3 and 14 of patent No. 1,455,141, and claim 9 of No. 1,635,117 are valid, and that no disclaimers were necessary under the law to save the patents, it is immaterial that disclaimers which contain no concession of

invalidity were in fact filed, for no one was prejudiced thereby. Carnegie Steel Co. v. Cambria Iron Co., 185 U. S. 403, 435, 436. Compare Altoona Publix Theatres, Inc. v. American Tri-Ergon Corporation, 55 Sup. Ct. 455, 462. On the other hand, if the decision of the Third Circuit should be followed in the pending case, the plaintiff's suit must fail on account of the inadequacy of the disclaimers, not only as to the claims held void in the previous case, but also as to all of the remaining claims, even though some of them may be good; for it would then be established that the owner of the patent had failed to file disclaimers within a reasonable time after notice of the invalidity of some of the claims had been brought home to him.

The long continued practice in patent cases is inconsistent with the defendants' contention that an adverse decision on any claim of the patent requires the prompt filing of a disclaimer thereof, with the result that it may never be litigated again. There are many cases in the books in which decisions adverse to a patent in one circuit have been followed by favorable decisions in another circuit, and generally it is well established that a decision in one circuit, while persuasive, is not binding on the courts of another in litigation upon the same patent between different parties. Mast, Foos & Co. v. Stover, 177 U. S. 485; Sanitary Refrig. Co. v. Winters, 280 U. S. 30, 35. In some of these cases, the original decision of invalidity has related to the entire patent, while in others, it has related to some of the claims only; but it is obvious that the principle underlying the right to litigate the patent again is the same in the first class as it is in the latter, for an adverse decision as to the entire patent should certainly be given as much weight as one in which only some of the claims have been invalidated. The only cases to which our attention has been called tending to show that a decision of invalidity in one circuit is conclusive in all, are hereinbefore cited. On the other hand, cases are listed in the note in which the Supreme Court has passed on the merits of patents first held invalid in one circuit, and later, held valid in another circuit; and also cases in the Circuit Court of Appeals where the patent was first held invalid in one circuit and later held valid in an-

other (omitting cases which reached the Supreme Court).* Numerous cases might also be cited in which one Circuit Court of Appeals has held a patent valid, and another Circuit Court of Appeals has later held the patent invalid.

The opportunity afforded the owner of a patent in these cases to litigate anew the claims of a patent previously held invalid, is analogous to the opportunity afforded a defendant accused of infringment of a patent previously held valid

---

* Cases in the Supreme Court prior to the establishment of the Circuit Courts of Appeals:

The Barbed Wire Patent, 143 U. S. 275, although no diversity of opinion existed in the lower Courts, indicates the practice prior to the Act establishing the Circuit Courts of Appeal.

The original patent had been held to be invalid by the Circuit Court for the Northern District of Illinois (Washburn and Moen v. Haish, 4 Fed. 900). The patent was then reissued and in Washburn & Moen Mfg. Co. v. Fuchs, 16 Fed. 661, 667, the Circuit Court for the Eastern District of Missouri held the reissue to be unwarranted and void. Suits were then brought upon the original patent in the Circuit Court for the Northern District of Iowa (Washburn & Moen Mfg. Co. v. Beat 'Em All Barbed Wire Co., 33 Fed. 261), the patent was again held invalid. The Supreme Court held the original patent to be valid.

Cases in the Supreme Court where the patent was held invalid by the Circuit Court of Appeals in one circuit, and later held valid by the Circuit Court of Appeals in another circuit:

Expanded Metal Co. v. Bradford, 214 U. S. 366. The patent was held to be invalid by the Circuit Court of Appeals for the Third Circuit (Bradford v. Expanded Metal Co., 146 Fed. 984). After the decree in the Circuit Court of Appeals for the Third Circuit plaintiff filed a bill against another defendant in the Northern District of Ohio. The District Court held the patent to be invalid on the authority of the case in the Circuit Court of Appeals for the Third Circuit (157 Fed. 564). On appeal the Circuit Court of Appeals for the Sixth Circuit reversed this finding and held

by the courts of another circuit to try again the issue of validity. It is conceded that this advantage still exists, and that in no case is an alleged infringer bound by the decisions in cases to which he was not a party. No reason has been suggested as to why a decision of invalidity should be given a finality denied to one favorable to the existence of the invention; and no distinguishing reason occurs to us. Not infrequently in the past, a patent first held invalid for lack of invention has ultimately been sustained; and it has been established that the first decision was in error. Obviously, similar mistakes may be made in the future, and so

---

the patent to be valid (Expanded Metal Co. v. General Fireproofing Co., 164 Fed. 849). On certiorari from the decree in the Sixth Circuit the Supreme Court held the patent to be valid.

Diamond Rubber Co. v. Consolidated Rubber Tire Co., 220 U. S. 428. The patent was held to be invalid by the Circuit Court of Appeals for the Sixth Circuit in Goodyear Tire & Rubber Co. v. Rubber Tire Wheel Co., 116 Fed. 363; also by the same Court in Rubber Tire Wheel Co. v. Victor Rubber Tire Co., 123 Fed. 85. In subsequent litigation the Circuit Court of Appeals for the Second Circuit held the patent to be valid. Consolidated Rubber Tire Co. v. Firestone Tire & Rubber Co., 151 Fed. 237; also in Consolidated Rubber Tire Co. v. Diamond Rubber Co., 162 Fed. 892. The Supreme Court held the patent to be valid.

Dowagiac Mfg. Co. v. Minnesota Moline Plow Co., 235 U. S. 641 did not involve the validity of the patent, but the Circuit Court of Appeals for the Sixth Circuit had held plaintiff to be entitled to defendant's entire profits. Brennan & Co. v. Dowagiac Mfg. Co., 162 Fed. 472. Subsequently the Circuit Court of Appeals for the Eighth Circuit held plaintiff to be entitled only to nominal damages. Dowagiac Mfg. Co. v. Minnesota Moline Plow Co., 183 Fed. 314. The Supreme Court, after stating the law, substantially followed the ruling of the Eighth Circuit but reversed the decree for special reasons.

Hanover Star Milling Co. v. Metcalf, 240 U. S. 403. A suit on the trademark "Tea Rose" was dismissed by the Circuit Court of Appeals for the Fifth Circuit (Metcalf

long as the burden is imposed upon the owner of the patent to sustain the validity thereof in every suit which he brings it does not seem just to deny him the corresponding privilege of testing more than once adverse decisions against him. With these considerations in mind, we are of the opinion that the disclaimer statutes should not be given the broad interpretation and effect for which the defendants contend and we conclude that the plaintiff was entitled to a trial of the issues raised as to the first two patents in the District Court, and that the case must therefore be remanded for further proceedings.

Evidence was taken as to the third patent, No. 1,606,212, in the District Court, and the conclusion was reached that

---

v. Hanover Star Milling Co., 204 Fed. 211). In a suit in the Seventh Circuit filed shortly before the decision in the Fifth Circuit, the Circuit Court of Appeals for the Seventh Circuit upheld plaintiff's rights in part (Hanover Star Milling Co. v. Allen and Wheeler Co., 208 Fed. 513). Because of a diversity upon fundamental questions the Supreme Court took both cases and decided the questions in dispute.

Railroad Supply Co. v. Elyria Iron Co., 244 U. S. 285. In copending cases the patent was held invalid by the Circuit Court of Appeals for the Sixth Circuit. Railroad Supply Co. v. Elyria Iron Co., 213 Fed. 789, and valid by the Circuit Court of Appeals for the Seventh Circuit. Railroad Supplies Co. v. Hart Steel Co., 222 Fed. 261. The Supreme Court held the patent invalid.

Abercrombie & Fitch Co. v. Baldwin, 245 U. S. 198. The original Letters Patent was held invalid by the Circuit Court of Appeals for the Seventh Circuit (Bleser v. Baldwin, 199 Fed. 133). The patent was then reissued and the reissue held void by the Circuit Court of Appeals for the Third Circuit (Grier Bros. v. Baldwin, 219 Fed. 735). The Circuit Court of Appeals for the Second Circuit then held the reissue patent to be valid (Baldwin v. Abercrombie & Fitch Co., 228 Fed. 895). The Supreme Court held the patent to be valid and subsequently (Simmons Co. v. Grier Bros. Co., 258 U. S. 82) upheld an application to reopen the case in the Third Circuit.

the patent was valid and infringed, and from the decree based thereon the defendant has appealed, so that the matter is before us for decision. The subject matter of this patent, however, is so closely allied with that of the other patents in suit that we deem it unwise to pass on its merits until the whole controversy is before us. The whole case will therefore be remanded to the District Court with leave to the parties to take testimony, including additional testimony as to patent No. 1,606,212, if they see fit, and with leave to the court to reaffirm or modify or reverse its former decree as to this patent after the evidence on all of the

---

T. H. Symington v. National Malleable Castings Co., 250 U. S. 383. The question was one of priority as between Emerick and Byers. The Circuit Court of Appeals for the Seventh Circuit held that Emerick was prior (Miner v. T. H. Symington Co., 229 Fed. 730). Subsequently the Circuit Court of Appeals for the First Circuit held Byers to be prior (National Malleable Castings Co. v. T. H. Symington Co., 230 Fed. 821). The Supreme Court held Byers to be the prior inventor.

Meccano, Ltd. v. John Wanamaker, 253 U. S. 136. The District Court in the Southern District of Ohio upheld the patent. The Circuit Court of Appeals for the Sixth Circuit (246 Fed. 603) reversed the District Court and held the patent invalid. Meanwhile suit had been brought in the Southern District of New York where a preliminary injunction was granted and an appeal was taken therefrom. After the decision of the Circuit Court of Appeals for the Sixth Circuit, motion was made before the Circuit Court of Appeals for the Second Circuit to dismiss the New York case. The Circuit Court of Appeals for the Second Circuit (Meccano, Ltd. v. John Wanamaker, 250 Fed. 250) denied the motion and subsequently (Meccano v. John Wanamaker, 250 Fed. 50), reversed the order granting a preliminary injunction, at the same time expressing the opinion that the patent was invalid. On certiorari the Supreme Court affirmed the Second Circuit, stating that the matter for review was "upon the preliminary order for injunction and we

patents has been taken, and the entire case presented for the final determination of the court.

Reversed and remanded for further proceedings.

DECREE—Filed and entered June 4, 1935

UNITED STATES CIRCUIT COURT OF APPEALS, FOURTH CIRCUIT

No. 3816

PERCIVAL D. LOWELL, FRANCIS W. DUNMORE and DUBILIER CONDENSER CORPORATION, Appellants and Cross-Appellees,

vs.

---

may go no further," and remanded the cause to the District Court for further proceedings.

New York Scaffolding Co. v. Chain Belt Co., 254 U. S. 32. After the Circuit Court of Appeals for the Eighth Circuit had held the patent to be invalid (New York Scaffolding Co. v. Whitney, 224 Fed. 452), and the Circuit Court of Appeals for the Third Circuit had held the patent to be invalid (New York Scaffolding Co. v. Liebel-Binney Construction Co., 243 Fed. 577), the Circuit Court of Appeals for the Seventh Circuit held the patent to be valid (Chain Belt Co. v. New York Scaffolding Co., 245 Fed. 747). The Supreme Court held the patent to be invalid.

John E. Thropp's Sons Co. v. Seiberling, 264 U. S. 320. The Circuit Court of Appeals for the Sixth Circuit held two claims invalid (Seiberling v. Firestone Tire & Rubber Co., 257 Fed. 74). After qualified disclaimers the Circuit Court of Appeals for the Third Circuit held the patent as qualified by the disclaimers valid (284 Fed. 746). The Supreme Court held the patent to be invalid.

Corona Co. v. Dovan Co., 276 U. S. 358. The patent was first held invalid by the Circuit Court of Appeals for the Second Circuit. Dovan Chemical Co. v. National Aniline & Chemical Co., 292 Fed. 555. The patent was then held

A. G. TRIPLETT, R. M. TRIPLETT, A. NELSON, C. M. TRIPLETT, JR., and The Baltimore Gaslight Company, Appellees and Cross-Appellants

Cross-Appeals from the District Court of the United States for the District of Maryland

This cause came on to be heard on the transcript of the

---

valid by the Circuit Court of Appeals for the Third Circuit (10 Fed. [2d] 298). The Supreme Court held the patent to be invalid.

Saranac Machine Co. v. Wirebounds Co., 282 U. S. 704. The patent was held invalid by the Circuit Court of Appeals for the Seventh Circuit in Wirebounds Patents Co. v. Gibbons Box Co., 25 Fed. (2d) 363. Subsequently the Circuit Court of Appeals for the Sixth Circuit held the patent valid and infringed. (37 Fed. [2d] 830). The Supreme Court held the patent invalid.

Radio Corp. v. Radio Laboratories, 293 U. S. 1. After the Supreme Court had held DeForest to be the prior inventor the Circuit Court of Appeals for the Second Circuit held Armstrong to be the inventor. 66 Fed. (2d) 768. The Supreme Court upheld DeForest.

Cases in Circuit Courts of Appeals where the patent was first held to be invalid by one Circuit Court of Appeals and later held to be valid by another Circuit Court of Appeals (omitting cases which reached the Supreme Court):

Maitland v. Goetz, 86 Fed. 124 (Second Circuit). Stiringer patent held invalid by Circuit Court of Appeals for the Third Circuit (Maitland v. Gibson, 63 Fed. 840). Patent then surrendered and reissued by narrowing claim 1. The reissued claim 1 held valid by Circuit Court of Appeals for the Second Circuit.

McNeely v. Williames, 96 Fed. 978 (third Circuit). Certain claims were held invalid in 1890 by the Circuit Court of Appeals for the Second Circuit (Williames v. Barnard, 41 Fed. 358), the opinion stating that on filing a disclaimer of the claims held invalid complainants were entitled to a decree upon the other claims. Apparently no appeal was taken by the defendant and at that time plaintiff had no right of appeal from the dismissal. For some reason not apparent on the record a decree was, according to the opin-

record from the District Court of the United States for the District of Maryland, and was argued by counsel.

On consideration whereof, it is now here ordered, adjudged, and decreed by this Court that the decree of the said District Court in this cause be, and the same is hereby, reversed; that this cause be, and the same is hereby, remanded to the District Court of the United States for the

---

ion of the Court in the Third Circuit (p. 980), entered on June 11, 1892, without any disclaimer having been filed.

Suit was brought in the Third Circuit on January 27, 1893. Defendant asserted (p. 980) that "the patent in suit is wholly void by reason of unreasonable neglect or delay" to enter a disclaimer. The Circuit Court of Appeals for the Third Circuit held (p. 986):

"We must, therefore, hold that the Reid and Billington apparatus did not anticipate any of the claims of the patent in suit, and consequently that Williames was under no obligation to enter a disclaimer."

and held the patent valid.

Westinghouse Company v. Stanley Co., 133 Fed. 167 (First Circuit). The patent was held invalid by the Circuit Court of Appeals for the Second Circuit (Westinghouse Co. v. Catskill Co., 121 Fed. 831), holding plaintiff's attempted antedating proofs to be insufficient. The Circuit Court of Appeals for the First Circuit upon more complete proofs held the patent valid. So did the Circuit Court of Appeals for the Seventh Circuit in Diamond Meter Co. v. Westinghouse, 152 Fed. 704.

Thomson-Houston Co. v. Black River Traction Co., 135 Fed. 759 (Second Circuit). In this case the patent had been held invalid by the Circuit Court of Appeals for the Second Circuit in Thomson-Houston Elec. Co. Union Ry. Co., 86 Fed. 636, and also by the Circuit Court of Appeals for the Sixth Circuit in Thomson-Houston Elec. Co. v. Jeffrey Mfg. Co., 101 Fed. 121. Subsequently the patent was reissued. In the previous litigation (86 Fed. 636) plaintiff urged that the claim contains certain features by implication and therefore was not anticipated. The reissue specification contained a disclaimer limiting the claim to the features in question. It was held that the reissued claim was not for different inventions, and that the claim was valid.

District of Maryland, at Baltimore, for further proceedings in accordance with the opinion of the Court filed herein; and that the costs be paid by the appellants and cross-appellees.

Morris A. Soper, U. S. Circuit Judge.

June 4, 1935.

Imperial Bottle Cap & Machine Co. v. Crown Cork & Seal Co., 139 Fed. 312 (Fourth Circuit). Pending consideration of the case by this Court, the Circuit Court of Appeals for the Second Circuit held the patent invalid (Crown Cork & Seal Co. v. Standard Stopper Co., 136 Fed. 841). This Court, recognizing the doctrine of comity, nevertheless held the patent to be valid.

Peiper v. S. S. White Dental Co., 228 Fed. 30 (1915). Patent held valid and infringed by the Circuit Court of Appeals for the Seventh Circuit. Previously in 1908 the patent had been held invalid by the Circuit Court of Appeals for the Seventh Circuit. Peiper v. Electro Dental Mfg. Co., 160 Fed. 930.

In Backstay Machine & Leather Co. v. Hamilton, 262 Fed. 411 (1920), certain claims were held invalid. In a subsequent suit, Backstay Machine & Leather Co. v. Zenite Metal Co., 293 Fed. 23, the Circuit Court of Appeals for the Seventh Circuit held the same claims to be valid and infringed.

In Wenborne-Karpen Dryer Co. v. Cutler Dry Kiln Co., 290 Fed. 625 (1923), the Circuit Court of Appeals for the Second Circuit held the patent void for lack of invention. After the decision in the Second Circuit the defendant, in a pending suit in the Sixth Circuit, moved to dismiss upon the ground of privity between the parties. The Circuit Court of Appeals in the Sixth Circuit overruled the plea of privity, reversed a decree of the lower Court dismissing the bill, and remanded the case for hearing on the merits. Wenborne-Karpen Dryer Co. v. Dort Motor Car Co., 14 Fed. (2d) 378.

In Franc. Strohmeyer v. Arthur Siegman, 27 Fed. (2d) 785, the patent was held valid after it had been held invalid by the Circuit Court of Appeals for the Sixth Circuit, Forchheimer v. Franc, Strohmeyer, 20 Fed. (2d) 553.

On another day, to-wit, July 5, 1935, the mandate of this Court in this cause is issued and transmitted to the United States District Court at Baltimore, Maryland, in due form.

Same day, the original petition for appeal, order allowing appeal, petition for cross-appeal, order allowing cross-appeal, original exhibits and original stipulation waiving bonds are returned to the Clerk of the United States District Court at Baltimore, Maryland.

CLERK'S CERTIFICATE

UNITED STATES OF AMERICA,
Fourth Circuit, ss:

I, Claude M. Dean, Clerk of the United States Circuit Court of Appeals for the Fourth Circuit, do certify that the foregoing, together with 603 pages of Exhibits bound together in a separate binding entitled "Book of Exhibits", being Volume Two, and certified accordingly, is a true copy of the entire record and proceedings in the therein entitled cause, as the same remain upon the records and files of the said Circuit Court of Appeals.

In testimony whereof I hereto set my hand and affix the seal of the said United States Circuit Court of Appeals for the Fourth Circuit, at Richmond, Virginia, this 12th day of July, A. D. 1935.

Claude M. Dean, Clerk, U. S. Circuit Court of Appeals, Fourth Circuit. (Seal United States Circuit Court of Appeals, Fourth Circuit.

SUPREME COURT OF THE UNITED STATES

ORDER ALLOWING CERTIORARI—Filed December 9, 1935

The petition herein for a writ of certiorari to the United States Circuit Court of Appeals for the Fourth Circuit is granted. And it is further ordered that the duly certified copy of the transcript of the proceedings below which accompanied the petition shall be treated as though filed in response to such writ.

FILE COPY

FILED
AUG 21 1935
CHARLES ELMORE CROPLEY
CLERK

Supreme Court of the United States,

OCTOBER TERM, 1935.

No. 388

A. G. TRIPLETT, R. M. TRIPLETT, A. NELSON, C. M. TRIPLETT, JR., and THE BALTIMORE GAS-LIGHT COMPANY,

Petitioners,

vs.

PERCIVAL D. LOWELL, FRANCIS W. DUNMORE, and DUBILIER CONDENSER CORPORATION,

Respondents.

PETITION FOR WRIT OF CERTIORARI TO THE CIRCUIT COURT OF APPEALS FOR THE FOURTH CIRCUIT AND BRIEF IN SUPPORT THEREOF.

SAMUEL E. DARBY, JR.,
Counsel for Petitioners.

COOK & MARKELL,
Attorneys for Petitioners.

INDEX.

PAGE

PETITION FOR CERTIORARI 1

Summary and Short Statement of the Subject Matter 1
The Questions Presented 4
Reasons Relied on for Allowance of the Writ..... 5

BRIEF IN SUPPORT OF PETITION

Opinions of the Courts Below 8
Jurisdiction 8
Statement 8
Specification of Errors 8
Summary of Argument 9
Argument 10

Point 1—The Decision is in Direct Conflict with the Decision of this Court in *Ensten* vs. *Ascher*, 282 U. S. 455..... 10

Point 2—The Decision is in Direct Conflict with the Decision of this Court in *Altoona Publix Theatres* vs. *American Tri-Ergon*, 294 U. S. 477 13

Point 3—The Rule Established by the Decision in the Fourth Circuit is in Direct Conflict with the Rule in the Second Circuit..... 15

Point 4—The Decision is in Direct Conflict with the Provisions of Section 4922 R. S..... 17

Point 5—The Case Involves Important Questions of Law Involving the Disclaimer Statutes Not Heretofore Passed Upon by this Court... 18

PAGE

CONCLUSION 19

APPENDIX A

Disclaimer as to Patent No. 1,635,117 20
Disclaimer as to Patent No. 1,455,141 21

APPENDIX B

Section 4917 R. S. 26
Section 4922 R. S. 26

Index of Cases.

Altoona Publix Theatres vs. American Tri-Ergon, 294 U. S. 477 ..... 2, 6, 8, 12, 13, 14
Better Packages Inc. vs. Nashua Package Sealing Co. et al., 6 Fed. Supp. 673; 74 Fed. (2) 682; 55 S. Ct. 830 .. 6, 16
Carbice Corp. of America vs. American Patents Development Co. et al., 283 U. S. 27 8
DeForest Radio Co. vs. General Electric Co., 283 U. S. 664 8
Ensten vs. Simon Ascher & Co., 282 U. S. 455 ..... 3, 5, 10
Hailes vs. Albany Stove Co., 123 U. S. 582 10
Hoe & Co. vs. Goss Printing Press Co., 31 Fed. (2) 565 .. 6, 15
Lowell et al. vs. Radio Corporation of America, 50 Fed. (2) 305, 309; 287 U. S. 648, 650 2
Lowell et al. vs. Triplett et al., 77 Fed. (2) 556 ..... 3, 4, 8
Radio Condenser Co. vs. General Instrument Corp., 65 Fed. (2) 458 ..... 6, 16
Simmons vs. Greer Bros., 258 U. S. 82 8
Standard Wholesale Phosphate & Acid Works Inc. vs. The General Chemical Co., 77 Fed. (2) 230 16

Supreme Court of the United States.

OCTOBER TERM, 1935.

A. G. TRIPLETT, R. M. TRIPLETT, A. NELSON, C. M. TRIPLETT, JR., and THE BALTIMORE GASLIGHT COMPANY,
Petitioners,

vs.

PERCIVAL D. LOWELL, FRANCIS W. DUNMORE, and DUBILIER CONDENSER CORPORATION,
Respondents.

PETITION FOR A WRIT OF CERTIORARI TO THE CIRCUIT COURT OF APPEALS FOR THE FOURTH CIRCUIT.

TO THE HONORABLE, THE CHIEF JUSTICE AND ASSOCIATE JUSTICES OF THE SUPREME COURT OF THE UNITED STATES:

Your petitioners respectfully pray for a writ of certiorari to the Circuit Court of Appeals for the Fourth Circuit, to review a judgment of that Court rendered June 3, 1935. A transcript of the record in the case, including the proceedings in said Circuit Court of Appeals, is furnished herewith in accordance with Rule 38 of the rules of this Court.

Summary and Short Statement of the Matter Involved.

This suit was instituted in the District Court of Maryland for alleged infringement of patents, including Dunmore patent No. 1,635,117 and Lowell and Dunmore patent No. 1,455,141.

These two patents were previously in litigation in a suit brought in the District of Delaware by the same plaintiffs against Radio Corporation of America. In the Delaware case the Court of Appeals for the Third Circuit, speaking through Judge Woolley, found claim 9 of patent No. 1,635,117 and claims 3 and 14 of patent No. 1,455,141 to be invalid on the grounds (1) that the claims covered mere unpatentable aggregations, and (2) that the claims defined no patentable invention over what was well known and in use in the prior art (50 Fed. (2) 305; 309). Petitions for rehearing were denied on July 6, 1932, and this Court denied writs of certiorari on October 25, 1932 (287 U. S. 648, 650).

On July 8, 1933—*eight months and thirteen days after the denial of certiorari*—plaintiffs filed disclaimers in the Patent Office with respect to certain claims of each of the patents, including the claims which had been held to be invalid (See Appendix A, pp. 20, 21). The disclaimers, however, did not purport to disclaim the invalid claims. On the contrary, the admitted intent and effect of the disclaimer was to import into the claims a limitation not theretofore included therein. In other words, the disclaimer filed with respect to both of the patents was of the type and character and in the form condemned by this Court in *Altoona Publix Theatres* vs. *American Tri-Ergon*, 294 U. S. 477.

Indeed, plaintiffs contended in the Courts below, and the Court of Appeals accepted the contention, that the claims should be treated as though no disclaimers had been filed. Thus, plaintiffs stated in their brief in the Court below—

> "No disclaimer was really required; it was filed purely as a matter of precaution to insure that the patent would be construed according to settled law. If it was filed too late or if it is otherwise objectionable the disclaimer is invalid and the patentee then is entitled to rest on his specification and claims as they stood in his original patent construed according to settled law."
>
> * * * * * * *
>
> "The disclaimers do no more than invoke and insure the rule of construction of their claims laid down by

> Westinghouse vs. Boyden supra; they do not cancel anything; in the language of the Court below (Vol. 1, p. 263) 'they seem to me not to disclaim at all'."

The Court of Appeals based its decision below on the assumption to that effect. It said (Vol. 1, p. 424; 77 Fed. (2) 556, 559),

> "We may assume, for the purposes of the pending case, that in effect no disclaimer has been filed as to the claims passed on in the Third Circuit * * *".

On August 17, 1933—*over nine months after the denial of certiorari*—plaintiffs filed the present suit charging infringement of the claims of the two patents that had previously been held to be invalid by the Court of Appeals for the Third Circuit, as well as of other claims in both patents which were not involved in that suit.

When the case was called to trial before the District Court, defendants presented a motion to dismiss the bill of complaint as to the first two patents on the authority of *Ensten* vs. *Simon Ascher & Co.*, 282 U. S. 455, on the ground that plaintiffs' delay of eight months and thirteen days in filing disclaimers with respect to the invalidated claims of the patents was "unreasonable" neglect or delay, and in consequence, the patents were wholly invalid. The District Court denied this motion.

Thereupon, defendants presented a motion to dismiss the bill of complaint as to the first two patents on the ground that no adequate disclaimer had been filed because of the admitted fact that the disclaimers did not purport to, or in fact, disclaim anything, but merely imported into the claims limitations not theretofore included in the claims. Indeed, the only way that the decision of the Court of Appeals for the Third Circuit (that the claims were invalid because of aggregation and want of invention) could have been properly met by plaintiffs would have been by an actual and complete disclaimer of the invalidated claims.

Though admitting that no disclaimer had been filed or was intended to have been filed to meet the invalidating decision

of the Third Circuit Court of Appeals, plaintiffs opposed this motion on the ground that there was nothing to compel them to file disclaimers and thereby avail themselves of the disclaimer statute; that the decision of the Circuit Court of Appeals for the Third Circuit invalidating some of the claims of the two patents was effective only in the Third Circuit, except as against the defendant in that case; and that plaintiffs by *not* disclaiming the invalid claims could sue on those claims and other claims of the patent at any time during its life in any Circuit other than the Third Circuit.

The District Court granted the second motion and dismissed the bill as to the two patents (Vol. I, p. 263).

The Court of Appeals for the Fourth Circuit reversed the District Court, sustained plaintiffs' contentions, and remanded the case to the District Court for a trial on the merits (77 Fed. (2) 556).

The patents relate to wireless signalling systems, and if this petition for a writ of certiorari is not granted, a lengthy trial, involving highly technical subject matter, covering the same ground previously covered by the District Court of Delaware and the Court of Appeals for the Third Circuit, will be necessitated.

The litigation also involved a third patent, the subject matter and disposition of which is not involved in the present petition.

The Questions Presented.

The questions presented for determination by this Court, in the event the present petition is granted, are:

1. Can a patentee sue, or maintain a suit in one Judicial Circuit on the claims of his patent that have previously been finally decreed to be invaid by a Court of competent jurisdiction and of last resort in another Judicial Circuit?

2. *Must* a patentee disclaim, within a reasonable time, the claims that have been held to be invalid by a Court of last

resort in one Circuit in order to thereafter sue, or maintain a suit for infringement of other claims of the patent in another Circuit. Stated another way; is it *compulsory* on or merely *optional* with a patentee to disclaim the claims which have been invalidated by a Court of last resort in one Circuit, before he can sue or maintain a suit for infringement of the patent in another Circuit?

3. Can a patentee, who has filed an inadequate and invalid disclaimer after a Court of last resort in one Circuit has declared one or more claims of the patent to be invalid, thereafter institute and/or maintain a suit on the patent in another circuit and treat the invalidated claims as though no disclaimer had been filed with respect thereto, on the theory that the patentee disagreed with the prior decree of invalidation, and was entitled to a determination *de novo* by the Court of another Circuit on the issue of the validity of the claims which had previously been finally adjudged to be invaid.

Reasons Relied on for Allowance of the Writ.

The discretionary power of this Court is invoked upon the following grounds:

1. Because the decision of the Court of Appeals for the Fourth Circuit in this case holding, in effect, that there was no compulsion upon the patentee to disclaim the claims previously adjudged to be invalid by the Court of Appeals for the Third Circuit, as a condition precedent to the commencement (more than nine months subsequent thereto) or maintenance of the present suit, is directly opposed to and in direct conflict with the decision of this Court in *Ensten* vs. *Simon Ascher & Co.*, 282 U. S. 455.

2. Because the decision of the Court of Appeals for the Fourth Circuit in this case, holding in effect that the in-

adequate and invalid disclaimer filed by the patentee more than eight months after the previous adjudication of invalidity by the Court of Appeals of another Circuit, can be ignored, and a trial on the merits had as though no disclaimer in fact had been filed, is directly opposed to and in direct conflict with the decision of this Court in *Altoona Publix Theatres* vs. *American Tri-Ergon*, 294 U. S. 477.

3. Because the rule established by the decision of the Court of Appeals for the Fourth Circuit in this case in construing the disclaimer sections of the statute (Sections 4917 and 4922 R. S.) as to the necessity for filing disclaimers, and the time within which they must be filed, is in direct conflict with the rule established by the Court of Appeals for the Second Circuit in *Hoe & Co.* vs. *Goss Printing Press Co.*, 31 Fed. (2) 565; *Better Packages Inc.* vs. *Nashua Package Sealing Co. et al.*, 6 Fed. Supp. 673, affirmed 74 Fed. (2) 682, certiorari denied, 55 S. Ct. 830; *Radio Condenser Co.* vs. *General Instrument Corp.*, 65 Fed. (2) 458.

4. Because the decision of the Circuit Court of Appeals for the Fourth Circuit in this case, to the effect that the present suit was properly brought or can be maintained, notwithstanding the prior adjudication of invalidity of some of the claims of the patents, and the failure to file a disclaimer of the invalid subject matter, is directly opposed to the express provisions of Section 4922 R. S.

5. Because the case involves important questions of patent law arising under the patent statutes which should be settled by this Court.

WHEREFORE your petitioners respectfully pray that a writ of certiorari be issued under the seal of this Court directed to the United States Circuit Court of Appeals for the Fourth Circuit, commanding the said Court to certify and send to

this Court on a day to be designated, a full and complete transcript of the record and all proceedings in the Circuit Court of Appeals had in this cause, to the end that this cause may be reviewed and determined by this Court; that the judgment of the Circuit Court of Appeals be reversed, and that petitioners be granted such other and further relief as may seem proper.

SAMUEL E. DARBY, JR.,
Counsel for Petitioners.

COOK & MARKELL,
Attorneys for Petitioners.

Dated: New York, N. Y., August 20, 1935.

BRIEF FOR PETITIONERS IN SUPPORT OF PETITION FOR WRIT OF CERTIORARI.

Opinions of the Courts Below.

The opinion of the District Court is reproduced in Vol. 1, p. 263. The opinion of the Court of Appeals is reported in 77 Fed. (2) 556 (Vol. 1, p. 417).

Jurisdiction.

The date of the judgment is June 3, 1935 (Vol. 1, p. 417). The statute under which jurisdiction is invoked is Section 240(a) of the Judicial Code (28 U. S. C. 347, as amended). Cases believed to sustain the jurisdiction are *DeForest Radio Co.* vs. *General Electric Co.*, 283 U. S. 664; *Carbice Corp. of America* vs. *American Patents Development Co., et al.*, 283 U. S. 27; *Simmons* vs. *Grier Bros.*, 258 U. S. 82; *Altoona Publix Theatres* vs. *American Tri-Ergon Corp.*, 294 U. S. 477.

Statement.

The facts, so far as this application is concerned, are sufficiently stated in the petition.

Specification of Errors.

The errors which petitioners will urge, if the writ of certiorari is granted, are that the Circuit Court of Appeals for the Fourth Circuit erred—

(1) In reversing the decree of the District Court and reinstating the bill of complaint as to the first two patents in suit.

(2) In failing to hold that the two patents are invalid because of the invalid disclaimer filed with respect to each thereof.

(3) In failing to hold the two patents invalid for failure to file an adequate disclaimer of the invalidated claims within a reasonable time after the invalidation thereof, and/or prior to the filing of the bill of complaint, which was more than nine months subsequent to the finality of invalidation.

(4) In failing to affirm the decree of the District Court dismissing the bill of complaint as to the first two patents in suit.

Summary of Argument.

The points of the argument follow the reasons relied upon for the petition for the writ, and, for the sake of brevity, are not repeated at this point.

ARGUMENT.

1. The decision of the Court of Appeals for the Fourth Circuit in this case, in holding, in effect, that there was no compulsion upon the patentee to disclaim the previously invalidated claims as a condition precedent to the commencement (more than nine months subsequent thereto) or maintenance of the present suit, is directly opposed to and in direct conflict with the decision of this Court in *Ensten* vs. *Simon Ascher & Co.*, 282 U. S. 455.

In *Ensten* vs. *Simon Ascher & Co., supra,* this Court reviewed the history of Sections 4917 and 4922 of the Revised Statutes and pointed out, quoting from *Hailes* vs. *Albany Stove Co.,* 123 U. S. 582, that before their enactment a patent was wholly void if any part of the invention was wrongfully claimed by the patentee. The Court further pointed out that the statute is remedial, and that escape from complete invalidation of the patent due to subject matter invalidly included therein "is permitted only to one who acted originally in good faith and who has complied with the prescribed conditions" of the statute.

The statute (see Appendix B, pp. 26-27) denies escape to the patentee who has "unreasonably neglected or delayed to enter a disclaimer". In the *Ensten* case this Court said (quoting from Robinson on Patents):

> "Delay begins whenever the patentee becomes aware that he has claimed more than he has invented or described.",

On the question of *when* the patentee becomes aware that he has claimed more than he invented, this Court said:

> "When a competent court has declared his pretensions without sufficient foundation, we think good faith and the spirit of the enactment demand that he act with such promptness as the circumstances permit either to vindicate his position or to relieve the public from further evil effects of his false assertion."

With the foregoing brief consideration of the decision of this Court in the *Ensten* case it at once becomes apparent that the decision of the Court of Appeals for the Fourth Circuit in the case at bar is directly opposed thereto and in direct conflict therewith. In the present case the Court of Appeals for the Third Circuit invalidated claim 9 of one patent and claims 3 and 14 of the other patent (59 Fed. (2) 305, 309). This Court denied writs of certiorari on October 25, 1932. The bill of complaint in the present case was not filed until more than nine months thereafter.

Plaintiffs' contention (which was adopted by the Court of Appeals) is the bald one that because the unreasonably delayed disclaimer in fact disclaimed nothing, it should be ignored, and the claims treated as though no disclaimer had been filed; and *that no patentee is compelled to take advantage of the disclaimer statute;* and that a patentee, with claims finally adjudged to be invalid by a Court of competent jurisdiction, may, if he desires to do so, elect not to avail himself of the benefits of the disclaimer statute, and thereby be in the position to sue anyone, other than the defendant in the previous litigation, in any other Circuit at any time throughout the life of the patent. In other words, plaintiffs' contention is that a patentee who does not file an effective disclaimer of previously invalidated claims, may at any time, during the life of the patent, secure an adjudication, *de novo* on the validity of the claims of his patent in another jurisdiction.

This contention, which was accepted by the Court of Appeals for the Fourth Circuit and becomes the law in that Circuit by the decision in the present case, is, we submit, wholly opposed to the intent and purpose of Sections 4917

and 4922 R. S., and to the decision of this Court in the *Ensten* case.

In the later case of *Altoona Publix Theatres* vs. *American Tri-Ergon Corp.*, 294 U. S. 477, this Court noted at page 491 (citing numerous authority to that effect) that the settled rule is that unreasonable delay in making a disclaimer invalidates the whole patent. In the present case there is no question as to the delay being *unreasonably* long because the patentees say, in effect, that not only have they failed to file an effective disclaimer to meet the invalidation of their claims by the Court of Appeals for the Third Circuit, but that they have no intention of ever doing so. On the contrary, they assert a right to try out the question of validity of their claims in every judicial circuit of the Union when and as they please.

A patent monopoly, as this Court has often said, is a creature of stature. It is in derogation of the public interest, and each time that it is sought to enforce the monopoly the validity thereof must be carefully scrutinized. Thus, a patentee, seeking to enforce the monopoly established by his grant, subjects his grant to the test of an adjudication of the validity thereof. Each time that it is endeavored to enforce the monopoly thereafter, subject only to the principles of *res adjudicata*, comity, and *stare decisis*, public interest demands that the validity be again carefully scrutinized. On the other hand, if on the initial attempt to enforce the monopoly it is finally found to be invalid by a Court of competent jurisdiction, there is no rule or reason which should or does permit the invalid monopoly to be attempted to be enforced, in whole or in part, in any other jurisdiction.

The Court of Appeals in the present case, as justification for its decision, cites several cases in which, after the invalidation of one or more claims in one Circuit, the same claims have been adjudged valid in another Circuit. It should be noted, however, that in all such instances the decisions were rendered long prior to the decision of this Court in the *Ensten* case, and that in none of them was the dis-

claimed statute or its effect called to the attention of the Court or considered by it.

The result of the decision of the Court of Appeals for the Fourth Circuit, unless corrected by this Court in a review of the present case, is that, although one or more claims of a patent are held to be invalid by a Court of last resort in one Circuit, the patentee may, at any time during the life of the patent, if he has not filed a disclaimer of the invalid claims, sue other infringers on the same and/or other claims of the patent (if there be any) in any other Circuit of the Federal Judicial System.

This result is in such sharp conflict with the decision of this Court in the *Ensten* case that the present petition should be granted and the decision of the Court of Appeals for the Fourth Circuit overruled.

2. The decision of the Court of Appeals for the Fourth Circuit in this case holding, in effect, that the inadequate and invalid disclaimer filed by the patentee more than eight months after the previous adjudication of invalidity by the Court of Appeals of another Circuit, can be ignored and a trial on the merits had as though no disclaimer had been filed, is directly opposed to and in direct conflict with the decision of this Court in *Altoona Publix Theatres* vs. *American Tri-Ergon*, 294 U. S. 477.

The disclaimer, which was filed by plaintiffs with respect to both of the patents in suit eight months and thirteen days after denial of writs of certiorari, admittedly "disclaimed nothing". The Court of Appeals said in its opinion (Vol. 1, p. 424):

> "We may assume, for the purposes of the pending case, that in effect no disclaimer has been filed as to the claims passed on in the Third Circuit, for even if the delay of 8 months is satisfactorily accounted for,

> the plaintiff admits, as the defendants contend and the District Judge held, that the so-called disclaimers disclaimed nothing and amounted only to an admission that the broad language of the claims should be limited to the disclosures of the specifications, in accordance with the well established rule."

Thus, the patentee in the present case has filed an invalid disclaimer, which automatically and irrevocably invalidates the original claims, as this Court expressly held in *Altoona Publix Theatres* vs. *American Tri-Ergon Corp.*, 294 U. S. 477. This Court said (at p. 491):

> "With the invalid disclaimer must fall the original claims as they stood before the disclaimer. The disclaimer is a representation, as open as the patent itself, on which the public is entitled to rely, that the original claim is one which the patentee does not, in the language of the statute 'choose to claim or hold by virtue of the patent'. Upon the filing of the disclaimers, the original claims were withdrawn from the protection of the patent laws and the public was entitled to manufacture and use the device originally claimed as freely as though it had been abandoned. To permit the abandoned claim to be revived, with the presumption of validity because the patentee had made an improper use of the disclaimer, would be an inadmissible abuse of the patent law to the detriment of the public."

It will be noted that in the present case claims 9, 11 and 12 of patent No. 1,635,117 are involved, and that the invalid disclaimer was filed with respect to each thereof. Similarly, claims 1 to 4, 13 and 14 of patent No. 1,455,141 are involved in the suit, and the invalid disclaimer was filed with respect to each thereof.

It thus appears that the decision of the Court of Appeals for the Fourth Circuit in the present case, which treats the claims in their original form as though no disclaimer had been filed with respect thereto, is directly opposed to and in direct conflict with the decision of this Court in the *Altoona Publix Theatres* vs. *American Tri-Ergon Corp.* case, *supra*, and should be reversed by this Court.

3. The rule established by the decision of the Court of Appeals for the Fourth Circuit in this case in construing the disclaimer sections of the statute (Sections 4917 and 4922 R. S.) as to the necessity for filing disclaimers and the time within which they must be filed, is in direct conflict with the rule established by the Court of Appeals for the Second Circuit.

The Courts in the Second Circuit have passed squarely upon the identical issue presented in the present case, and have reached a conclusion diametrically opposed thereto. In *Hoe* vs. *Goss Printing Press Co.*, 31 Fed. (2) 565, the Second Circuit Court of Appeals, rejecting the identical contentions made by the plaintiffs in the court below, and established as the law in the Fourth Circuit by the decision of the Court of Appeals in the present case, said, in a *per curiam* opinion,

> "The plaintiff at bar goes further, however, arguing that, even after denial of an application for certiorari, the patentee should not be obliged to disclaim. It argues that the Circuit Court of Appeals of another circuit might disagree with our ruling, and the Supreme Court would then take the case on certiorari and might declare the claims valid. A disclaimer would merely destroy this right, though the defendant is protected forever by its decree, and really has no interest in the disclaimer at all. While we acknowledge the difficulty and the possibility, it appears to us that so to extend the patentee's time might result in avoiding the statute altogether. The patentee may not sue again, or, if he does, the result may be the same. It does not follow, because two Circuit Courts of Appeals have held the same way, that a third will not disagree. Must the patentee disclaim at the conclusion of the second suit, or may he wait until all nine circuits have passed upon his claims? The question is at best of seasonable action, and in practice there must be some end, short of exhausing all conceivable remedies. When the patent has once passed

> through all the courts then available, the statute should have its effect; else the putatively invalid claims may remain as scarecrows, preserved against the bare possibility that at some future time they may come to life."

See also, *Better Packages Inc.* vs. *Nashua Package Sealing Co., Inc., et al,* 6 Fed. Supp. 573 S. D. N. Y., affirmed 74 Fed. (2) 682, certiorari denied 55 S. C. 830; *Radio Condenser Co.* vs. *General Instrument Corp.,* 65 Fed. (2) 458.

Moreover, the patentees delayed for more than eight months after finality of invalidation in filing the invalid disclaimer. This delay alone invalidates the patents in their entirety under the decision of this Court in the *Ensten* case, and the "30 day rule" established in the Second Circuit in the cases above cited.

The precise question—what period of time constitutes undue delay—is involved in the petition for a writ of certiorari, which, it is understood, has been or will be filed in behalf of the defendant in *Standard Wholesale Phosphate and Acid Works Inc.* vs. *The General Chemical Company,* seeking a review of the decision of the same Court of Appeals for the Fourth Circuit. In that case (77 Fed. (2) 230) the Court of Appeals reversed the District Court of Maryland which had dismissed the bill of complaint because of a delay in excess of thirty days (adopting the Second Circuit rule), and excused a delay materially in excess thereof.

Thus it is evident that there is direct, complete and irreconcilable conflict between the Second and Fourth Circuit Courts of Appeals which should be settled by this Court in a review of the present case.

4. The decision of the Circuit Court of Appeals for the Fourth Circuit in this case to the effect that the present suit was properly brought or can be maintained notwithstanding the prior adjudication of invalidity of some of the claims of the patents, and the failure to file a disclaimer of their invalid subject matter, is directly opposed to the express provisions of Section 4922 R. S.

Treating the claims, as did the Court of Appeals for the Fourth Circuit in the present case, as though no disclaimer has been filed as to the claims previously invalidated by the Court of Appeals for the Third Circuit, then it is apparent, from the express wording of the statute, that, in the absence of such a disclaimer, filed without "unreasonable neglect or delay" after the invalidation, the present suit could not be maintained.

Section 4922 R. S. (35 U. S. C. 71) expressly provides that

> "Whenever, * * * a patentee has * * * claimed to be the original and first inventor or discoverer of any material or substantial part of the thing patented, of which he was not the original and first inventor or discoverer, every such patentee * * * *may maintain* a suit at law or in equity, for the infringement of *any part thereof which was bona fide his own* * * * notwithstanding the specification may embrace more than that of which the patentee was the first inventor or discoverer. * * * *But no patentee shall be entitled to the benefits of this section if he has unreasonably neglected or delayed to enter a disclaimer.*" (Italics ours.)

From this it will be seen that the statute expressly provides that a suit for infringement may be maintained on a patent with invalidated claims therein—

(1) *only* on claims which have *not* been invalidated; and

(2) *only* if the patentee has *not* "unreasonably neglected or delayed to enter a disclaimer."

Obviously, if a suit may not be *maintained* except on those conditions, no suit can be properly *instituted* except on those conditions. In the present case, however, *neither* of those conditions are met. Plaintiffs have sued, and the Court of Appeals has decided they have the right to maintain a suit, not only on claims of the patent not previously adjudicated, but on the previously invalidated claims as well. Likewise, with respect to the second of the above conditions, not only has the patentee in the present case completely neglected and delayed to file disclaimers of the invalid subject matter of the two patents in suit, but has avowed an intention not to do so, and repudiates any obligation on his part to file such disclaimers as a condition precedent to maintaining a suit for infringement in a jurisdiction other than that in which the invalidation was decreed.

It follows, therefore, that the decision of the Court of Appeals for the Fourth Circuit is directly contrary to the statute, and establishes a rule for that Circuit, and a precedent in patent cases, in such direct conflict with the statute as to require review of the present case by this Court and the reversal thereof.

5. This case involves important questions of law arising under the patent statutes which should be settled by this Court.

While, as hereinbefore pointed out, the decisions of this Court in *Ensten* vs. *Simon Ascher, supra,* and *Altoona Publix Theatres* vs. *American Tri-Ergon, supra* and the language of Section 4922 R. S. clearly indicate that the decision of the Court of Appeals for the Fourth Circuit in the present case

is erroneous, apparently this Court has never passed squarely on the question of whether or not a disclaimer of invalid subject matter is *compulsory* upon a patentee, subsequent to a final decree by a Court of competent jurisdiction, as a condition precedent to the commencement or maintenance of a suit on other claims of that patent in a jurisdiction other than that in which the invalidating decree was obtained; or on the question of whether or not a patentee may ever sue or maintain a suit in another jurisdiction on claims which have been finally adjudicated to be invalid by a Court of competent jurisdiction. The Courts of Appeals for the Second and Fourth Circuits have answered both of these questions in a diametrically opposite manner.

It is highly important that these questions be determinatively settled by the opinion of this Court so that the rule may be definitely and correctly established in all of the Circuits.

Plaintiff's disingenuous argument, and the decision of the Court of Appeals for the Fourth Circuit in the present case, in practical effect set aside and nullify the provisions of the statute and the recent decisions of this Court with reference thereto.

The questions presented by this case, therefore, should be determined by this Court.

CONCLUSION.

It is earnestly urged that the petition be granted.

Respectfully submitted,

SAMUEL E. DARBY, JR.,
Counsel for Petitioners.

COOK & MARKELL,
Attorneys for Petitioners.

Dated: New York, N. Y.
August 20, 1935.

APPENDIX A.

Disclaimer.

1,635,117.—*Francis W. Dunmore,* Washington, D. C. SIGNAL-RECEIVING SYSTEM. Patent dated July 5, 1927. Disclaimer filed July 8, 1933, by the patentee and the exclusive licensee, *Dubilier Condenser Corporation.*

Hereby enter their disclaimer to:

(1) Any "source of alternating current power supply" in claim 1 except such as delivers rectified alternating current to said grid electrodes and raw alternating current to said filament electrodes; to any "means associated with said alternating current power supply for impressing a negative potential on said grid electrodes" in said claim 1, except such means as comprise a resistance in series with said grid electrodes shunted by a condenser; to any "means for energizing said filaments" as specified in claims 2, 3, 4, 5, and 6, except such means as supply raw alternating current to said filaments; and to any "rectifier adapted to supply a negative potential to said grid electrodes" as specified in claims 2, 4, 5, and 6 except such as supply such negative grid biasing potential by means of a bias determining resistance in series with the grid electrodes and connected to the respective cathodes of the amplifying tubes and shunted by a condenser of low impedance to power supply frequencies.

(2) Any "filament electrodes" specified in claim 9 except such as are energized by raw alternating current; and any "means for supplying a negative potential to the grid electrode of said electron tube from said source of alternating current" as specified in claim 9 except such means as comprise a bias determining resistance connected in a series path between the grid and filament electrodes and shunted by a condenser of low impedance to power supply frequencies.

(3) Any "source of power adapted to be energized by alternating current or the like" as specified in claim 11, except such as supplies raw alternating current to the cathode heating circuits of such tubes and rectified current to the grid circuits of such tubes; and to any "output terminals connected at opposite terminals of said resistance" as specified in said claim, except such as are also connected to the grid and cathode of the vacuum tube.

(4) Any "method of energizing thermionic vacuum tubes or the like from a source of alternating current" as specified in claim 12, except such as supplies raw alternating current to the cathode heating circuit of such tubes and rectified current to the grid circuit of such tubes; and to "impressing the desired portion of such voltage drop upon said thermionic tube" except to impressing the desired portion of the voltage drop upon the grid-cathode circuit of said thermionic tube.

[*Official Gazette August 1, 1933.*]

Disclaimer.

1,455,141.—*Percival D. Lowell* and *Francis W. Dunmore*, Washington, D. C. RADIO RECEIVING APPARATUS. Patent dated May 15, 1923. Disclaimer filed July 8, 1933, by the patentees and the exclusive licensee, *Dubilier Condenser Corporation.*

Therefore enter their disclaimer as follows:

(1) To any "source of alternating current for supplying power to said amplifying means" as set forth in claim 1 except such as supplies raw alternating current to the cathode heating circuit or circuits of such amplifying means and rectified current to the plate circuit or circuits of such amplifying means; to any "plurality of means in circuit with said amplifying means for eliminating the hum of said alternating current in said apparatus" except such means as comprises:

(*a*) a connection from the grid to the amplifying means to the cathode thereof at a point not subjected to the influence of variations of the cathode heating current; (*b*) elements connected between the stages of said amplifying means which prevent the passage of power supply frequencies; and (*c*) a resistor shunted by a condenser interposed in the circuit between the grid and cathode of the amplifying means where said condenser forms a low impedance path for both signal and power supply frequencies and wherein the voltage drop across said resistor provides a negative bias for the grid of the amplifying means.

(2) To any "source of alternating current for supplying power to said amplifying means "as set forth in claim 2 except such as supplies raw alternating current to the cathode heating circuit or circuits and rectified current to the plate circuit or circuits; to any "means connected to said amplifying and rectifying means for eliminating the hum of said alternating current in said apparatus" except as comprises: (*a*) a connection from the grid of the amplifying means to the cathode thereof at a point not subjected to the influence of variations of cathode heating current; (*b*) elements connected between the stages of said amplifying means and between said amplifying and rectifying means which prevent the passage of power supply frequencies; and (*c*) a resistor shunted by a condenser interposed between the grid and the cathode of the amplifying means, where said condenser forms a low impedance path for both signal and power supply frequencies and wherein the voltage drop across said resistor provides a negative bias for the grid of the amplifying means.

(3) To any "source of alternating current for supplying power to said amplifying means" as set forth in claim 3 except such as supplies raw alternating current to the cathode heating circuit or circuits and rectified current to the plate circuit or circuits of such amplifying means; to any "sepa-

rate means connected to each of said amplifying and rectifying means for eliminating the hum of said alternating current" except as comprises: (*a*) connecting the grid of the amplifying means to the cathode thereof at a point not subjected to the influence of variations of the cathode heating current, and (*b*) elements connected between the "means for amplifying said signal energy at radio frequencies" and the "means for rectifying said energy" which prevent the passage of power supply frequencies.

(4) To any "source of alternating current for supplying power to said amplifying means" as set forth in claim 4 except such as supplies raw alternating current to the cathode heating circuit or circuits of such amplifying means and rectified current to the plate circuit or circuits of such amplifying means; to any "means connected to each of said amplifying, rectifying, and reproducing means for eliminating the hum of the alternating current" except such as comprises: (*a*) connecting the grid of the amplifying means to the cathode thereof at a point not subjected to the influence of variations of the cathode heating current, and (*b*) elements connected between stages of the amplifying means and between the amplifying means and the rectifying means which prevent the passage of power supply frequencies.

(7) To any "means in different parts of said circuits for eliminating the hum of the alternating current" as set forth in claim 7 except such as comprises: (*a*) connecting the grids of said amplifying means to the cathodes thereof at a point not subjected to the influence of variations of the cathode heating current; (*b*) elements interconnecting the stages of the "means for amplifying said energy at radio frequencies" and elements interconnecting the "means for amplifying said energy at radio frequencies" with the "means for rectifying said energy" which prevent the passage of alternating current hum; and (*c*) such means as a resistor shunted by a condenser connected in a circuit between the grid and cathode of

the "means for amplifying said energy at radio frequencies" where the said condenser forms a low impedance path for both signal and power supply frequencies.

(13) To any "means for supplying the rectified energy to circuits of said vacuum tube amplifiers" as set forth in claim 13, except such as supplies such rectified energy to the plate circuits of said vacuum tube amplifiers and also supplies raw alternating current to the cathode heating circuit or circuits of said amplifiers; to any "means connected in each of the circuits of said amplifiers, detector and reproducer for eliminating the hum of said alternating current" except such as comprises: (*a*) connecting the grids of the amplifiers to the cathodes thereof at a point not subjected to the influence of variations of the cathode heating current; (*b*) elements interconnecting the stages of said radio frequency vacuum tube amplifier and interconnecting the output of said radio frequency vacuum tube amplifier with the detector which prevent the passage of power supply frequencies; and (*c*) a resistor shunted by a condenser and connected in the circuit between the grid and cathode of each of said amplifiers, where the said condenser forms a low impedance path for both signal and power supply frequencies.

(14) To any "means in each of said circuits for eliminating the hum" as set forth in claim 14, except as comprises: (*a*) connecting the grids of vacuum tubes to the cathodes thereof at a point not subjected to the influence of variations of the cathode heating current, and (*b*) interconnecting the plurality of vacuum tubes which amplify the signal at radio frequencies through elements which prevent the passage of power supply frequencies.

(15) To any "vacuum tubes" as set forth in claim 15 except vacuum tubes which have the grid electrodes thereof connected with the cathodes thereof at a point not subjected to

the influence of variations of the cathode heating current; and to any "circuits interconnecting said electrodes and said detector" as specified in said claim except such circuits as include an inductively coupled radio frequency transformer.

(16) To any "source of alternating current for supplying power to said amplifying means" as set forth in claim 16 except such as supplies raw alternating current to the cathode heating circuit or circuits and rectified current to the plate circuit or circuits; to any "means connected in circuit with said rectifying means for smoothing out the rectified current and supplying power to said amplifying means" except such as also prevents distortion of the signal current.

(18) To any "source of alternating current for supplying power to said circuits" as set forth in claim 18 except such as supplies raw alternating current to the cathode heating circuit and rectified current to the plate circuit or circuits of the vacuum tubes; to any "means connected in circuit with said grid and plate electrodes for eliminating the hum" except as comprises: (*a*) connecting the grids of the vacuum tubes to the cathode thereof at a point not subjected to the influence of variations of the cathode heating current, and (*b*) interposing filter elements in the plate circuit to reduce fluctuation in power supply frequencies; and to any "circuits interconnecting said electrodes" except as include a radio frequency transformer.

(19) To any "source of alternating current" as set forth in claim 19 except as supplies raw alternating current to the cathode heating circuit or circuits of said vacuum tubes; and to any "circuits interconnecting said electrodes" except as include elements which prevent the passage of power supply frequencies.

(20) To any "source of alternating current for supplying power to said amplifying means" as set forth in claim 20

except as supplies raw alternating current to the cathode heating circuit or circuits of said amplifying means and rectified current to the plate circuit or circuits of said amplifying means.

(21) To any "source of alternating current for supplying power to said tubes" as set forth in claim 21 except as supplies raw alternating current to the cathode heating circuit or circuits and rectified current to the plate circuit or circuits of said tubes.

[*Official Gazette August 1, 1933.*]

APPENDIX B.

SEC. 4917. Whenever, through inadvertence, accident, or mistake, and without any fraudulent or deceptive intention, a patentee has claimed more than that of which he was the original or first inventor or discoverer, his patent shall be valid for all that part which is truly and justly his own, provided the same is a material or substantial part of the thing patented; and any such patentee, his heirs or assigns, whether of the whole or any sectional interest therein, may, on payment of the fee required by law, make disclaimer of such parts of the thing patented as he shall not choose to claim or to hold by virtue of the patent or assignment, stating therein the extent of his interest in such patent. Such disclaimer shall be in writing, attested by one or more witnesses, and recorded in the Patent Office; and it shall thereafter be considered as part of the original specification to the extent of the interest possessed by the claimant and by those claiming under him after the record thereof. But no such disclaimer shall affect any action pending at the time of its being filed, except so far as may relate to the question of unreasonable neglect or delay in filing it.

SEC. 4922. Whenever, through inadvertence, accident, or mistake, and without any willful default, or intent to defraud

or mislead the public, a patentee has, in his specification, claimed to be the original and first inventor or discoverer of any material or substantial part of the thing patented, of which he was not the original and first inventor or discoverer, every such patentee, his executors, administrators, and assigns, whether of the whole or any sectional interest in the patent, may maintain a suit at law or in equity, for the infringement of any part thereof, which was bona fide his own, if it is a material and substantial part of the thing patented, and definitely distinguishable from the parts claimed without right, notwithstanding the specifications may embrace more than that of which the patentee was the first inventor or discoverer. But in every such case in which a judgment or decree shall be rendered for the plaintiff, no costs shall be recovered unless the proper disclaimer has been entered at the Patent Office before the commencement of the suit. But no patentee shall be entitled to the benefits of this section if he has unreasonably neglected or delayed to enter a disclaimer.

FILE COPY

No. 388

FILED
OCT 5 1935
CHARLES ELMORE CROPLEY
CLERK

Supreme Court of the United States

October Term, 1935.

A. G. TRIPLETT, R. M. TRIPLETT, A. NELSON, C. M. TRIPLETT, JR., and THE BALTIMORE GASLIGHT COMPANY, *Petitioners,*

vs.

PERCIVAL D. LOWELL, FRANCIS W. DUNMORE and DUBILIER CONDENSER CORPORATION, *Respondents.*

REPLY MEMORANDUM FOR PETITIONERS IN SUPPORT OF PETITION FOR WRIT OF CERTIORARI.

SAMUEL E. DARBY, JR.,
Counsel for Petitioner.

Supreme Court of the United States

October Term, 1935.

A. G. TRIPLETT, R. M. TRIPLETT, A. NELSON, C. M. TRIPLETT, JR., and THE BALTIMORE GASLIGHT COMPANY, *Petitioners,*

vs.

PERCIVAL D. LOWELL, FRANCIS W. DUNMORE and DUBILIER CONDENSER CORPORATION, *Respondents.*

REPLY MEMORANDUM FOR PETITIONERS IN SUPPORT OF PETITION FOR WRIT OF CERTIORARI.

The purpose of this reply memorandum is to call attention to the decision of the United States Court of Appeals for the Tenth Circuit, rendered September 19, 1935, in the case of *Railway Engineering Equipment Company and Harris Trust & Savings Bank* v. *Oregon Short Line Railway Company.* The opinion is reproduced at the end hereof.

The substance of the decision is that, under the authority of the *Ensten* case (*Ensten* v. *Simon Ascher Co.,* 282 U. S. 445), the majority of the Court of Appeals for the Tenth Circuit has dismissed an appeal from a decision of a District Court invalidating patent claims because the plaintiff allowed 51 days to elapse after the District Court rendered its decision before a decree to that effect was entered, and

thereafter allowed 89 days to elapse before filing a petition for appeal and securing an order allowing the appeal.

The issue before the Court of Appeals and the basis of its conclusion are thus tersely stated in the opinion.

> "The point here is, Did appellant permit an unreasonable time to elapse without disclaiming after the District Judge declared the claim sued on to be invalid, or suspend its duty to disclaim within such reasonable time by promptly appealing from that decision? The time given the litigant by statute within which to appeal is not a measure of what is promptness in making disclaimer."

The extreme to which the Court of Appeals for the Tenth Circuit has gone in applying the disclaimer statute in this case, as compared with the failure of the Court of Appeals for the Fourth Circuit to apply the disclaimer statute at all in petitioners' case, fittingly illustrates, we submit, the desirability of and great need for this Court to grant a review in petitioners' case so that the judicial application of the disclaimer statute may be made uniform and consistent. It likewise fittingly illustrates the want of pertinency to the questions presented by the petition for certiorari in this case of the old authorities cited by respondents' brief in opposition thereto, all of which were prior to the decision of this Court in the *Ensten* case.

Respectfully submitted,

SAMUEL E. DARBY, JR.,
Counsel for Petitioner.

Opinion.

UNITED STATES CIRCUIT COURT OF APPEALS

TENTH CIRCUIT

No. 1260—APRIL TERM, 1935.

RAILWAY ENGINEERING EQUIPMENT COMPANY and HARRIS TRUST & SAVINGS BANK, *Appellants,* *vs.* OREGON SHORT LINE RAILROAD COMPANY, *Appellee.*	Appeal from the District Court of the United States for the District of Utah.

(September 19, 1935)

KENAZ HUFFMAN (Hervey S. Knight, Beverly S. Clendenin and Parkinson & Lane were with him on the brief) for appellants.

L. B. MANN (C. C. Dorsey and Geo. H. Smith were with him on the brief), for appellee.

Before LEWIS, PHILLIPS and MCDERMOTT, *Circuit Judges.*
LEWIS, *Circuit Judge,* delivered the opinion of the court.

This is a motion to dismiss an appeal in a patent infringement suit. The bill was filed November 12, 1932. It charged that on May 26, 1921, Alfred W. Towsley and Spencer Otis were the original, first and joint inventors of a new

and useful Locomotive Terminal for which U. S. Letters Patent No. 1,413,365 was issued to them on April 18, 1922, on their application of May 26, 1921; that on May 22, 1922, Spencer Otis was the original, first and sole inventor of a new and useful Direct Steaming System for Locomotives for which U. S. Letters Patent No. 1,592,618 was issued to him on July 13, 1926, on his application of May 22, 1922; that on November 29, 1926, Leland G. Plant was the original, first and sole inventor of a new and useful Locomotive Terminal for which U. S. Letters Patent No. 1,686,103 was issued him on October 2, 1928, on his application filed November 29, 1926; that defendant, appellee here, had infringed each of said letters patent by erecting or using at Pocatello, Idaho, a Direct Steaming System embodying the inventions of each of said letters patent, and unless enjoined it would continue such infringement. Appellant sued as assignee of the three patents.

On December 2, 1932, defendant moved that the court require the plaintiff to specify the claims of the patents on which it would rely as having been infringed. On February 7, 1933, the plaintiff below filed what it termed its answer to defendant's motion for further particulars in which it said that so far as it was able to then state and without admitting non-infringement of claims not specified it would rely upon claim 5 of the Towsley and Otis patent, claim 4 of the Otis patent, and claims 8, 11, 14 and 15 of the Plant patent, and it specified its amendments in this wise, by inserting in the complaint in a named paragraph after patent No. 1,413,365, "and particularly claim 5 thereof", by inserting after patent No. 1,392,618, "and particularly claim 4 thereof", and by inserting after patent No. 1,686,103, "and particularly claims 8, 11, 14 and 15 thereof".

On October 2, 1933, the plaintiff amended its bill in purely formal respects.

Claim 5 of the Towsley and Otis patent is this:

> "5. In combination with a locomotive terminal house, a station having trackage for receiving a locomotive from service, means for subjecting the locomotive to service-restoring treatment, and means for supplying live steam from an extraneous source to the boiler of the locomotive in said station in quantity sufficient to restore the locomotive to the power of self propulsion."

That patent contains twenty-one additional claims.

Claim 4 of the Otis patent is this:

> "4. The method of refilling empty locomotive boilers and developing steam pressure therein, which consists in taking water from a non-steam-generating water source, and introducing it into the boiler, then while continuing the supply of water, taking a body of steam from a separate source and releasing it into mixing and heating relation to such water, until a desired water level is attained, the components of water and steam being of such temperature and so proportioned that the contents of the boiler will have attained a steaming temperature on or before reaching said level, and then continuing the introduction of the steam without the water, until a working pressure is developed in the boiler."

That patent contains three additional claims.

The 8th claim of the Plant patent is this:

> "8. The method of storing steam locomotives at a terminal, which consists in discharging the locomotive fire at a fire dumping station, placing the locomotive at the storage station, emptying and refilling the locomotive boiler at the storage station and there re-establishing and subsequently maintaining a working steam pressure with corresponding water tem-

> perature throughout the locomotive boiler, without fire in the locomotive, then moving the locomotive from the storage station by self propulsion, and thereafter igniting the fire and dispatching the locomotive for service."

That patent contains in addition to the four claims sued on seventeen other claims.

Defendant's answer denied invention, alleged anticipation, pleaded the prior state of the art and use by named railroads.

When the trial came on, September 25, 1933, appellant withdrew all claims under the Towsley and Otis patent and relied on claim 4 of the Otis patent and claims 8, 11, 14 and 15 of the Plant patent. Final hearing, including arguments of counsel, closed on October 3, 1933, and the court took the case under advisement.

The condensed and narrative statement of the evidence given in court and by depositions was not lodged with the clerk until February 11, 1935. It was approved by the trial judge on March 9, 1935. Prior thereto and on July 5, 1934, the District Judge rendered and filed in the clerk's office a written opinion in which he found that Raymer patent No. 788,376 dated April 25, 1905, and Gale patent No. 831,337 dated September 18, 1906, covered a method for supplying and using hot water in washing out and refilling locomotive boilers preparatory to returning them to service, and that these methods were quite generally adopted and used by railroads as licensees during the life of those patents and that defendant at the time of the alleged infringements was using the system deseribed in said patents, and that in his opinion the Otis claim was anticipated by both Raymer and Gale, and that both Otis and Plant were invalid for lack of invention in view of the state of the art at the time of applications therefor. Both parties ac-

cepted the written opinion of the Court as a sufficient finding of facts and conclusions of law. No other document, order or proceeding of any nature appears in the record to have been filed or taken thereafter until August 25, 1934, on which day the District Judge signed a decree of dismissal, and it was filed with the clerk and the decree entered on that day. Thus, the case stood until November 22, following, on which day appellant filed its petition for this appeal, its assignment of errors, and the court on that day entered its order granting the appeal and approved the appeal bond. The appeal was not lodged here until April 1, 1935, whereupon appellee filed its motion to dismiss the appeal, having served appellant's counsel with copy thereof April 6, 1935.

The ground of appellee's motion to dismiss is that the alleged errors of the trial court have become moot questions because appellant-plaintiff unreasonably neglected and delayed in appealing to this court or to enter disclaimers in the Patent Office following the decision of the trial court, hence the patents in suit are invalid.

From the foregoing statement of facts it appears that 51 days elapsed after the District Judge rendered his decision in the cause before final decree was entered, 140 days lapsed after said decision before this appeal was asked and allowed, and 89 days elapsed between entry of the decree and filing petition for appeal and its allowance.

Appellee relies on Sections 4917 and 4922, Rev. Stat. (35 U. S. Code, Secs. 65 and 71), and the construction that has been placed upon it by the Supreme Court in Ensten v. Simon, Ascher & Co., 282 U. S. 445. Many other cases in inferior federal courts are there cited and discussed. See also, Ensten v. Rich-Sampliner Co., 13 F. (2) 132; Radio Condenser Co. v. General Instrument Corp., 65 F. (2) 458; Otis Elev. Co. v. Pac. Fin. Corp. 68 F. (2) 664 and 71 F.

(2) 641; Better Packages v. Link & Co., 74 F. (2) 679. This is an old statute (Secs. 7 and 9, Act of March 3, 1937, 5 Stat. 191), and with slight modifications has been continued. It relieves the patentee who procures allowance of an invalid claim or claims through inadvertence, accident or mistake, and without any fraudulent or deceptive intention, if he complies with the statute, from the rule that an invalid claim renders the whole patent void. Its requirement, as construed, is that the patentee with such promptness as the circumstances permit must either disclaim in the Patent Office the claim which a competent court has declared to be invalid or with like promptness appeal therefrom; and unless he does one or the other there can be no exemption from the general rule. The point here is, Did appellant permit an unreasonable time to elapse without disclaiming after the District Judge declared the claims sued on to be invalid, or suspend its duty to disclaim within such reasonable time by promptly appealing from that decision? The time given the litigant by statute within which to appeal is not a measure of what is promptness in making disclaimer. It begins to run when a competent court declares the claim or claims invalid. In the Ensten case at page 455, 282 U. S., the court said:

> "In certain definitely defined circumstances, and to the end that the mistaken but honest inventor may obtain relief from the old rule, the disclaimer provisions permit him to deprive the public temporarily of complete freedom from the assertion of a monopoly apparently valid, but not so in fact. When a competent court has declared his pretensions without sufficient foundation, we think good faith and the spirit of the enactment demand that he act with such promptness as the circumstances permit either to vindicate his position or to relieve the public from further evil effects of his false assertion. But for the benign provisions of the statute, such an asser-

> tion would invalidate the whole patent; and these provisions were intended to protect only those who by prompt action either seek to overturn an adverse ruling or retreat from a false position."

That decision was rendered two years and eight months before the trial closed in the instant case. The statute itself withholds its benefits from the patentee who unreasonably neglects or delays to make disclaimer. Notwithstanding, appellant let 51 days run after the court's decision without having a final decree entered, and then 89 days more before asking the court to grant appeal,—a simple procedure that could have been taken the day the decree was entered. The statute granting appeal (Act February 13, 1925) provides that application therefor must be made "within three months after the entry of judgment or decree". Appellant here waited until the 89th day. In Minerals Separation v. Butte etc. Min'g Co., 250 U. S. 336, the delay in filing disclaimer was 107 days after the decision of the court holding three claims in suit invalid. It was held not to be unreasonable neglect or delay because the owners of the patent in suit resided in a foreign country and World War conditions then prevailed.

Inventions, letters patent therefor, and rights under them are within the exclusive power of Congress. The disclaimer statute was intended as a protection to a patentee under the conditions which it sets forth. Its purpose was also in public interest. It is not unfair. The patentee is required to take action and must not unreasonably delay or neglect to do so. Whether he chooses to disclaim or appeal it must be done with promptness, and in that we think appellant failed. The motion will be sustained. It is so ordered.

We do not dissent from what Judge McDermott says in his concurrence respecting Equity rule 75, appellant's failure to comply therewith and his conclusion therefrom as an additional ground of dismissal.

McDERMOTT, *Circuit Judge*, concurring:

There has been no attempt at all to condense a large part of the evidence. It consists of a great mass of documentary proof, the condensation of the material parts of which would have been a laborious task. The correspondence between counsel disclose that a large box of these original exhibits was transmitted to the Clerk of this court under our Rule 32 designed for models, diagrams, and other exhibits, which cannot be condensed or reproduced on the printed page. That rule was not designed to except from Equity Rule 75 lengthy documents which may be condensed, or only a small part of which has any relevancy.

The situation is aggravated by the circumstance that counsel knew of the rules and the proper interpretation thereof. One letter discloses that the clerk of the trial court advised counsel "that he is sure the box of exhibits will be returned as not properly included in the record."

Nearly four years ago, Hughes v. Reed, 46 F. (2d) 435, this court called attention to the plain language of Equity Rule 75, and said:

> "The rule is applicable to 'the evidence' and is not confined to 'the testimony of witnesses.' And effort has been made to avoid printing the testimony of witnesses in question and answer form, although parts of that are a mere combination of question and answer, rather than a narration. But no effort has been made to 'state in simple and condensed form' the 340 exhibits introduced."

It would be impracticable for each member of this court to cull through a large box of printed matter in search for the part of each document material to this appeal. The box would have to go to each of the judges in turn, and it would require weeks of steady reading to sift the wheat from the chaff. If no other cases were pending in this court, it would be possible, in time, to accomplish the task.

But other cases are pending, in which litigants are entitled to a prompt decision. Counsel are familiar with their own exhibits, and can summarize the material parts much quicker than we. It will require much less time on their part than ours. We should not be asked to spend ten hours to save counsel one.

Since appellant did not prepare and file with the clerk of the district court a condensed and narrative statement of all the material evidence, the appeal should be dismissed.

I do not, however, agree that appellant has lost its patents because it failed to prosecute its appeal more promptly. Appellant, not having disclaimed under 35 USCA 71, must, to save its patents, take appropriate steps to vindicate its position, which in this case is by this appeal. That step must likewise be taken without unreasonable neglect or delay. But I do not believe the courts should say there has been unreasonable neglect or delay if the appeal is taken within the time prescribed by statute. Congress has prescribed a time, determined by it to be reasonable, for appeals. As communication facilities have improved, the time has been shortened; it is now three months in some cases, thirty days in others, and five days in still others. I doubt the wisdom of the courts holding that the time prescribed by Congress is unreasonable.

I agree that three months is not needed to determine whether an appeal should be taken, but I think a definite and certain shorter period should be prescribed, for the future only, by the rule-making power, and that the courts should not declare a patent void where an appeal is taken within the period prescribed by Congress because under the facts in a particular case, the appeal might have been taken earlier.

The rule adopted by the majority opinion injects a troublesome fact question into patent cases at the threshold of the appeal—a fact to be determined by the court "either

by its own investigation or the verdict of a jury." Ensten v. Simon, 282 U. S. 445, 453. It displaces certainty with uncertainty. It makes for delay and not expedition, and increases the costs of litigation. Take this case. The motion to dismiss was filed in April. The fact question has been explored by both sides. Printed and typewritten briefs have been submitted. Oral argument has been had. Although a decision of the question has been reached with all convenient speed, it is now September. "As promptly as possible" is such an elastic question of fact that astute patent lawyers, anxious to avoid a review on the merits, can in most cases make a showing that an appeal might forsooth have been taken a few days earlier.

The language used in Ensten v. Simon, supra, supports the majority view. But there was neither disclaimer nor appeal in that case for 23 months. The question arose on an appeal from a decision adjudging a patent invalid for failure to disclaim or appeal for 23 months. It did not adjudge a patent void where appeal was taken within the period prescribed by Congress, and the opinion should be read against the background of the facts. In the long history of the disclaimer statute, no patents ever before has been held void because an appeal was not taken prior to the expiration of the statutory period. On the contrary, courts frequently have said that disclaimers must be filed within a reasonable time—generally thirty days—after the statutory time for appeal or application for certiorari has expired.

The trend of the times is very strongly toward expediting litigations, a trend with which I am heartily in accord. But it does not make for expedition to substitute an indefinite standard of reasonable promptness for a specific period fixed by statute.

A true copy.

Attest:

Clerk U. S. Circuit Court of Appeals,
Tenth Circuit.

FILE COPY

FILED
JAN 8 193
CHARLES ELMORE CRO

Supreme Court of the United States

October Term, 1935

No. 388

A. G. TRIPLETT, R. M. TRIPLETT, A. NELSON, C. M. TRIPLETT, JR., and THE BALTIMORE GASLIGHT COMPANY,
Defendants-Petitioners,

vs.

PERCIVAL D. LOWELL, FRANCIS W. DUNMORE, and DUBILIER CONDENSER CORPORATION,
Plaintiffs-Respondents.

BRIEF FOR PETITIONERS.

SAMUEL E. DARBY, JR.,
Counsel for Petitioners.

COOK & MARKELL,
Attorneys for Petitioners.

CHARLES MARKELL,
of Counsel.

INDEX

Nature of the Case 1

Opinions of the Courts below 2

Jurisdiction 2

Assignment of Errors 2

Statement of the Case 3

Summary of Argument 5

Argument 6

POINT I—The patents are invalid because the patentees not only failed to disclaim the claims which had been finally adjudicated to be invalid more than nine months prior to the filing of the bill of complaint in the present case, but they deny any necessity for doing so 6

The contentions of the parties 8

The disclaimer statute 9

The opinion of the Court of Appeals below 15

POINT II—The patents are invalid because the disclaimers which were filed by the patentees did not, in fact, disclaim, but purported to rewrite the claims to which they are directed 18

POINT III—The patents are invalid because the patentees unreasonably neglected or delayed to enter a disclaimer of the invalidated claims subsequent to final adjudication of invalidity thereof 22

Conclusion 27

PAGE

Appendix A 28

Disclaimer as to Dunmore Patent No. 1,635,117 28

Disclaimer as to Lowell and Dunmore Patent No. 1,455,141 30

Appendix B 35

Section 4917 R. S. 35

Section 4922 R. S. 36

Appendix C 37

The cases cited by the Court of Appeals for the Fourth Circuit in the footnote to its decision, and referred to as establishing "long continued practice in patent cases inconsistent" with petitioner's contentions here made 37

Cases in the Supreme Court prior to the establishment of the Circuit Courts of Appeals (prior to the Act of 1891) 37

Cases in the Supreme Court where the patent was held invalid by the Circuit Court of Appeals for one Circuit and later held valid by the Circuit Court of Appeals for another Circuit 38

Cases in Circuit Courts of Appeals where the patent was first held to be invalid by one Circuit Court of Appeals and later held to be valid by another Circuit Court of Appeals (omitting cases which reached the Supreme Court) 43

Summary 47

List of Cases.

PAGE

Altoona Publix Theatres v. American Tri-Ergon, 294 U. S. 477 ..... 3, 21
Bassick Manufacturing Co. v. Adams Grease Gun Corp., 39 Fed. (2) 904 ..... 24, 25
Bassick Manufacturing Co. v. Adams Grease Gun Corp., C. C. A. Second, 52 Fed. (2) 36 ..... 14, 24
Better Packages v. Link, 74 Fed. (2) 679 ..... 16, 24
Better Packages, Inc. v. Nashua Package Sealing Co., C. C. A. Second, 74 Fed. (2) 682 14
Emery v. J. G. McCrory Co., 4 Fed. Supp. 167 ..... 15, 24
Ensten v. Simon Ascher, 39 Fed. (2) 71 23
Ensten v. Simon Ascher & Co., 282 U. S. 455 ..... 13, 22
Excelsior v. Williamson Heater Co., 269 Fed. 614 24
General Chemical Co. v. Standard Wholesale Phosphate & Acid Works, Inc., 8 Fed. Supp. 265 25
General Chemical Co. v. Standard Wholesale Phosphate & Acid Works, Inc., C. C. A. Fourth, 77 Fed. (2) 230 25
Herman v. Youngstown Car Manufacturing Co., 191 Fed. 579 24
Higgin Manufacturing Co. v. Watson, 263 Fed. 378 24
R. Hoe & Co. v. Goss Printing Press Co., 31 Fed. (2) 565 ..... 12, 23
Lowell, et al. v. Radio Corporation of America, 50 Fed. (2) 305 3
Lowell, et al. v. Radio Corporation of America, 50 Fed. (2) 309 3
Lowell, et al. v. Triplett, et al., 77 Fed. (2) 556 ..... 2, 18
The Mantle Lamp Company of America v. Aluminum Products Company (No. 590 pending in this Court) 7, 17
Minerals Separation v. Butte, 250 U. S. 336 26
Otis Elevator Co. v. Pacific Finance Corp., 68 Fed. (2) 664 ..... 15, 25
Radio Condenser Co. v. General Instrument Corp., 65 Fed. (2) 458 14
Radio Corp. v. Radio Engineering Laboratories, 293 U. S. 1 17
Railway Engineering E. Co. v. Oregon Short Line R. Co., 79 Fed. (2) 469 25

Cases Cited in Appendix C.

	PAGE
Abercrombie & Fitch v. Baldwin, 245 U. S. 198	39
Backstay Machine & Leather Co. v. Hamilton, 262 Fed. 411	46
Corona Cord Tire Co. v. Dovan Chemical Corp., 276 U. S. 358	42
Diamond Rubber Co. v. Consolidated Rubber Tire Co., 220 U. S. 428	38
Dowagiac Manufacturing Co. v. Minnesota Moline Plow Co., 235 U. S. 641	39
Expanded Metal Co. v. Bradford, 214 U. S. 366	38
Franc-Strohmenger & Cowan v. Arthur Siegman, 27 Fed. (2) 785	47
Hanover Star Milling Co. v. Metcalf, 240 U. S. 403	39
Imperial Bottle Cap and Machine Co. v. Crown Cork & Seal Co., 139 Fed. 312	45
Maitland v. B. Goetz Manufacturing Co., 86 Fed. 124	43
McNeely v. Williames, 96 Fed. 978	43
Mecanno Limited v. John Wanamaker, 253 U. S. 136	41
New York Scaffolding Co. v. Chain Belt Co., 254 U. S. 32	41
Pieper v. S. S. White Dental Manufacturing Co., 228 Fed. 30	46
Radio Corp. v. Radio Engineering Laboratories, 293 U. S. 1	43
Railroad Supply Co. v. Elryia Iron & Steel Co., 244 N. S. 285	39
Saranac Automatic Machine Corp. v. Wirebounds Patents Co., 282 U. S. 704	42
T. H. Symington v. National Malleable Castings Co., 250 U. S. 383	40
John E. Thropp's Son's Co. v. Seiberling, 264 U. S. 320	41
Thompson-Houston Electric Co. v. Black River Traction Co., 135 Fed. 759	45
Wenborne-Karpen Dryer Co. v. Cutler Dry Kiln Co., 290 Fed. 625	46
Westinghouse Electric & Manufacturing Co. v. Stanley Instrument Co., 133 Fed. 167	44

Supreme Court of the United States

October Term, 1935

No. 388

A. G. TRIPLETT, R. M. TRIPLETT, A. NELSON, C. M. TRIPLETT, JR., and THE BALTIMORE GASLIGHT COMPANY,
Defendants-Petitioners,

vs.

PERCIVAL D. LOWELL, FRANCIS W. DUNMORE, and DUBILIER CONDENSER CORPORATION,
Plaintiffs-Respondents.

BRIEF FOR PETITIONERS.

Nature of the Case.

This is a patent infringement suit brought by plaintiffs-respondents as owners of Lowell and Dunmore Patent No. 1,455,141 and Dunmore Patent No. 1,635,117.

The defendants-petitioners are copartners operating a retail store in Baltimore, Maryland, under the name of The Baltimore Gaslight Company. Their sale of a Stewart-Warner radio broadcast receiver is the act charged to constitute infringement of claims 1 to 4, 13 and 14 of Patent No. 1,455,141, and claims 9, 11 and 12 of Patent No. 1,635,117.

Opinions of the Courts below.

Judge COLEMAN, in the District Court of Maryland, dismissed the bill of complaint as to the two patents because plaintiffs unreasonably delayed in adequately disclaiming claims of the patents which previously had been declared to be invalid by the Court of Appeals for the Third Circuit. The opinion of the District Court is unreported, but is found in Volume I of the Record, page 263.

The Court of Appeals for the Fourth Circuit reversed the decree of the District Court, and ordered the cause remanded for trial on the merits of the issues of validity and infringement raised by the pleadings (77 Fed. [2] 556).

Jurisdiction.

The case is here on writ of certiorari granted by this Court on December 9th, 1935, jurisdiction having been invoked under Section 347 U. S. Code, Title 28 (80 L. Ed. 222).

Assignment of Errors.

1. The Court of Appeals erred in reversing the decree of the District Court and reinstating the bill of complaint as to the two patents in suit.

2. The Court of Appeals erred in failing to hold the two patents invalid because of the invalid disclaimers filed with respect thereto.

3. The Court of Appeals erred in failing to hold the two patents invalid for failure to file adequate disclaimers of the invalid claims within a reasonable time after the

invalidation thereof and prior to the filing of the bill of complaint, which was more than nine months subsequent to the finality of invalidation.

Statement of the Case.

In the two cases of *Lowell et al.* v. *Radio Corporation of America* (50 Fed. [2] 305,309) Judge WOOLLEY, speaking for the Court of Appeals for the Third Circuit, found claim 9 of Patent No. 1,635,117 and claims 3 and 14 of Patent No. 1,455,141 to be invalid on the ground that they covered mere unpatentable aggregations, and defined no patentable invention over what was well known and in use in the prior art. Petitions for rehearing were denied on July 6th, 1932, and this Court denied writs of certiorari on October 25th, 1932 (287 U. S. 648, 650).

On July 8th, 1933—*eight months and thirteen days after the denial of certiorari*—plaintiffs filed disclaimers in the Patent Office with respect to certain claims of each of the patents, including the claims which had been held to be invalid.* The disclaimers, however, did not purport to disclaim the invalid claims. On the contrary, the admitted intent and effect of the disclaimers was to import into the claims limitations not therefore included therein. In other words, the disclaimer filed with respect to each of the patents was of the type and in the form condemned by this Court in *Altoona Publix Theatres* v. *American Tri-Ergon*, 294 U. S. 477.

---

* The disclaimers are printed in full at the end hereof as Appendix A (pp. 28-35).

Indeed, plaintiffs contended in the Courts below that the claims should be treated as though no disclaimers had been filed.

The District Court said as to the disclaimers (Vol. I, p. 263):

> "they seem to me not to disclaim at all".

The Court of Appeals below based its decision on an assumption to that effect. It said (Vol. I. p. 424; 77 Fed. [2] 556, 559):

> "We may assume, for the purposes of the pending case, that in effect no disclaimer has been filed as to the claims passed on in the Third Circuit * * * ".

On August 17, 1933—*over nine months after the denials of certiorari*—plaintiffs filed the present suit in Maryland charging infringement of the invalidated claims of the two patents, as well as of other claims in both patents which were not involved in the prior suits. The defendants in the present suit are not connected in any way with the defendant in the cases in the Third Circuit.

When the case was called to trial, defendants presented a motion to dismiss the bill of complaint as to the two patents on the ground that plaintiffs' delay of eight months and thirteen days in filing disclaimers of the invalidated claims of the patents was unreasonable, and, in consequence, the patents were wholly invalid (Vol. 1, p. 19). The District Court denied this motion (Vol. 1, p. 46).

Thereupon, defendants presented a motion to dismiss the bill of complaint as to the two patents on the ground that no adequate disclaimer had been filed because of the

admitted fact that the disclaimers did not purport to, or in fact, disclaim anything, but merely imported into the claims limitations not theretofore included therein (Vol. 1, p. 55).

Though admitting that no disclaimers had been filed, or were intended to have been filed to meet the invalidating decisions of the Third Circuit Court of Appeals, plaintiffs opposed this motion on the ground that there was nothing to compel them to file disclaimers, and thereby avail themselves of the benefits of the disclaimer statute; that the provisions of the disclaimer statute were applicable to only those patentees who voluntarily sought to avail themselves of the proffered benefits thereof; that the decisions of the Circuit Court of Appeals for the Third Circuit invalidating some of the claims of the two patents were effective only against the defendant in those cases; and that the plaintiffs by *not* disclaiming the invalidated claims could sue on those claims, as well as on other claims, in any Circuit, at any time during the terms of the patents.

The District Court granted the second motion and dismissed the bill as to the two patents (Vol. I, pp. 71, 263).

The Court of Appeals for the Fourth Circuit reversed the District Court, sustained plaintiffs' contentions, and remanded the case for a trial on the merits (77 Fed. [2] 556.*

Summary of Argument.

1. The patents are invalid because the patentees not only failed to disclaim the claims which had been finally adjudicated to be invalid more than nine months prior

---

* The litigation involved a third patent. We are not here concerned with the disposition thereof made by the Court of Appeals.

to the filing of the bill of complaint in the present case, but they deny any necessity for doing so.

2. The patents are invalid because the disclaimers which were filed by the patentees did not, in fact, disclaim, but purported to rewrite the claims to which they are directed.

3. The patents are invalid because the patentees unreasonably neglected or delayed to enter a disclaimer of the invalidated claims subsequent to final adjudication of invalidity thereof.

ARGUMENT.

POINT I.

The patents are invalid because the patentees not only failed to disclaim the claims which had been finally adjudicated to be invalid more than nine months prior to the filing of the bill of complaint in the present case, but they deny any necessity for doing so.

Although the patentees in this case did file disclaimers eight months and thirteen days after the refusal of this Court to review the cases in which the Circuit Court of Appeals for the Third Circuit held specific claims of each of the patents to be invalid, plaintiffs contended in the Courts below, and the Court of Appeals below held, that because the disclaimers did not disclaim the invalid claims, and were not intended to do so, the claims should be regarded as though no disclaimers had been filed with respect thereto.

For the purposes of this first point of our argument we accept plaintiffs' contention and the decision of the Court below to that effect, and regard the patents as though no disclaimers have been filed as to the invalidated claims therein.

Thus, the question here presented is whether or not the plaintiffs may maintain the present suit, against a defendant different from the one involved in the Third Circuit cases, on either the invalidated claims or any other claims of the patents.

In the case of *The Mantle Lamp Company of America* v. *Aluminum Products Company* (No. 590 in this Court, immediately after the argument of which the present case is assigned for presentation) there have been certified to this Court by the Court of Appeals for the Seventh Circuit three questions, the first of which is:

> "Where certain but not all of the claims of a patent are in suit, and all of the claims in suit are held and decreed to be invalid pursuant to a finding and judgment to that effect of the Circuit Court of Appeals of the Circuit, may the owner of the patent maintain a suit afterward brought thereon *in the same judicial circuit* as that in which the first cause was decided, and against a different defendant not involved in the first suit—the second suit being based on the claims held in the prior suit to be invalid and on other claims of the same patent not previously adjudicated—where the owner of the patent wholly failed and omitted to file any disclaimer of the claims held in the first suit to be invalid, and where, between entry of decree of invalidity of the claims in the first suit and the bringing of the second suit *in the same cir-*

cuit, reasonable time had elapsed for filing such disclaimer."*

It will be noted that the foregoing question is limited to the case where the second suit is instituted *in the same judicial circuit* in which the final adjudication of invalidity had previously occurred. In the present case the same question is presented where the second suit, under the same recited circumstances, is filed in a circuit *other* than that in which the final adjudication of invalidity had previously occurred. In other words, the question here presented is—may a patentee, after an unreasonable length of time subsequent to a final decree of invalidation, institute or maintain a suit *anywhere* on the invalidated claims, or (in the absence of a disclaimer of the invalidated claims) on any remaining claims in the patent?

The contentions of the parties.

Respondents insist that by reason of their refusal to disclaim the previously invalidated claims they have the right to bring suit on *any* claims of the patents, *specifically including the invalidated ones,* against any alleged infringer (other than the previous defendant, as to whom the doctrine of *res adjudicata* would apply) in *any* circuit, at *any* time during the terms of the patents.

Petitioners, on the other hand, contend that when one or more claims of a patent have been finally declared to be invalid, the patentee may not *thereafter* institute or maintain a suit in any Court, *on the invalidated claims;* and that moreover, the patentee may not institute or maintain such a suit on any *other* claims of the patent if he has unreason-

* Italics in this brief are ours.

ably neglected or delayed to enter a disclaimer of the invalid claims after the adjudication of invalidity thereof.

Petitioners assert that their contention is based on and supported by the express provisions of the disclaimer statute, as well as by the decisions of this Court and the Circuit Court of Appeals of the Second Circuit.

The disclaimer statute.

Section 4922 R. S., 35 U. S. C. 71, provides—

> "Whenever • • • a patentee has • • • claimed to be the original and first inventor of any material or substantial part of the thing patented, of which he was not the original and first inventor or discoverer, every such patentee • • • *may maintain a suit* at law or in equity, for the infringement of *any part thereof which was bona fide his own* • • • notwithstanding the specification may embrace more than that of which the patentee was the first inventor or discoverer. • • • *But no patentee shall be entitled to the benefits of this section if he has unreasonably neglected or delayed to enter a disclaimer.*" •

It will be seen that the statute grants permission to "maintain" a suit on a patent *with* invalidated claims therein, *but only on claims other than those which have been invalidated,* and only if there has been *no unreasonable delay in disclaiming the invalidated claims.*

Obviously, if no suit may be *maintained* except on those conditions, no suit may be *instituted* except on those conditions.

• Sections 4917 and 4922 R. S. are reproduced in full at the end hereof as Appendix B (pp. 35-36).

The meaning of the statute is clear, and there is no limitation therein stated or implied as to its application. It obviously applies to *all* of the Courts within the jurisdiction of the statute. It applies to the Circuits other than the one in which the prior adjudication of invalidity occurred, as well as to that particular Circuit. No distinction between them is expressed or implied, and none is warranted by any extraneous considerations.

Thus, the language of the statute precludes the thought that a patentee can institute or maintain a suit on previously invalidated claims.

Such a conclusion does not deprive a patentee of any rights to which he is justly entitled. As a matter of public policy, monopolies are in derogation of the public right. A patent monopoly is created by statute in derogation of the public right. Being a creature of statute, a patent is granted only on prescribed statutory conditions, which if not met, prevent a valid grant. Its validity is subject to attack for failure to comply with the statutory requirements each time that it is sought to be enforced. Thus, if a patent is sought to be enforced in one Judicial Circuit and the grant is adjudged valid, that adjudication justly carries great weight, by virtue of the doctrines of *stare decisis* and comity, in subsequent suits by which it is sought to enforce the monopoly. But, in any such subsequent suit, it is possible for the defendant to establish the invalidity of the monopoly, for example, by new evidence not theretofore considered. In this way the public right is safeguarded, and the patentee's rights are protected by being reasonably assured of a review by this Court, because of diversity of opinion, if invalidity is found in the subsequent proceedings.

On the other hand, if, in the suit of first instance, a Court of competent jurisdiction has finally determined the asserted monopoly to be invalid, there is no logical reason why a monopoly, thus invalidated, should be allowed to be again asserted as a basis for further litigation anywhere in the judicial system.

The patentee has not been deprived of his day in Court. His asserted monopoly has been considered, and adversely passed upon. The adverse adjudication has either been accepted or appellate relief exhausted. There is no justification in the statute or in logic for expanding the litigant's proverbial "day in Court" to "a day in a Court of each Judicial Circuit."

It is illogical that Courts of similar jurisdiction should be required to review the same patent grant that has received full consideration by one of them and found to be wanting in legal justification.

Moreover, the patent grant, created by statute in derogation of the public right, can be enforced only in the manner and to the extent expressly prescribed by the statute which created it. There is no expressed or implied sanction in the statute for an attempted enforcement of an invalidated monopoly subsequent to its invalidation. On the other hand, there is the express provision of the disclaimer statute which precludes the attempted enforcement of the monopoly represented by patent claims previously adjudicated to be invalid, by limiting statutory permission of further litigation on the patent to the claims *other* than the invalidated ones, and only if a disclaimer of the invalid claims is filed without unreasonable delay.

It follows, both as a matter of logic and of interpretation of the plain language of the statute, that after a patent

claim has been finally adjudged to be invalid it must be disclaimed, and only by *prompt* disclaimer thereof can there be preserved any enforceable rights that may remain in the patent.

That this is the correct interpretation of the statute has been implied by a recent decision of this Court, and has been expressly held by the courts in the Second Circuit.

Thus, addressing himself directly to the question, Judge LEARNED HAND, speaking for the Court of Appeals for the Second Circuit, in *R. Hoe & Co.* v. *Goss Printing Press Co.*, 31 Fed. (2) 565, said (p. 566):

> "The plaintiff at bar goes further, however, arguing that, even after denial of an application for certiorari, the patentee should not be obliged to disclaim. It argues that the Circuit Court of Appeals of another circuit might disagree with our ruling, and the Supreme Court would then take the case on certiorari and might declare the claims valid. A disclaimer would merely destroy this right, though the defendant is protected forever by its decree, and really has no interest in the disclaimer at all. While we acknowledge the difficulty and the possibility, it appears to us that so to extend the patentee's time might result in avoiding the statute altogether. The patentee may not sue again, or, if he does, the result may be the same. It does not follow, because two Circuit Courts of Appeals have held the same way, that a third will not disagree. Must the patentee disclaim at the conclusion of the second suit, or may he wait until all nine circuits have passed upon his claims? The question is at best of seasonable action, and in practice there must be some end, short of exhausting all conceivable remedies. *When the patent has once passed through all the courts then available, the statute should have its effect; else the putatively*

invalid claims may remain as scarecrows, preserved against the bare possibility that at some future time they may come to life."

This Court in *Ensten* v. *Simon Ascher & Co.*, 282 U. S. 455, 75 L. Ed. 453, said:

"The two sections (Sections 4917 and 4922 R. S.) 'are parts of one law having one general purpose, and that purpose is to obviate the inconvenience and hardship of the common law, which made a patent wholly void if any part of the invention was wrongfully claimed by the patentee, and which made such a defect in a patent an effectual bar to a suit brought upon it'. Construed together, they 'enact that where a patentee claims materially more than that which he was the first to invent, his patent is void, unless he has preserved the right to disclaim the surplus; and that he may fail to preserve the right, by unreasonable neglect or delay to enter a disclaimer in the Patent Office.' Walker on Patents, 6th ed., §254.

The statute is remedial; the intent is to aid the inventor free from wilful default or intention to mislead the public by permitting him to avoid the consequence of inadvertence, accident or mistake through prompt disavowal of the apparent right to exclude others from something improperly included in the words of his grant. *Escape is permitted only to one who acted originally in good faith and who has complied with the prescribed conditions.* 'The same principle which forbids a patentee to assert a right to more than he has actually invented compels him to disavow the right as soon as he discovers that it has been unjustly claimed. Unreasonable delay in disclaiming is thus tantamount to an original fraudulent claim, and through it the patentee loses the privilege

of making the amendment by which alone his patent could be saved."

Speaking of the time when the patentee "discovers" the invalid subject matter in his patent, this Court said:

> "In cases where the excess is not apparent at once upon the inspection of the patent by the patentee, the allowance of his claim by the Patent Office raises such a presumption in its favor that he may rely on its validity *until a court of competent jurisdiction decides that it is broader than his real invention.*"
>
> * * * * * * *
>
> "the disclaimer provisions permit him to deprive the public temporarily of complete freedom from the assertion of a monopoly apparently valid, but not so in fact. *When a competent court has declared his pretensions without sufficient foundation, we think good faith and the spirit of the enactment demand that he act with such promptness as the circumstances permit* either to vindicate his position or to relieve the public from further evil effects of his false assertion. But for the benign provisions of the statute, such an assertion would invalidate the whole patent; and these provisions were intended to protect only those who by prompt action either seek to overturn an adverse ruling or retreat from a false position."

See also:

Radio Condenser Co. v. *General Instrument Corp.*, C. C. A. 2nd, 65 Fed. (2) 458;

Bassick Manufacturing Co. v. *Adams Grease Gun Corp.*, C. C. A. 2nd, 52 Fed. (2) 36;

Better Packages Inc. v. *Nashua Package Sealing Co.*, C. C. A. 2nd, 74 Fed. (2) 682;

Otis Elevator Co. v. *Pacific Finance Corp.*, C. C. A. 9th; 68 Fed. (2) 664;
Emery v. *J. G. McCrory Co.*, D. C. E. D. N. Y., 4 Fed. Supp. 167.

In all of the above cases the obligation imposed upon the patentee by the disclaimer statute was clearly recognized as compulsory. As this Court stated in the *Ensten* case, *supra*, the disclaimer statute was the *only* escape from the invalidation of the entire patent as a consequence of the patentee claiming more than that to which he was entitled.

The opinion of the Court of Appeals below.

The Court of Appeals for the Fourth Circuit in the present case reached a different conclusion from that above expressed. It not only concluded that the statute imposed no obligation upon the patentee to disclaim subject matter which had been previously and finally invalidated, but it also stated that a patentee who denies the necessity of filing the disclaimer is not "to be held to the same rigid rule, as to prompt action" as is the patentee who does file a disclaimer pursuant to the dictate of the statute.

The logical consequence of the decision below is that a patentee who does not enter a disclaimer of invalidated claims in his patent, is in a more advantageous position than one who complies with the provisions of the statute. He is placed in a class by himself, and put in a position where he can, with immunity, assert "a monopoly apparently valid, but not so in fact."

Not only is such a conclusion opposed to the express provisions of the statute itself, but it also flatly controverts the

statement of this Court in the *Ensten* case, that but for the benign provisions of the statute, such an assertion invalidates the patent in its entirety.

The Court of Appeals for the Second Circuit addressed itself to the fallacy of such an argument. In *Better Packages v. Link*, 74 Fed. (2) 679, the Court said:

> "The plaintiff's argument that a patentee gains a better position by filing no disclaimer at all than by disclaiming late is wholly fallacious. *It is not his tardy disclaimer which forfeits the patent, but the introduction of unpatentable claims; and forfeiture for this fault is excused by a prompt disclaimer.*"

In consequence, the plaintiffs stand here before the Court deprived, by their own deliberate action, of the "benign provisions of the statute." They have deliberately and wilfully refrained from taking the step which constituted the *only escape* from the complete invalidation of their patents by reason of the undisclaimed invalidated claims therein.

The Court of Appeals below suggested that its conclusion was consistent with "the long continued practice in patent cases" (77 Fed. [2] 556, at p. 561). In support thereof the Court listed, in a footnote to its opinion, a large number of patent cases in which presumably a decree of validity was secured in a suit instituted subsequent to a final adjudication of invalidity. The list of cases, their grouping, and the facts recited with respect thereto, were copied *verbatim* from a memorandum prepared by counsel for plaintiffs at the request of the Court subsequent to the oral argument of the case. Because of the fact that, with but three exceptions, the recitation of facts with respect

to these cases is either erroneous or incomplete, we have added at the end hereof (as Appendix C, pp. 37 *et seq.*) a correct recitation of facts with respect to these cases. However, at this point it is sufficient to completely dispose of the suggestion of the Court of Appeals below, and of the cases cited in the footnote to its decision, by the following two simple statements.

1. In none of the cases cited was the effect of the disclaimer statute, as here presented, at issue or called to the attention of the Court.

2. All of the cases cited were decided prior to the decision of this Court in *Ensten* v. *Simon Ascher Co.*, *supra* (with the single exception of the case of *Radio Corp.* v. *Radio Engineering Laboratories*, 293 U. S. 1, which has no relevancy to the present issue).

Of course, complete consideration of the questions here presented involves the query of whether or not a patentee may continue the prosecution of a suit brought for infringement of a claim of his patent *prior* to a final adjudication of invalidity of that claim. In substance this query constitutes the third question certified to this Court in the case of *The Mantle Lamp Company of America* v. *Aluminum Production Company*. A determination of that question is not necessary for a disposition of the present case in view of the fact that *plaintiffs did not file the present suit until more than nine months subsequent to the final decree of invalidation of the claims they here seek to press.* However, it is submitted that the wording of the disclaimer statute is that the patentee "may maintain" a suit only on the conditions prescribed therein, as hereinbefore developed at

length. It is believed that by the use of this language the statute was designed to prevent the question of the *time of instituting* the suit from having any effect upon the applicability of its provisions, except as to recovery of costs.*

It is submitted, therefore, that the decision of the Court of Appeals below, that by not entering disclaimers of their previously invalidated claims plaintiffs preserved any enforceable right therein, is not only unsupported by the statute, but is quite contrary to the spirit, intent, and express provisions thereof, and contrary to the decision of this Court in the *Ensten* case, and should be reversed.

POINT II.

The patents are invalid because the disclaimers which were filed by the patentees did not, in fact, disclaim, but purported to rewrite the claims to which they are directed.

The disclaimers which were filed by respondents with respect to both the patents in suit admittedly disclaim

* Section 4922 provides (see Appendix B, p. 36), "But in every such case in which a judgment or decree shall be rendered for the plaintiff, no costs shall be recovered unless the proper disclaimer has been entered in the Patent Office before the commencement of the suit". In other words, if, during the pendency of a suit in one court, another court finally holds a claim to be invalid, the patentee "may maintain" the first suit on *other* claims of the patent by promptly disclaiming the invalidated claim, but, in case he then prevails he cannot recover costs because the disclaimer was not filed before instituting the suit. This is the relatively inconsequential penalty he pays for *inadvertently* asserting "a right to more than he has actually invented".

nothing. The Court of Appeals said in its opinion (Vol. I, p. 424; 77 Fed. [2] 556, 559):

> "We may assume, for the purpose of the pending case, that in effect no disclaimer has been filed as to the claims passed on in the Third Circuit, for even if the delay of 8 months is satisfactorily accounted for, the plaintiff admits, as the defendants contend and the District Judge held, that the so-called disclaimers disclaimed nothing and amounted only to an admission that the broad language of the claims should be limited to the disclosures of the specifications, in accordance with the well established rule."

An examination of the disclaimer as filed in connection with claim 9 of Patent No. 1,635,117 (Appendix, p. 28) demonstrates this. The patentee purported to disclaim:

> "Any 'filament electrodes' specified in claim 9 except such as are energized by raw alternating current; and any 'means for supplying a negative potential to the grid electrode of said electron tube from said source of alternating current' as specified in claim 9 except such means as comprise a bias determining resistance connected in a series path between the grid and filament electrodes and shunted by a condenser of low impedance to power supply frequencies."

Similarly, with respect to claim 3 of Patent No. 1,455,141 (Appendix, p. 31), the disclaimer filed by the patentees purported to disclaim:

> "Any 'source of alternating current for supply power to said amplifying means' as set forth in claim 3 except such as supplies raw alternating current to the cathode heating circuit or circuits and rectified

current to the plate circuit or circuits of such amplifying means; to any 'separate means connected to each of said amplifying and rectifying means for eliminating the hum of said alternating current' except as comprises: (a) connecting the grid of the amplifying means to the cathode thereof at a point not subjected to the influence of variations of the cathode heating current; and (b) elements connected between the 'means for amplifying said signal energy at radio frequencies' and the 'means for rectifying said energy' which prevent the passage of power supply frequencies."

With reference to claim 14 of this patent the patentees entered their disclaimer:

"To any 'means in each of circuits for eliminating the hum' as set forth in claim 14, except as comprises: (a) connecting the grids of vacuum tubes to the cathodes thereof at a point not subjected to the influence of variations of the cathode heating current, and (b) interconnecting the plurality of vacuum tubes which amplify the signal energy at radio frequencies through elements which prevent the passage of power supply frequencies."

Thus, the patentees, by their disclaimers, have attempted to rewrite the claims without affording the Patent Office an opportunity to pass on the novelty thereof as rewritten.

This Court, in *Altoona Publix Theatres* v. *American Tri-Ergon,* 294 U. S. 477, held this type of disclaimer invalid as unwarranted by the disclaimer statute. Moreover, the original claims, as to which the invalid disclaimer was filed,

were likewise held to be invalid because thereof. This Court said (at p. 491):

> "With the invalid disclaimer must fall the original claims as they stood before the disclaimer. The disclaimer is a representation, as open as the patent itself, on which the public is entitled to rely, that the original claim is one which the patentee does not in the language of the statute 'chose to claim or hold by virtue of the patent.' Upon the filing of disclaimers the original claims were withdrawn from the protection of the patent laws, and the public was entitled to manufacture and use the device originally claimed as freely as though it had been abandoned. To permit the abandoned claim to be revived, with the presumption of validity, because the patentee had made an improper use of the disclaimer, would be an inadmissible abuse of the patent law to the detriment of the public."

It will be noted that in the present case claims 9, 11 and 12 of Patent No. 1,637,117 are involved in the suit, and that the invalid disclaimer was filed with respect to each thereof. Similarly, claims 1 to 4, 13 and 14 of Patent No. 1,455,141 are involved in the present suit, and the invalid disclaimer was filed with respect to each thereof.

It follows, therefore, that each of the claims of the patents in suit in the present case are invalid because of the invalid disclaimers that were filed by the patentees with respect thereto, and that, in consequence, the District Court committed no error in dismissing the bill of complaint by reason thereof.

In consequence, the decision of the Court of Appeals for the Fourth Circuit was in error and should be reversed.

POINT III.

The patents are invalid because the patentees unreasonably neglected or delayed to enter a disclaimer of the invalidated claims subsequent to final adjudication of invalidity thereof.

The patentees in the present case filed their disclaimers eight months and thirteen days after this Court had declined to review the decisions of the Court of Appeals for the Third Circuit which invalidated the designated claims of the two patents.

The question, thus presented, is whether or not that period of time constituted an "unreasonable" delay.

The statute itself does not provide any guide by which it may be determined what does or does not constitute "unreasonable" delay. Likewise, we find no decision of this Court which expressly fixes a period of delay which may be designated as "reasonable," any excess of which would be "unreasonable."

In the *Ensten* case, *supra,* this Court definitely fixed the time when the period of delay begins. It said:

> "Delay begins whenever the patentee becomes aware that he has claimed more than he has invented or described. In cases where the excess is not apparent at once, upon the inspection of the patent by the patentee, the allowance of his claim by the Patent Office raises such a presumption in its favor that he may rely on its validity *until a Court of competent jurisdiction decides that it is broader than his real invention.*"

This Court further said:

> "When a competent court has declared his pretensions without sufficient foundation, we think good faith and the spirit of the enactment demand that he act with such promptness as the circumstances permit either to vindicate his position or to relieve the public of further evil effects of his false assertion."

Although this Court did not fix the time, the inference is that in affirming the decree of the Court of Appeals for the Second Circuit, this Court approved the rule stated in the decision of the Court of Appeals that, except under exceptional circumstances, a delay of more than thirty days after the finality of decision of invalidity is "unreasonable" under the statute.

The Court of Appeals for the Second Circuit in the earlier case of *R. Hoe & Co.* v. *Goss Printing Press Co.*, C. C. A. 2nd, 31 Fed. (2) 565, said (at p. 566):

> "The mandate will therefore be recalled and amended, so as to require the plaintiff to file a disclaimer within thirty days after the time expires within which to petition for certiorari, or, if it does so petition, then within thirty days after denial, if it is denied, or affirmance of the decree, if it is granted, and the decree is affirmed."

In the *Ensten* case (38 Fed. [2] 71) the Court of Appeals referred to its prior decision in *Hoe* v. *Goss*, and stated that in that case:

> "we required the plaintiff either to petition for certiorari, or file a disclaimer within thirty days after expiration of the time for such a petition. The logic of that decision is equally applicable to an inter-

> locutory decree of the District Court. * * *. Adherence to the Hoe case requires an affirmance of the decree below."

In *Bassick Manufacturing Co.* v. *Adams Grease Gun Corp.*, 39 Fed. (2) 904, District Judge THATCHER cited the "thirty day" rule, but refused to dismiss the bill of complaint before him because—"plaintiff at bar did not wait so long". The Court of Appeals for the Second Circuit, on the appeal from Judge THATCHER's ruling, affirmed for that reason (52 Fed. [2] 36).

In *Better Packages* v. *Link*, 74 Fed. (2) 679, the Court of Appeals for the Second Circuit said (p. 680):

> "In the absence of special circumstances, such as existed in Minerals Separation vs. Butte, etc., Mining Co., 250 U. S. 336, 354, 39 S. Ct. 496, 63 L. Ed. 1019, thirty days after expiration of time for appeal would seem ample time within which to prepare and file the document required by law to avoid forfeiture of the patent."

See also:

Emery v. *J. G. McCrory*, 4 Fed. Supp. 167.

The Court of Appeals for the Sixth Circuit has likewise adopted the "thirty day" rule.

Herman v. *Youngstown Car Manufacturing Co.*, 191 Fed. 579, 587, 588;

Higgin Manufacturing Co. v. *Watson*, 263 Fed. 378, 387;

Excelsior v. *Williamson Heater Co.*, 269 Fed. 614, 619.

Likewise, the Court of Appeals for the Ninth Circuit in *Otis Elevator Co.* v. *Pacific Finance Corp.*, 68 Fed. (2) 664, by citing with approval the decision of the Court of Appeals for the Second Circuit in *Bassick* v. *Adams*, 39 Fed. (2) 904, has indicated approval of the rule.

Also, the District Court for the District of Maryland in *General Chemical Co.* v. *Standard Wholesale Phosphate & Acid Works, Inc.*, 8 Fed. Supp. 265, carefully reviewed the authorities, and upon sound logical reasoning, fully set forth in its opinion, approved and adopted the "thirty day" rule of the Second Circuit. The Fourth Circuit Court of Appeals, following the same fallacious theory which prompted its decision in the case at bar, reversed the District Court in the *General Chemical* case (77 Fed. [2] 230).

On the foregoing, it is here contended that an allowance of thirty days, after finality of invalidation, is ample, except in extraordinary circumstances, for the filing of a disclaimer of finally invalidated claims, and is in keeping with the spirit and intent of the statute, as construed by this Court, of requiring exceptionally prompt action on the part of the patentee to free the public from the assertion of an invalid monopoly.

The fact that the statute requires rigid promptness of an extraordinary character has recently been recognized by the Court of Appeals for the Tenth Circuit in *Railway Engineering E. Co.* v. *Oregon Short Line R. Co.*, 79 Fed. (2) 469, where the dilatory entry of a decree fifty-one days after the decision of invalidity, and the dilatory appeal therefrom eighty-nine days after the entry of the decree, were found by the majority of the Court to constitute "unreasonable" delay under the statute.

If this Court adopts the "thirty day" rule, and holds, as we submit it should hold, that any delay beyond thirty days after finality of adjudication of invalidity is "unreasonable", except under exceptional circumstances,* then it follows that the patentees' delay of eight months and thirteen days in entering disclaimers in the two patents involved in the present suit was "unreasonable", and that, in consequence, both patents are wholly invalid for that reason.

If, on the other hand, this Court is not inclined to adopt the "thirty day" rule, petitioners insist that in the instant case the delay of eight months and thirteen days, in any event, was "unreasonable". The patentees in the present case advance no extenuating circumstance of the character accepted by this Court in *Minerals Separation* v. *Butte, supra,* and, in addition, delayed a period nearly three times the duration of the delay in that case. The patentees here were not foreign inventors, and the country was not at war. Under such circumstances no conceivable justification could exist for a delay of that period in entering the disclaimer.

It is submitted, therefore, that the conclusion is inescapable that the delay in entering the disclaimer in the present case was "unreasonable" under the statute, and that both patents in suit are wholly invalid for that reason.

---

* Such "exceptional circumstances" existed in *Minerals Separation* v. *Butte,* 250 U. S. 336. In that case the patentee was in Europe, and there was an interference with communications with Europe due to the war. For that reason this Court excused a delay of three months in entering the disclaimer, but plainly indicated that it considered three months entirely too long under ordinary conditions.

Conclusion.

It is submitted that the judgment of the Court below should be reversed, and the decree of the Trial Court dismissing the bill of complaint as to the two patents in suit should be sustained.

Respectfully submitted,

SAMUEL E. DARBY, JR.,
Counsel for Petitioners.

COOK & MARKELL,
Attorneys for Petitioners.

CHARLES MARKELL,
of Counsel.

APPENDIX A.

Disclaimer.

1,635,117.—*Francis W. Dunmore,* Washington, D. C. SIGNAL-RECEIVING SYSTEM. Patent dated July 5, 1927. Disclaimer filed July 8, 1933, by the patentee and the exclusive licensee, *Dubilier Condenser Corporation.*

Hereby enter their disclaimer to:

(1) Any "source of alternating current power supply" in claim 1 except such as delivers rectified alternating current to said grid electrodes and raw alternating current to said filament electrodes; to any "means associated with said alternating current power supply for impressing a negative potential on said grid electrodes" in said claim 1, except such means as comprise a resistance in series with said grid electrodes shunted by a condenser; to any "means for energizing said filaments" as specified in claims 2, 3, 4, 5, and 6, except such means as supply raw alternating current to said filaments and to any "rectifier adapted to supply a negative potential to said grid electrodes" as specified in claims 2, 4, 5, and 6 except such as supply such negative grid biasing potential by means of a bias determining resistance in series with the grid electrodes and connected to the respective cathodes of the amplifying tubes and shunted by a condenser of low impedance to power supply frequencies.

(2) Any "filament electrodes" specified in claim 9 except such as are energized by raw alternating current; and any

"means for supplying a negative potential to the grid electrode of said electron tube from said source of alternating current" as specified in claim 9 except such means as comprise a bias determining resistance connected in a series path between the grid and filament electrodes and shunted by a condenser of low impedance to power supply frequencies.

(3) Any "source of power adapted to be energized by alternating current or the like" as specified in claim 11, except such as supplies raw alternating current to the cathode heating circuits of such tubes and rectified current to the grid circuits of such tubes; and to any "output terminals connected at opposite terminals of said resistance" as specified in said claim, except such as are also connected to the grid and cathode of the vacuum tube.

(4) Any "method of energizing thermionic vacuum tubes or the like from a source of alternating current" as specified in claim 12, except such as supplies raw alternating current to the cathode heating circuit of such tubes and rectified current to the grid circuit of such tubes; and to "impressing the desired portion of such voltage drop upon said thermionic tube" except to impressing the desired portion of the voltage drop upon the grid-cathode circuit of said thermionic tube.

[*Official Gazette August 1, 1933.*]

Disclaimer.

1,455,141.—*Percival D. Lowell* and *Francis W. Dunmore*, Washington, D. C. RADIO RECEIVING APPARATUS. Patent dated May 15, 1923. Disclaimer filed July 8, 1933, by the patentees and the exclusive licensee, *Dubilier Condenser Corporation.*

Therefore enter their disclaimer as follows:

(1) To any "source of alternating current for supplying power to said amplifying means" as set forth in claim 1 except such as supplies raw alternating current to the cathode heating circuit or circuits of such amplifying means and rectified current to the plate circuit or circuits of such amplifying means; to any "plurality of means in circuit with said amplifying means for eliminating the hum of said alternating current in said apparatus" except such means as comprises: (*a*) a connection from the grid to the amplifying means to the cathode thereof at a point not subjected to the influence of variations of the cathode heating current; (*b*) elements connected between the stages of said amplifying means which prevent the passage of power supply frequencies; and (*c*) a resistor shunted by a condenser interposed in the circuit between the grid and cathode of the amplifying means where said condenser forms a low impedance path for both signal and power supply frequencies and wherein the voltage drop across said resistor provides a negative bias for the grid of the amplifying means.

(2) To any "source of alternating current for supplying power to said amplifying means" as set forth in claim 2

except such as supplies raw alternating current to the cathode heating circuit or circuits and rectified current to the plate circuit or circuits; to any "means connected to said amplifying and rectifying means for eliminating the hum of said alternating current in said apparatus" except as comprises: (*a*) a connection from the grid of the amplifying means to the cathode thereof at a point not subjected to the influence of variations of cathode heating current; (*b*) elements connected between the stages of said amplifying means and between said amplifying and rectifying means which prevent the passage of power supply frequencies; and (*c*) a resistor shunted by a condenser interposed between the grid and the cathode of the amplifying means, where said condenser forms a low impedance path for both signal and power supply frequencies and wherein the voltage drop across said resistor provides a negative bias for the grid of the amplifying means.

(3) To any "source of alternating current for supplying power to said amplifying means" as set forth in claim 3 except such as supplies raw alternating current to the cathode heating circuit or circuits and rectified current to the plate circuit or circuits of such amplifying means; to any "separate means connected to each of said amplifying and rectifying means for eliminating the hum of said alternating current" except as comprises: (*a*) connecting the grid of the amplifying means to the cathode thereof at a point not subjected to the influence of variations of the cathode heating current, and (*b*) elements connected between the "means for amplifying said signal energy at radio frequencies" and the "means for rectifying said energy" which prevent the passage of power supply frequencies.

(4) To any "source of alternating current for supplying power to said amplifying means" as set forth in claim 4 except such as supplies raw alternating current to the cathode heating circuit or circuits of such amplifying means and rectified current to the plate circuit or circuits of such amplifying means; to any "means connected to each of said amplifying, rectifying, and reproducing means for eliminating the hum of the alternating current" except such as comprises: (*a*) connecting the grid of the amplifying means to the cathode thereof at a point not subjected to the influence of variations of the cathode heating current, and (*b*) elements connected between stages of the amplifying means and between the amplifying means and the rectifying means which prevent the passage of power supply frequencies.

(7) To any "means in different parts of said circuits for eliminating the hum of the alternating current" as set forth in claim 7 except such as comprises: (*a*) connecting the grids of said amplifying means to the cathodes thereof at a point not subjected to the influence of variations of the cathode heating current; (*b*) elements interconnecting the stages of the "means for amplifying said energy at radio frequencies" and elements interconnecting the "means for amplifying said energy at radio frequencies" with the "means for rectifying said energy" which prevent the passage of alternating current hum; and (*c*) such means as a resistor shunted by a condenser connected in a circuit between the grid and cathode of the "means for amplifying said energy at radio frequencies" where the said condenser forms a low impedance path for both signal and power supply frequencies.

(13) To any "means for supplying the rectified energy to circuits of said vacuum tube amplifiers" as set forth in claim 13, except such as supplies such rectified energy to the plate circuits of said vacuum tube amplifiers and also supplies raw alternating current to the cathode heating circuit or circuits of said amplifiers; to any "means connected in each of the circuits of said amplifiers, detector and reproducer for eliminating the hum of said alternating current" except such as comprises: (*a*) connecting the grids of the amplifiers to the cathodes thereof at a point not subjected to the influence of variations of the cathode heating current; (*b*) elements interconnecting the stages of said radio frequency vacuum tube amplifier and interconnecting the output of said radio frequency vacuum tube amplifier with the detector which prevent the passage of power supply frequencies; and (*c*) a resistor shunted by a condenser and connected in the circuit between the grid and cathode of each of said amplifiers, where the said condenser forms a low impedance path for both signal and power supply frequencies.

(14) To any "means in each of said circuits for eliminating the hum" as set forth in claim 14, except as comprises: (*a*) connecting the grids of vacuum tubes to the cathodes thereof at a point not subjected to the influence of variations of the cathode heating current, and (*b*) interconnecting the plurality of vacuum tubes which amplify the signal at radio frequencies through elements which prevent the passage of power supply frequencies.

(15) To any "vacuum tubes" as set forth in claim 15 except vacuum tubes which have the grid electrodes thereof connected with the cathodes thereof at a point not subjected to the influence of variations of the cathode heating current;

and to any "circuits interconnecting said electrodes and said detector" as specified in said claim except such circuits as include an inductively coupled radio frequency transformer.

(16) To any "source of alternating current for supplying power to said amplifying means" as set forth in claim 16 except such as supplies raw alternating current to the cathode heating circuit or circuits and rectified current to the plate circuit or circuits; to any "means connected in circuit with said rectifying means for smoothing out the rectified current and supplying power to said amplifying means" except such as prevents distortion of the signal current.

(18) To any "source of alternating current for supplying power to said circuits" as set forth in claim 18 except such as supplies raw alternating current to the cathode heating circuit and rectified current to the plate circuit or circuits of the vacuum tubes; to any "means connected in circuit with said grid and plate electrodes for eliminating the hum" except as compromises: (*a*) connecting the grids of the vacuum tubes to the cathode thereof at a point not subjected to the influence of variations of the cathode heating current, and (*b*) interposing filter elements in the plate circuit to reduce fluctuation in power supply frequencies; and to any "circuits interconnecting said electrodes" except as include a radio frequency transformer.

(19) To any "source of alternating current" as set forth in claim 19 except as supplies raw alternating current to the cathode heating circuit or circuits of said vacuum tubes; and to any "circuits interconnecting said electrodes"

except as include elements which prevent the passage of power supply frequencies.

(20) To any "source of alternating current for supplying power to said amplifying means" as set forth in claim 20 except as supplies raw alternating current to the cathode heating circuit or circuits of said amplifying means and rectified current to the plate circuit or circuits of said amplifying means.

(21) To any "source of alternating current for supplying power to said tubes" as set forth in claim 21 except as supplies raw alternating current to the cathode heating circuit or circuits and rectified current to the plate circuit or circuits of said tubes.

[*Official Gazette August 1, 1933.*]

APPENDIX B.

SEC. 4917. Whenever, through inadvertence, accident, or mistake, and without any fraudulent or deceptive intention, a patentee has claimed more than that of which he was the original or first inventor or discoverer, his patent shall be valid for all that part which is truly and justly his own, provided the same is a material or substantial part of the thing patented; and any such patentee, his heirs or assigns, whether of the whole or any sectional interest therein, may, on payment of the fee required by law, make disclaimer of such parts of the thing patented as he shall not choose to claim or to hold by virtue of the patent or assignment, stating therein the extent of his interest in such patent. Such

disclaimer shall be in writing, attested by one or more witnesses, and recorded in the Patent Office; and it shall thereafter be considered as part of the original specification to the extent of the interest possessed by the claimant and by those claiming under him after the record thereof. But no such disclaimer shall affect any action pending at the time of its being filed, except so far as may relate to the question of unreasonable neglect or delay in filing it.

SEC. 4922. Whenever, through inadvertence, accident, or mistake, and without any willful default, or intent to defraud or mislead the public, a patentee has, in his specification, claimed to be the original and first inventor or discoverer of any material or substantial part of the thing patented, of which he was not the original and first inventor or discoverer, every such patentee, his executors, administrators, and assigns, whether of the whole or any sectional interest in the patent, may maintain a suit at law or in equity, for the infringement of any part thereof, which was bona fide his own, if it is a material and substantial part of the thing patented, and definitely distinguishable from the parts claimed without right, notwithstanding the specifications may embrace more than that of which the patentee was the first inventor or discoverer. But in every such case in which a judgment or decree shall be rendered for the plaintiff, no costs shall be recovered unless the proper disclaimer has been entered at the Patent Office before the commencement of the suit. But no patentee shall be entitled to the benefits of this section if he has unreasonably neglected or delayed to enter a disclaimer.

APPENDIX C.

The cases cited by the Court of Appeals for the Fourth Circuit in the footnote to its decision, and referred to as establishing "long continued practice in patent cases inconsistent" with petitioner's contentions here made.

As stated in our brief (*supra*, p. 16), the Court of Appeals below copied, *verbatim*, from the memorandum of plaintiff's counsel, as a footnote to its opinion, a list of cases and recitations of facts relative thereto grouped under several headings. The cases thus grouped and described purported to be those in which an adjudication of validity was secured in an action instituted subsequent to an adjudication of invalidity. As stated in our brief, the descriptions of these cases, with the exception of three, are erroneous or so incomplete as to raise an erroneous inference. Each case has been run down in each of the courts, and the correct and complete facts show the following:

Cases in the Supreme Court prior to the establishment of the Circuit Courts of Appeals (prior to the Act of 1891).

We are not here concerned with the practice prevailing prior to the Act of 1891, or prior to the enactment of the Revised Statutes. Under the present statutes a situation such as was presented in the *Barbed Wire* case could not possibly exist. In that case the original patent was held to be invalid, and was reissued. The reissue patent was then held to be invalid. Thereafter, the original patent was held to be valid. Obviously this procedure, permissible then but not now, is no guide to "long continued practice".

Cases in the Supreme Court where the patent was held invalid by the Circuit Court of Appeals for one Circuit and later held valid by the Circuit Court of Appeals for another Circuit.

1. *Expanded Metal Co.* v. *Bradford*, 214 U. S. 366.

The footnote of the Court of Appeals says as to this case:

> "After the decree in the Circuit Court of Appeals for the Third Circuit (invalidating the patent) plaintiff filed a bill against another defendant in the Northern District of Ohio."

The fact is just contrary to the statement. The decree of the Third Circuit was on September 10, 1906, and the bill in the Ohio Court was filed on February 10, 1904.

2. *Diamond Rubber Co.* v. *Consolidated Rubber Tire Co.*, 220 U. S. 428.

The first decision on this patent, rendered by the District Court in the Southern District of New York (91 Fed. 978), held the patent to be valid. No appeal was ever taken from that decision, so that throughout all subsequent litigation there was an outstanding opinion of validity for the patent. Thus the decision of invalidity of the Court of Appeals for the Sixth Circuit was in conflict with a prior decision of validity. The Court of Appeals for the Second Circuit, in a subsequent suit, adhered to the prior adjudication of validity, and because of the diversity of opinion between the Second and Sixth Circuits thus resulting, this Court reviewed the case and found the patent to be valid.

The correct recitation of facts as to this case, therefore, negatives the thought that the first adjudication received by the patent was one of invalidity.

3. *Dowagiac Manufacturing Co.* v. *Minnesota Moline Plow Co.*, 235 U. S. 641.

The description of this case contained in the footnote to the decision of the Court of Appeals below shows that it did not involve the issue of validity. In consequence it is not pertinent to the present inquiry.

4. *Hanover Star Milling Co.* v. *Metcalf*, 240 U. S. 403.

This was a trade-mark case and has no applicability to the present question, or to the disclaimer statute.

5. *Railroad Supply Co.* v. *Elryia Iron & Steel Co.*, 244 U. S. 285.

The recitation of the facts of this case in the footnote to the opinion of the Court of Appeals below shows that the cases were "copending".

6. *Abercrombie & Fitch* v. *Baldwin*, 245 U. S. 198.

The facts in this case were entirely different from those as set forth in the footnote. The first adjudication the patents received was in an unreported case in the Southern District of Illinois in which both patents involved in the suit were held to be valid. The Court of Appeals for the Seventh Circuit next passed on the patents on appeal, and held both patents valid (199 Fed. 133) (the footnote of the Court of Appeals below incorrectly states that the Court of Appeals for the Seventh Circuit held the patents to be invalid). Thereafter one of the patents was reissued and held to be valid by the District Court for the Western Division

of Pennsylvania, 215 Fed. 735. The Circuit Court of Appeals for the Third Circuit held the patent to be invalid (219 Fed. 735). Its decision was rendered on January 22, 1915, and on February 6, 1915, in a copending case awaiting decision after trial, the District Court for the Southern District of New York held the patent to be valid (227 Fed. 455), which decision was affirmed by the Court of Appeals for the Second Circuit (228 Fed. 895).

From the foregoing recitation of facts it is apparent that the first, second and third adjudications the patent received were of validity. Diversity of opinion therefore occurred in a copending case, which resulted in this Court reviewing the dispute. In consequence this case completely fails to support the suggestion of the Court below, but rather completely supports the contentions herein made by petitioners.

7. *T. H. Symington* v. *National Malleable Castings Co.*, 250 U. S. 383.

The recitation of the facts in this case is highly misleading due to the incompleteness thereof. The chronology of the litigation was as follows. On August 6, 1914, the District Court for the Northern District of Illinois, Eastern Division, held the Emerick Patent No. 693,643 valid and infringed (216 Fed. 198). On October 5, 1915, the Court of Appeals for the Seventh Circuit affirmed (229 Fed. 730). On April 8, 1915, the District Court of Maine held Byers Patent No. 673,419 not infringed and did not pass on validity (222 Fed. 517). On February 3, 1916, the Court of Appeals for the First Circuit held the Byers patent valid and

infringed (230 Fed. 821). On rehearing the Court of Appeals affirmed its previous decision on June 8, 1916 (234 Fed. 343). This Court granted writs of certiorari to both Circuits because the inventions were substantially the same, and affirmed the Court of Appeals for the First Circuit, and reversed the Court of Appeals for the Seventh Circuit (250 U. S. 383). Thus, there was no issue in this case comparable to that here presented. Two entirely different patents issued to different inventors were involved and both of them were held to be valid by the lower Courts.

8. *Meccano Limited* v. *John Wanamaker*, 253 U. S. 136.

The description of this case in the footnote shows that there was a case pending at the time the decision of invalidity was received, and it was the prosecution of that case that resulted in an adjudication of validity.

9. *New York Scaffolding Co.* v. *Chain Belt Co.*, 254 U. S. 32.

Here again the facts have been misstated. The Court of Appeals for the Eighth Circuit did not, as stated in the footnote, hold the patent to be invalid in *New York Scaffolding Co.* v. *Whitney*, 224 Fed, 452. On the contrary, the patent was declared to be valid. In consequence this case does not support the suggestion of the Court below.

10. *John E. Thropp's Son's Co.* v. *Seiberling*, 264 U. S. 320.

This case has no bearing on the present inquiry because disclaimers were actually filed with reference to the claims which had been held to be invalid, as noted in the footnote of the Court of Appeals below.

11. *Corona Cord Tire Co.* v. *Dovan Chemical Corp.*, 276 U. S. 358.

This is the only case thus far recited which supports the suggestion of the Court of Appeals below. Obviously this case alone does not establish "long continued practice." Moreover, the existence or applicability of the disclaimer statute was not raised, and in any event, this Court, which reviewed the case because of diversity of opinion between the Court of Appeals for the Second and Third Circuits, held the patent to be invalid.

12. *Saranac Automatic Machine Corp.* v. *Wirebound Patents Co.*, 282 U. S. 704.

The correct facts of this case are that the Court of Appeals for the Seventh Circuit held the patent to be invalid on February 6, 1928 (25 Fed. [2] 363). The opinion of the Court of Appeals for the Sixth Circuit, which held the patent to be valid, was in a suit which had been instituted in the District Court before the invalidating opinion of the Court of Appeals for the Seventh Circuit. Thus the District Court's decision, 24 Fed. [2] 872 which was reviewed by the Court of Appeals for the Sixth Circuit (37 Fed. [2] 830), was rendered on July 9, 1927, nearly a year before the invalidating decision of the Court of Appeals for the Seventh Circuit. Thus, here again, and contrary to the inference to be derived from the recitation of this case in the footnote to the opinion of the Court of Appeals below, the first adjudication was not one of invalidity, and the patentee was diligently endeavoring to vindicate his position in copending litigation instituted and submitted prior to the decree of invalidity.

13. *Radio Corp.* v. *Radio Engineering Laboratories*, 293 U. S. 1.

This case has nothing whatever to do with the question here before the Court. The issue was priority of invention. This Court held that DeForest was the prior inventor of the subject matter of his patents. Subsequently the Court of Appeals for the Second Circuit concluded otherwise—an error which this Court later corrected (78 L. Ed. 1453).

Cases in Circuit Courts of Appeals where the patent was first held to be invalid by one Circuit Court of Appeals and later held to be valid by another Circuit Court of Appeals (omitting cases which reached the Supreme Court).

1. *Maitland* v. *B. Goetz Manufacturing Co.*, 86 Fed. 124.

This case has no bearing whatever on the present inquiry because of the fact, as recited in the footnote of the Court of Appeals below, that after the decree of invalidity the patent was reissued by narrowing the claim which had been held to be invalid, and the reissue claim was subsequently held to be valid. This was proper procedure, and had nothing whatever to do with disclaimer as this Court pointed out in *Altoona Publix Theatres* v. *American Tri-Ergon*, 294 U. S. 477.

2. *McNeely* v. *Williames*, 96 Fed. 978.

Here, again, the description of this case misstates the facts. The Court in the Southern District of New York on February 12, 1890, held claims 1 and 3 valid and some of the remaining claims (Nos. 2, 5 and 7) invalid (41 Fed. 358). The Court said that on the filing of disclaimer of the invalid

claims the decree would be entered. In the Eastern District of Pennsylvania the Court on December 4, 1894, also held claims 1 and 3 valid (64 Fed. 766). As the opinion of the Court in that case pointed out, the defendant argued that the patent was void for failure to file disclaimers after the previous case. *The Court said that the time for taking the appeal had not yet expired,* and therefore the patentee could either disclaim or appeal from the decision in the New York case. The Court of Appeals for the Third Circuit then held claims 1 and 3 valid, and also held the remaining claims (2, 5, and 7) valid, though they were not involved in the suit. Therefore, it is obvious that the Court of Appeals for the Third Circuit recognized the necessity of filing the disclaimer or of appealing, and found validity for the claims during a period within which an appeal could be taken.

3. *Westinghouse Electric & Manufacturing Co.* v. *Stanley Instrument Co.*, 133 Fed. 167.

Here, again, the recitation of the case in the footnote to the opinion of the Court of Appeals is erroneous. Chronologically, the facts are as follows:

On May 17, 1899, the Court in the Southern District of New York held that Patent No. 511,559 was not void on its face on demurrer (94 Fed. 868). On September 27, 1899, the Court in the Eastern District of Pennsylvania held that patent, together with Patent No. 511,560, valid and infringed (97 Fed. 588). On February 6, 1901, the Court for the Southern District of Ohio, Western Division, held both patents valid and infringed (106 Fed. 274). On August 22, 1901, the District Court for the Southern District of New

York held both patents valid and infringed (110 Fed. 377). On November 5, 1902, the Court of Appeals for the Sixth Circuit held both patents to be valid and infringed (118 Fed. 562). On February 25, 1903, the Court of Appeals for the Second Circuit held the patents to be invalid (121 Fed. 831).

From the foregoing it will be seen that the patents had received four adjudications of validity before the decision of invalidity. This case, therefore, does not, in the slightest sense, support the suggestion of the Court of Appeals below.

4. *Thompson-Houston Electric Co.* v. *Black River Traction Co.*, 135 Fed. 759.

This is another case where the patent was held to be invalid and then reissued to cure the invalidity. The footnote of the opinion of the Court of Appeals below states with reference to this case:

> "It was held that the reissued claim was not for different inventions and that the claim was valid."

The opinion of the Court is directly to the contrary. The Court held that it was for different inventions (see 135 Fed. 759). Obviously, this case has no applicability to the present question, and affords no support for the suggestion of the Court below.

5. *Imperial Bottle Cap and Machine Co.* v. *Crown Cork & Seal Co.*, 139 Fed. 312.

As appears from the recitation of the facts of this case in the footnote, two cases were pending decision at the same time, by two different Circuit Courts of Appeals. Quite obviously, therefore, the patentee was diligently en-

deavoring to vindicate his assertion of validity for his patent. In consequence, this case does not support the suggestion of the Court of Appeals below.

6. *Pieper v. S. S. White Dental Manufacturing Co.*, 228 Fed. 30.

This is the second case referred to which apparently supports the suggestion of the Court of Appeals below. However, the existence and effect of the disclaimer statute was not at issue or called to the attention of the Court, and the decision in the case was rendered prior to the decision of this Court in the *Ensten* case.

7. *Backstay Machine & Leather Co.* v. *Hamilton*, 262 Fed. 411.

This is the third case referred to which apparently supports the suggestion of the Court of Appeals below. Here again, however, the existence or applicability of the disclaimer statute was not in issue or called to the attention of the Court, and the decision was rendered prior to the decision of this Court in the *Ensten* case.

8. *Wenborne-Karpen Dryer Co.* v. *Cutler Dry Kiln Co.*, 290 Fed. 625.

In this case the decree of invalidity was rendered while a suit on the same patent was pending and being actively prosecuted in another Court. In consequence, the case does not support the suggestion of the Court of Appeals below.

9. *Franc-Strohmenger & Cowan* v. *Arthur Siegman*, 27 Fed. (2) 785.

In this case the Court of Appeals for the Sixth Circuit held the patent invalid on July 8, 1927 (27 Fed. [2] 553). On February 21, 1928, the District Court for the Southern District of New York held the patent to be valid (25 Fed. [2] 108) in a suit where the bill had been filed prior to the decision of the Court of Appeals for the Sixth Circuit.

Summary.

From the foregoing it will be seen that of the long list of cases cited in the footnote of its opinion by the Court of Appeals below there are only three cases which support its suggestion that

> "the long continued practice in patent cases is inconsistent with defendant's contention that an adverse decision on any claim of the patent requires the prompt filing of a disclaimer thereof with the result that it may never be litigated again".

As to those three cases, the existence or applicability of the disclaimer statute was not at issue, or called to the attention of the Court, and they were all decided before this Court's decision in the *Ensten* case.

FILE COPY

FILED
FEB 14 1936

Supreme Court of the United States

October Term, 1935

No. 388

A. G. TRIPLETT, R. M. TRIPLETT,
C. M. TRIPLETT, JR., and
THE BALTIMORE GASLIGHT COMPANY,
Defendants-Petitioners,

vs.

PERCIVAL D. LOWELL, FRANCIS W. DUNMORE
and DUBILIER CONDENSER CORPORATION,
Plaintiffs-Respondents.

REPLY BRIEF FOR PETITIONERS.

SAMUEL E. DARBY, JR.,
Counsel for Petitioners.

COOK & MARKELL,
Attorneys for Petitioners.

CHARLES MARKELL,
Of Counsel.

Supreme Court of the United States

October Term, 1935

No. 388

A. G. TRIPLETT, R. M. TRIPLETT,
C. M. TRIPLETT, JR., and
THE BALTIMORE GASLIGHT COMPANY,
Defendants-Petitioners,

vs.

PERCIVAL D. LOWELL, FRANCIS W. DUNMORE
and DUBILIER CONDENSER CORPORATION,
Plaintiffs-Respondents.

REPLY BRIEF FOR PETITIONERS.

I.

We believe that no useful purpose can be served by respondents' attempt to convey the idea that there is any difference, except in scope, between the question presented in the present case and the first question certified to this Court by the Court of Appeals for the Seventh Circuit in the case of *The Mantle Lamp Company of America* v. *Aluminum Products Company* (No. 590). The simple fact is that the first question presented in the *Mantle Lamp* case is whether or not a patentee, after finality of adjudication of invalidity of one or more claims of his patent by a court in one circuit, may maintain a second suit afterward brought

on the same and other claims of the patent, *in the same circuit*, where the patentee has not only failed but has refused to file a disclaimer of the invalidated claims in accordance with the provisions of Section 4922 of the Revised Statute.

The simple but broader question presented in the present case is whether or not the patentee, under such circumstances, can maintain a second suit *anywhere* in the judicial system.

The answer to these questions can and must be found in the provisions of the disclaimer statute—a subject which respondents' brief adroitly avoids and most obviously ignores.

Respondents advance no criticism of the analysis and plain meaning of the language of the statute as given in the main brief for petitioners beginning at page 9. This fact, alone, lends support to the assertion there made and here repeated that the language of the statute is clear, and its meaning capable of but one interpretation, viz.: that when one or more claims of a patent have been finally adjudged to be invalid, the patent in its entirety is thereafter invalid unless the invalidated claims are disclaimed without unreasonable delay. Moreover, this Court has clearly pointed out (in *Ensten* v. *Simon Ascher*, 282 U. S. 455; 75 L. Ed. 453) that it is only through "the benign provisions of the statute", if availed of, that the result of complete invalidity for the patent, by reason of such final adjudication, can be avoided.

Obviously, the filing of a disclaimer of the invalidated claims precludes the thought of maintaining a subsequent suit on the invalidated claims; and failure to disclaim the invalidated claims likewise precludes the thought of maintaining a subsequent suit on other claims of the patent which have thus lost any vestige of validity that they might have had if the disclaimer had been filed.

In their brief, respondents do not attempt to answer these simple propositions, for, obviously, there is no answer thereto which can bear analysis in the light of the clear intent and plain language of the statute.

II.

Respondents argue, under the inapplicable doctrine of *Mast, Foos & Co.* v. *Stover Manufacturing Co.*, 177 U. S. 485, that by virtue of the Act of 1891, which created the Circuit Courts of Appeals, the decision of one Circuit Court of Appeals has only the weight of comity in the Court of Appeals of another circuit, and, in consequence, only that doctrine should apply in a second suit brought for alleged infringement of claims finally adjudged to be invalid in a previous suit in a different circuit.

The complete answer to respondents' contention in this respect is found in the disclaimer statute itself, which again emphasizes the significance of respondents' efforts to completely ignore and avoid discussion of the precise wording and provisions thereof in their brief. Whatever may be the rule of effect on one Circuit Court of Appeals by a decision in another in ordinary cases, the disclaimer statute, by its express provisions, establishes a rule which is as fundamentally controlling as is the section of the statute which created the patent grant. Only in accordance with the permissive provisions of the statute which created it, and to the extent and in the manner permitted therein, may a patent monopoly be enforced. The disclaimer section of that statute expressly limits its permission to maintain a suit on a patent with invalid claims therein to claims which have not theretofore been invalidated, and then, only if the invalidated claims have been disclaimed. No other possible interpretation of the language of the statute has been ad-

vanced by respondents, and it is believed that no other interpretation is possible.

Moreover, it cannot be presumed that it was the intent or purpose, in creating the Circuit Courts of Appeals, to afford a patentee more opportunities to litigate a claim theretofore finally adjudged to be invalid than he had prior to the Act which created those courts. Prior to the Act of 1891 a patentee was confined to a single litigation if invalidity was found. A suit instituted in one District Court could be fought through to finality with final appeal to this Court. If the patent was adjudged invalid by this Court in this first suit no further litigation over the invalid claim was possible. Thus, in one suit, the litigious possibility of the claim was exhausted if invalidity was found, and the litigious possibility of the remainder of the patent was exhausted if the invalidated claim was not promptly disclaimed.

It is confidently asserted, therefore, that there is no rule of law, reason, or logic to support respondents' contention that by the mere creation of the Circuit Courts of Appeals it was intended that thereby a patentee's right to litigate invalid subject matter of his patent is multiplied by the number of Circuit Courts created.

The disclaimer statute was left undisturbed by the Act of 1891. Its meaning and effect are the same today as they were prior to the passage of that Act. Then the patentee was entitled to but one litigation on his patent or any claim thereof if invalidity was the ultimate adjudication. For the same reasons, and under the same unmodified sections of the statute, a patentee today is entitled to no more.

III.

Although respondents reiterate the position taken by them in the Courts below, namely, that the patent should be construed as though no disclaimer had been filed with respect thereto, and although they staunchly adhere to the proposition that even now, at this late date, they are faced with no requirement or necessity for disclaiming the claims previously invalidated by the Court of Appeals for the Third Circuit, respondents seek to excuse their delay of eight months and thirteen days, subsequent to the decision of that Court, in filing the illegal, amendatory disclaimers which were actually filed by them with respect to both of the patents. The excuse advanced is that the patents were involved in interference proceedings, and contests over the title thereto. Surely, interference proceedings and title contests involving the patents constitute no acceptable excuse for failure to comply with statutory requirements. Obviously, any contestants for title have imposed upon them the paramount duty to preserve the life and validity of the subject matter for which the contest is being made. Failure to discharge that duty is inexcusable.

In the final analysis, what is of primary importance is the public right. The public (see *Ensten* v. *Simon Ascher & Co.*, 282 U. S. 455) is entitled to be relieved from "the further evil effects" of the false assertion contained in an undisclaimed invalidated claim of a patent. No private quarrel over title or subject matter can be accepted as an excuse for failure to comply with statutory requirement which is directed to safeguarding the public interest.

Conclusion.

It is submitted that the judgment of the Court below should be reversed, and the decree of the Trial Court dismissing the bill of complaint as to the two patents in suit should be sustained.

Respectfully submitted,

SAMUEL E. DARBY, JR.,
Counsel for Petitioners.

COOK & MARKELL,
Attorneys for Petitioners.

CHARLES MARKELL,
Of Counsel.

FILE COPY

SEP 5

Supreme Court of the United States

OCTOBER TERM, 1935

A. G. TRIPLETT, R. M. TRIPLETT, A. NELSON, C. M. TRIPLETT, JR., AND THE BALTIMORE GASLIGHT COMPANY,
Petitioners,
vs.
PERCIVAL D. LOWELL, FRANCIS W. DUNMORE, and DUBILIER CONDENSER CORPORATION,
Respondents.

No. 388

BRIEF FOR RESPONDENTS IN OPPOSITION TO PETITION FOR WRIT OF CERTIORARI

CLIFTON V. EDWARDS,
GAYLORD LEE CLARK,
JOHN B. BRADY,
Of Counsel for Respondent

INDEX.

	PAGE
OPINIONS BELOW	1
JURISDICTION	1
QUESTIONS PRESENTED	2
STATEMENT	3
ARGUMENT	11
I. The Issue Raised by the Petition Is One of Fact	11
Both courts below held no unreasonable delay by respondent	11
II. There Is No Conflict of Decisions	12
Ensten *v.* Simon Ascher & Co.	12
Altoona Publix Theatres Corp. *v.* American Tri-Ergon Corp.	15
III. The Cases Cited in the Petitioner's Argument pp. 15, 16 are Not in Point	16
Hoe *v.* Goss Printing Press Co.	16
Radio Condenser Co. *v.* General Instrument Co.	16
Better Packages Inc. *v.* Nashua Package Sealing Co.	17
Otis Elevator Co. *v.* Pacific Finance Corp.	17
IV. Petitioner's Questions Present No Novel Question	18
APPENDIX	20
Cases in Which Patents or Trade-Marks Held Invalid in One Circuit Subsequently Have Been Held Valid in Other Circuits	20
I. Cases in the Supreme Court prior to the establishment of the Circuit Court of Appeals	20

PAGE

II. Cases in the Supreme Court where the patent was held invalid by the Circuit Court of Appeals in one circuit, and later held valid by the Circuit Court of Appeals in another circuit 20

III. Cases in Circuit Courts of Appeals where the patent was first held to be invalid by one Circuit Court of Appeals and later held to be valid by another Circuit Court of Appeals (omitting cases which reached the Supreme Court) 24

TABLE OF CASES.

Cases Cited in Argument:

Altoona Publix Theatres, Inc. *v.* American Tri-Ergon Corp., 294 U. S. 477 ..... 15, 16, 18

Better Packages Inc. *v.* Nashua Package Sealing Co., 6 Fed. Supp. 573 and 74 Fed. (2d) 679 17

Carnegie Steel Co. *v.* Cambria Iron Co., 185 U. S. 403, 436 ..... 15, 16, 18

Elevator Supplies Co. *v.* Graham & Norton Co., 44 F. (2d) 354 15

Ensten *v.* Simon Ascher & Co., 282 U. S. 445, 453 ... 11, 12

Hamilton Shoe Co. *v.* Wolf Brothers, 240 U. S. 251, 258 19

Hoe *v.* Goss Printing Press Co., 31 F. (2d) 565 16

Magnum Co. *v.* Coty, 262 U. S. 159, 163 19

Marconi Wireless Telegraph Co. *v.* DeForest Radio Telephone & T. Co., 243 Fed. 560, 565 ..... 16, 18

Mast Foos & Co. *v.* Stover Mfg. Co., 177 U. S. 485 .. 12

Minerals Separation, Ltd. *v.* Butte & Superior Mining Co., 250 U. S. 336, 354 ..... 13, 16, 18

PAGE

Otis Elevator Co. *v.* Pacific Finance Corp., 68 F. (2d) 664 17
Radio Condenser Co. *v.* General Instrument Co., 65 F. (2d) 458 16
Sanitary Refrigerator Co. *v.* Winters, 280 U. S. 30 12
Seiberling *v.* Thropp's Sons Co., 284 Fed. 746, 756, 757 ..... 16, 18
United Chromium Inc. *v.* International Silver Co., 60 Fed. (2d) 913, 914 ..... 16, 18
Westinghouse *v.* Boyden Power Co., 170 U. S. 537, 569, 18 S. Ct. 707, 42 L. Ed. 1136 15

Cases Cited in Appendix:

Abercrombie & Fitch Co. *v.* Baldwin, 254 U. S. 198, 38 S. Ct. 104, 62 L. Ed. 240 22
Backstay Machine & Leather Co. *v.* Hamilton, 262 F. 411 (1920) 26
The Barbed Wire Patent, 143 U. S. 275, 12 S. Ct. 443, 36 L. Ed. 154 20
Corona Cord Tire Co. *v.* Dovan Chemical Corp., 276 U. S. 358, 48 S. Ct. 380, 72 L. Ed. 610 24
Diamond Rubber Co. *v.* Consolidated Rubber Tire Co., 220 U. S. 428, 31 S. Ct. 444, 55 L. Ed. 747 ... 21
Dowagiac Mfg. Co. *v.* Minnesota Moline Plow Co., 235 U. S. 641, 35 S. Ct. 221, 59 L. Ed. 398 21
Expanded Metal Co. *v.* Bradford, 214 U. S. 366, 29 S. Ct. 652, 53 L. Ed. 1034 20
Franc-Strohmenger & Cowan *v.* Arthur Siegman, 27 F. (2d) 785 27
Hanover Star Milling Co. *v.* Metcalf, 240 U. S. 403, 36 S. Ct. 357, 60 L. Ed. 713 21
Imperial Bottle Cap & Machine Co. *v.* Crown Cork & Seal Co., 139 F. 312 (Fourth Circuit) 26

PAGE

Maitland *v.* B. Goetz Mfg. Co., 86 F. 124 (Second Circuit) 25
McNeely *v.* Williames, 96 F. 978 (Third Cir.)..... 25
Meccano, Ltd. *v.* John Wanamaker, 253 U. S. 136, 40 S. Ct. 463, 466, 64 L. Ed. 822..... 23
New York Scaffolding Co. *v.* Chain Belt Co., 254 U. S. 32, 41 S. Ct. 21, 65 L. Ed. 116..... 23
Pieper *v.* S. S. White Dental Mfg. Co., 228 F. 30 (1915) 26
Radio Corp. *v.* Radio Engineering Laboratories, 293 U. S. 1, 54 S. Ct. 752, 55 S. Ct. 66, 79 L. Ed..... 24
Railroad Supply Co. *v.* Elyria Iron & Steel Co., 244 U. S. 285, 37 S. Ct. 502, 61 L. Ed. 1136..... 22
Saranac Automatic Machine Corp. *v.* Wirebounds Patents Co., 282 U. S. 704, 51 S. Ct. 232, 75 L. Ed. 634 24
T. H. Symington Co. *v.* National Malleable Castings Co., 250 U. S. 383, 39 S. Ct. 542, 63 L. Ed. 1045... 22
Thomson-Houston Electric Co. *v.* Black River Traction Co., 135 F. 759 (Second Circuit)..... 26
John E. Thropp's Sons Co. *v.* Seiberling, 264 U. S. 320, 44 S. Ct. 346, 68 L. Ed. 708..... 23
Wenborne-Karpen Dryer Co. *v.* Cutler Dry Kiln Co., 290 F. 625 (1923)..... 27
Westinghouse Elec. & Mfg. Co. *v.* Stanley Instrument Co., 133 F. 167 (First Circuit)..... 25

Supreme Court of the United States

October Term—1935.

A. G. TRIPLETT, R. M. TRIPLETT, A. NELSON, C. M. TRIPLETT, JR., AND THE BALTIMORE GASLIGHT COMPANY, *Petitioners,* vs. PERCIVAL D. LOWELL, FRANCIS W. DUNMORE, AND DUBILIER CONDENSER CORPORATION, *Respondents.*	No. 388.

BRIEF FOR RESPONDENTS IN OPPOSITION TO PETITION FOR WRIT OF CERTIORARI.

Opinions Below.

The opinion of the District Court for the District of Maryland is not reported, but is found at Vol. I, page 263, of the Transcript of Record.

The opinion of the Circuit Court of Appeals (R. Vol. I, p. 417) is reported at 77 Fed. (2d) 556.

Jurisdiction.

The decree of the Circuit Court of Appeals was entered on June 4, 1935 (R. Vol. I, p. 433). Notice of filing the petition for Certiorari was served on August 22, 1935.

The jurisdiction of this Court is invoked under Section 240 (a) of the Judicial Code as amended by the Act of February 13, 1925 (c. 229, 43 Stat. 938; 28 U.S.C.A., §347).

Questions Presented.

1. Where both Courts below have held that respondents are not guilty of unreasonable delay in filing a disclaimer,* shall such finding of fact be reviewed by this Court upon writ of certiorari.

2. Where the Circuit Court of Appeals in one circuit in an initial suit for infringement so interprets the claims of a patent as to hold the same invalid, may the patentees, whom both Courts have held to have acted without unreasonable delay, disclaim such interpretation and, without acquiescing in such decision or disclaiming themselves out of Court, file a second suit in another circuit?

3. Where the Circuit Court of Appeals in an initial suit for infringement of a patent construes the term "means," in the claims, to refer to certain broad features shown in the patent and upon such interpretation holds the claims void for aggregation, may the patentee, not guilty of unreasonable delay, without canceling the claims, adding elements thereto or otherwise changing the language of the claims, assert a narrower interpretation of such term, disclaim the interpretation put upon his claims by said court and bring a second suit in another circuit seeking an interpretation of the term "means" as referring to the features shown and described in the patent and which function in a cooperative manner to constitute invention?

---

*District Court, Vol. I, page 45-47; Circuit Court of Appeals, Vol. I, p. 427.

4. Where the Circuit Court of Appeals in an initial suit upon two radio patents directed to the operation of radio broadcast receivers by alternating current without objectionable hum, construes the term "means" in the claim to refer to a rectifier and filter and erroneously assumes that such rectifier and filter transform household alternating lighting current into smooth direct current equivalent to that from a battery and upon that basis holds no invention, although intimating that if fluctuating currents were delivered to the receiving set in the case of one patent and to the grid circuit in the other patent, is the patentee, not guilty of unreasonable delay and having disclaimed such interpretation of his patent, barred from bringing suit in another circuit and showing that in fact the rectifier and filter do not transform the alternating current into the equivalent of battery current, and that fluctuating current with substantial variations unsuitable for use without more are in fact delivered to the defendants' receiving set and to the grid circuit and asking that the term "means" in the claims construed to cover the means shown and described in the patent to make such fluctuating currents usable in the circuits of the receiving set and in the grid circuit without the objectionable hum?

Statement.

The respondents, Lowell and Dunmore, in 1921 made certain inventions (forming the subject matter of the three patents in suit) which made possible the operation of radio broadcast receiving sets from the ordinary household alternating lighting current, instead of from batteries as had been the previous universal practice.

The inventions were published, embodied in full-sized demonstration sets, and submitted to the leading and other receiving set manufacturers, who were urged, unsuccessfully, to become licensees and to place the inventions on the market. After approximately three years of unsuccessful

efforts to induce set makers to put the inventions on the market agreements were made with the respondent Dubilier Condenser Corporation (Vol. I, pp. 371-380), which expended several hundred thousand dollars in commercial development (Vol. I, p. 231); and license agreements were made with several manufacturers. Up to and including 1927 the license fees amounted to $28,000. (Vol. I, p. 337). In the fall of that year the Radio Corporation and its associated companies manufactured and put upon the market large quantities of infringing alternating current operated receiving sets, with the result of substantially destroying the business built up under the patents by the Dubilier Condenser Corporation. (Vol. I, p. 231).

Suit was brought under the three patents against the Radio Corporation in the United States District Court for the District of Delaware. As a result of a protracted trial, Judge Hugh M. Morris, holding the Court, held the two patents* here involved valid and infringed; the third patent was held not infringed. (34 Fed. (2d) 450).

Shortly after the decision of Judge Morris, the United States filed suits against the several respondents asserting ownership of the inventions and seeking to acquire title to each of the three patents. (Vol. II, pp. 475-536). Two of these suits were against respondent Lowell in the Eastern District of New York, three against respondent Dunmore in the District of Columbia, three against respondent Dubilier Condenser Corporation in the District of Delaware, and one against the Morkrum Company, a licensee, in the District of Maine.

At about the same time four interference contests were instituted in the Patent Office against patent 1,455,141 by rival inventors, some backed by powerful companies, seeking to wrest the invention from respondents. (Vol. I, pp. 459, 474).

*Claim 9 of patent 1,635,117 covering the earliest invention, and claims 3 and 14 of patent 1,455,141.

The Radio Corporation appealed to the Circuit Court of Appeals for the Third Circuit from so much of the decree of Judge Morris as held the two patents valid and infringed; plaintiffs took no appeal.

Patent 1,635,117.

The earliest invention, patent 1,635,117, was directed to applying alternating current to the grid circuit of the tube in such manner as to maintain thereon a steady unvarying negative potential, a matter of extreme delicacy since the grid is the most sensitive part of the tube and any variation of potential thereon is repeated in the output circuit in greatly amplified form which is heard in the phones or loudspeaker as a hum. To accomplish his object the patentee disclosed a resistance 18 in the grid circuit shunted by a condenser 19; he also showed a conventional rectifier 13 interposed between the house lighting circuit and the resistance and condenser.

The Circuit Court of Appeals for the Third Circuit (59 Fed. (2) 305), overlooking the function of the resistance and condenser, held that the term "means" in the claim applied to the rectifier 13 and "filter" 19 which it assumed to be like a so-called "Hull" filter, and further assumed that a "Hull" filter would transform the house lighting current into smooth direct current, the full equivalent of the steady direct current formerly derived from a battery. Upon the basis of the latter misconception the Court held in substance that nothing more was involved than employing a well known instrument to transform alternating current into direct current and feeding direct current to the grid circuit.

Respondents believed that in this holding two fundamental errors were involved:

First, in identifying the "means" of the claim as rectifier 13 and condenser 19, whereas the real "means" of the claim are the resistance 18 and small condenser 19.

Second. In assuming that the rectifier 13 and small condenser 19 could function to transform the household lighting current into anything comparable to the required steady voltage as from a battery; and in not recognizing that in fact the rectifier, even in conjunction with a suitable condenser, delivers a rising and falling current, the fluctuations having substantial amplitude which without other means would result in loud hum in the output of the tube. Moreover, the so-called "Hull" filter, which includes one or more inductance coils in addition to one or more condensers and the rectifier, in fact delivers substantial fluctuations unless the number of condensers and induction coils be increased to such an extent that the expense would be prohibitive in ordinary radio receivers, as a result of which a less expensive "Hull" filter is commonly used (as does defendant here) and the fluctuating output delivered therefrom to the grid circuit, the Dunmore invention being employed to derive the required steady grid voltage therefrom.

That the decision of the Circuit Court of Appeals would have been in favor of the patent if it had correctly understood the fact in this respect, is shown by the opinion of the Court, which indicates (p. 310) that the Court believed, as indeed the prior art did, that alternating current on the grid circuit would not do at all, for the Court said

> "substituted alternating current would not do the work of direct current in the tube."

And further (p. 310):

> "Here, as in the Lowell and Dunmore patent, there would be invention and a very important one had the patentee invented all its elements, or had he brought old elements into new cooperative function."

In order to avoid any misconception as to the proper interpretation of the term "means", in the claims, the

respondents, on July 8, 1933, filed in the Patent Office a disclaimer, which in effect merely states that the patentee does not interpret the word "means" as including any means except such as include the resistance 18 shunted by condenser 19, both of which elements are the "means" shown and described in the patent specification.

Patent 1,455,141.

This patent is directed to the operation of the receiver by alternating current. At the date of the invention the prevailing type of receiver was of the so-called regenerative type in which the functions of amplification of both radio and audio frequency and detection were combined. Lowell and Dunmore employed a type in which the three functions of radio amplification, detection, and audio amplification are separated; in the radio frequency portion the weak received modulated carrier wave is amplified, without change, in the detector portion one half of each cycle of the carrier wave is suppressed, and in consequence only the lower frequency modulation is passed on from the output, and in the audio amplification portion the low, i. e., audio frequency modulation, is amplified and delivered to the telephones or loud speaker.

The universal practice prior to Lowell and Dunmore was to use wet and dry cell batteries respectively for the filament and plate circuits of the tubes. To apply 60 or 120 cycle household alternating current to these circuits would destroy the modulation in the radio frequency portion where the amplitude of the power current would be many times that of the carrier wave and its modulation and progressively to build up the amplification of the power current as it passed through successive stages, and so to drown out entirely the desired carrier modulation.

The Circuit Court of Appeals (59 Fed. [2d] 509), construed the term "means" etc. for eliminating hum, designated in the opinion as element "f" of the claims, as

comprising a "mid-point connection" shown in a prior Heising & White patent, and held in effect that Lowell and Dunmore merely applied this mid-point connection to each section of the instrument and attained nothing more than a mere aggregation (pp. 307,308).

Respondents believed that in this holding two fundamental errors were involved:

First, in identifying the "means" as the same midpoint connection for all three sections of the instrument, whereas in the patent the "means" are shown and described as comprising, (a) in the radio frequency portion a midpoint connection 17, a resistance 29 shunted by a condenser in the grid circuit, and a radio frequency transformer or transformers 4, 6, in the output circuit, whereby in that portion of the instrument the weak modulated carrier wave is amplified without impairing the modulation, and such power frequency as may be introduced (by variation of filament temperature, induction upon the circuits or otherwise) is prevented by the radio frequency transformer from passing to the detector, thus in effect raising the level of the carrier modulation and lowering the level of any power frequency, (b) in the detector portion a detector having small inherent ability itself to create hum, such as a crystal 9, and means for reducing the introduction of power frequency, such as bypass condenser 9a (these being the equivalent of the more modern indirect heated tube and a midpoint connection), whereby without impairing the modulation and with or without further amplification, the carrier frequency is suppressed and the modulation only is passed on with minimum or no introduction of power frequency, and (c) in the audio frequency portion a midpoint connection 18, whereby the possible introduction of power frequency is reduced, so that its level is low compared to that of the now very high level of the modulation frequency.

Second, in assuming that the midpoint connection can do more than reduce, more or less, the introduction of power frequency and in not realizing that the true "means" in the several parts of the instrument do involve a "new cooperative relation" (308), and that whereas applying the same means to each portion of the instrument would not prevent signal distortion and cumulative increase of power frequencies, Lowell and Dunmore's several means preserve the integrity of the modulation while separating it from the carrier frequency and progressively raising its level so far above any possible introduced power frequency that the latter cannot be heard.

Had the Circuit Court of Appeals not made the mistaken assumption of fact that nothing more was involved than the mere separation of parts containing already old hum eliminating means, it is believed to be clear from their opinion that the claims would have been upheld. This is shown by the language at page 307:

> "It might be invention if, when operating, some hum should develop in the first section and pass over to the second section, or if hum in these two sections should invade the third section and be suppressed before it reaches the loud speaker by the three hum eliminators coacting to that end. In other words, there might be invention if the hum eliminators, though separately placed, functioned together on the circuits of all sections in eliminating wandering hum."

Indeed in the earlier part of the opinion the Court said (p. 307):

> "This is a highly scientific organization, and this is what Lowell and Dunmore say they invented. Looking at it as they disclose it, that is, looking at it close up without looking at its background, it would appeal to any one as invention. If they had invented this apparatus and all its elements, their invention unquestionably would have been basic; it would have been more than that; it would have

been stupendous, for it would have covered the major portion of the practical radio art as it stands today."

In order to avoid any misconception as to the proper interpretation of the term "means" in the claims, the respondents, on July 8, 1933, filed in the Patent Office a disclaimer which in effect merely states that the patentees do not interpret the word "means" as including any means except such as include the above mentioned means in the several portions of the instrument shown and described in the patent.

During all of the time the appeals to the Circuit Court of Appeals for the Third Circuit were pending the before mentioned suit of the United States to acquire title, and the interference contests were proceeding vigorously.

In the title litigation the suits against the Dubilier Condenser Corporation in Delaware were brought to trial and subsequently appealed to the Circuit Court of Appeals for the Third Circuit. A decision was rendered by the Circuit Court of Appeals in these cases shortly after the decisions of the same Court in the patent suits, and petitions for certiorari were filed by respondents in the patent suits and by the government in the title suit.

An order consolidating the cases for purposes of appeal having been made, and a petition for rehearing having been filed in the Circuit Court of Appeals with respect to patent 1,635,117, it was assumed that appellants' time to apply for a writ of certiorari ran from the date of the denial of the petition for rehearing. This Court, however, denied the petition with respect to patent 1,455,141 because not applied for in time, and denied the other petition without stating the reason (287 U. S. 648 and 650). The petition of the government in the title case was granted October 17, 1932 (287 U. S., 588). The bills of complaint in these cases not only demanded title to the patents but also asked that respondents be treated as trustees and be

made to account for all receipts from the patents. The decision of this Court in these cases was rendered April 10, 1933 (289 U. S., 178), and then counsel for the government advised the parties that the Department of Justice had under consideration the bringing of the suits against Lowell and Dunmore to trial (Vol. I, p. 27) and did not dismiss any of the suits against the parties.

In the meantime plaintiffs-appellants were advised (Vol. I, p. 28) that if disclaimers were filed by respondents, the government, if successful in its litigation, might claim that respondents had rendered themselves liable for destroying or impairing the value of government property (see also prayers of the government bills (Vol. II, pp. 53, 62, 71, 79, 87, 95, 104, 113, 122). These suits were dismissed June 8, 1933 and July 3, 1933 respectively (Vol. II, p. 537). *Five days later the disclaimers were filed* (Vol. II, pp. 446, 458).

The interference cases were terminated shortly thereafter by decrees holding Lowell and Dunmore to be the first inventors of the subject matter of patent 1,455,141.

ARGUMENT.

I.

The Issue Raised by the Petition Is One of Fact.

In *Ensten* v. *Simon Ascher & Co.*, 282 U. S., 445, 453, this Court held that unreasonable delay in filing a disclaimer is a question of fact for the Court or jury to decide. Both Courts below have found that respondents were not guilty of unreasonable delay. (Vol. I., pp. 45-47; Vol. I., p. 427).

II.

There Is No Conflict of Decisions.

No case has been cited by petitioner denying the right of a patentee, defeated in the Circuit Court of Appeals for one circuit, and who has not acquiesced in that decision and who proceeds with reasonable diligence, to sue in another circuit and there seek a contrary decision.

Nor has petitioner cited any case departing from the established rule that in the absence of estoppel, and absence of unreasonable delay the decision of one Circuit Court of Appeals has only the weight of comity in another circuit. *Mast Foos & Co.* v. *Stover Mfg. Co.*, 177 U. S. 485; *Sanitary Refrigerator Co.* v. *Winters*, 280 U. S. 30.

In *Ensten* v. *Simon Ascher & Co.*, 282 U. S. 445, cited by petitioners this Court stated the law as follows (p. 455):

> "When a competent court has declared his pretensions without sufficient foundation, we think good faith and the spirit of the enactment demand that he act with such promptness as the circumstances permit **either to vindicate his position or to relieve the public from further evil effects of his false assertion.**" (Emphasis by counsel.)

We submit that nothing in the *Ensten* case indicates any withdrawal or cancellation of the long established right of a litigant defeated in one circuit to seek a different result in another circuit. (See Appendix A.) On the contrary, we submit, the Ensten decision expressly recognizes that right since it points out the two alternatives open to the patentee "whenever he becomes aware that he has claimed more than he has invented or described," i.e. he must "*either*" "*vindicate his position*" or "relieve the pubilc from further evil effects of his false assertion."

In that case the patentee's claim had been held invalid by a decree of a District Court, from which no appeal was taken. He then (p. 455)

> "continued to hold himself out as possessor of the sole right to 'make, use and vend' under the rejected claim for **nearly two years. Then he abandoned it.**" (Emphasis by counsel.)

In the case at bar, we submit, the respondents have conformed to "good faith and the spirit of the enactment" as well as to the rule laid down in the *Ensten* case.

At the time of the denial of their petitions for certiorari by this Court on October 25, 1932, the government title suit was still pending before this Court undecided. There was grave question, as is indicated by the dissenting opinions in this Court (289 U. S. 178) as to whether respondents had the right to file disclaimers, whether if held not to have title they might still be held to be trustees and any disclaimer filed by them be held effective as to any rights disclaimed, and whether they would not be held liable for any such disposition or impairment of the patent rights. They were so advised, and under the circumstances we submit that good faith required that they await the then pending decision of this Court.

That decision was rendered on April 10, 1933. Even then the individual inventors were not entirely assured, because the government counsel indicated an intention to bring to trial the suits against the inventors in New York and the District of Columbia. (Vol. I., p. 27.) It was not until June 8, 1933 and July 3, 1933 that these suits were dismissed.

During this period also the interference contests further beclouded the situation as to whether any of the several alleged inventors was prior to these patentees.

On July 8, 1933, eighty-nine days after the decision of this Court regarding the title* and five days after the dismissal of the last of the title suits against the inven-

*In *Minerals Separation Ltd.* v. *Butte & Superior Mining Co.*, 250 U. S. 336, 354, a delay of three months after a decision of this court invalidating a certain claim was held not to be unreasonable in view of the fact that the patentees resided in a foreign country.

tors, respondents, we submit in compliance with "the spirit of the enactment" on July 8, 1933, gave notice to the public both that they did not accept or acquiesce in the decisions of the Circuit Court of Appeals for the Third Circuit and that they did not interpret the term "means" as claiming the broad subject matter attributed to them by that court.

We submit that the Courts below were fully justified in finding that respondents proceeded with reasonable promptness in view of the burden and uncertainty of the title litigation, the interference contests, the limited resources of the respondents and the necessity of finding and examining a provable instance of infringement in the new district and giving suitable notice to the infringer.

The disclaimers did not in fact cancel any claims, change the wording thereof or the wording of the specification, nor did they subtract or add any elements, or seek to give any meaning to the claims other than, as stated in the opinion of the Circuit Court of Appeals for the Fourth Circuit: (77 F. [2d] 556, 557; Vol. I, p. 419.)

> "to ensure that the broad language of the claims would be given more definite meaning by reference to the disclosures of the patent so as to cover what is there described, or the equivalent thereof, in accordance with the well-established rule that in interpreting the language of a claim, the words are not to be taken literally but in the sense in which they were used by the inventor as disclosed in his specification. Elevator Supplies Co. *v.* Graham & Norton Co. (C. C. A.) 44 F. (2d) 354; Westinghouse *v.* Boyden Power-Brake Co., 170 U. S. 537, 568, 569, 18 S. Ct. 707, 42 L. Ed. 1136."

Thus the question here reduces to the simple question of the right of a defeated patentee, who has not acquiesced in the unfavorable decision, to proceed in another circuit "with such promptness as the circumstances require."

Not only do we find such right recognized in the *Ensten* case, but we find nothing in *Altoona Publix Theatres Corp.* v. *American Tri-Ergon Corp., et al.*, 294 U. S. 477, inconsistent therewith. There it was held that no invention was involved in employing a fly wheel for imparting uniformity to the motion of a film and that a disclaimer which sought to *add* the fly wheel as an element to certain claims was void and hence the whole patent was void. The case, we submit, has no bearing here because the finding of non-invention in the use of a fly wheel precluded any attempt to save the remaining claims even if the attempt to reissue the patent by way of disclaimer did not preclude such attempt.

The disclaimer there involved was not at all of the type of that here involved, as is asserted in the petition, p. 2. There the patentee instead of standing upon the claim as written sought by way of disclaimer to change his claim to read except when a fly wheel was connected to the film through the "means," thus adding the fly wheel connected to the film, as an element *additional* to the "means," i.e., to "add the fly wheel to the arcuate flexing claim" (294 U. S., 491).

In the instant case the patentees stand upon their claims exactly as written and upon their right to have the term "means" therein construed as by law they are entitled to have them construed, i.e., to be the same as or substantial equivalent of the means shown and described in the specifications (*Westinghouse* v. *Boyden Power Co.*, 170 U. S., 537, 568, 569; *Elevator Supplies Co.* v. *Graham & Norton Co.*, 44 Fed. [2d] 354); their disclaimers go no further than that, as has been recognized by all parties hereto.

Nor is there *any* attempt here to revive an abandoned claim. The disclaimers in this case are not invalid, but are of the type referred to in *Carnegie Steel Co.* v. *Cambria Iron Co.* 185 U. S. 403, 436, where this Court held:

> "If the clauses had the effect of broadening the patent the disclaimer removes the objection. If they did not the disclaimer could do no harm, and cannot be made the subject of criticism."

The disclaimer in the *Carnegie* case is referred to with approval in the decision in the *Altoona Publix Theatres* case. (See footnote 477 U. S., 490).

See also disclaimers in *Minerals Separation Ltd.* v. *Butte & Superior Co.*, 250 U. S., 336, 354; *Marconi Wireless Telegraph Co.* v. *De Forest Radio Telephone & T. Co.*, 243 Fed., 560, 565; *United Chromium Inc.* v. *International Silver Co.*, 60 Fed. (2d), 913, 914; and *Seiberling* v. *Thropp's Sons Co.*, 284 Fed., 746, 756, 757, all of which are referred to with approval in the above cited footnote in the *Altoona Publix Theatres* case.

III.

The Cases Cited in the Petitioner's Argument Pp. 15, 16 Are Not in Point.

In *Hoe* v. *Goss Printing Press Co.*, 31 F (2d) 565, the Court merely held that if plaintiff there desired to proceed further *in that case* it must disclaim within thirty days. No question arose as to the right of the patentee to proced elsewhere without accepting the decision of that Court and nothing in the Court's opinion negatived the right to do so. By inference the decision recognized the right of the plaintiff to abandon further proceedings in that case and proceed elsewhere since it gave plaintiff thirty days in which to decide.

In *Radio Condenser Co.* v. *General Instrument Co.*, 65 F (2d) 458, the District Court held that a delay of *approximately* **five years** *after acquiescing in a decision of the Patent Office that the patentee was not the inventor* was

unreasonable. Apparently the case was not appealed to the Circuit Court of Appeals. In any event no such delay is involved here.

In *Better Packages Inc.* v. *Nashua Package Sealing Co.*, 6 Fed. Supp. 573 and 74 Fed. (2d), 679, where previously a claim had been held to be invalid *the ruling was acquiesced in by plaintiff taking no appeal.* After 83 days a new suit was brought *in the same court.* Apparently no excuse was given as to why appeal was not taken in the first case. The District Court held that the delay was unreasonable. The circumstances, other than above stated, do not appear. The issue was purely one of fact. Certiorari was denied. 295 U. S. ... (#888 October Term, 1934. See 55 S. C., 830.)

In the Ninth Circuit in *Otis Elevator Co.* v. *Pacific Finance Corp.*, 68 Fed. (2d) 664, a special master had found a claim to be invalid for failure to comply with Section 4888 of the Revised Statutes, the claim being so broad as to be ambiguous. *No exception was taken to this finding.* The Circuit Court of Appeals held that:

> "The specific question whether or not a claim invalid only for indefiniteness invalidates the entire patent appears to be an open one."

But the Court also held that the claim there involved covered more than that of which the patentee was the original or first inventor and hence that a disclaimer *was* required. No other excuse was offered by the plaintiff for its delay of **fourteen months** (p. 671) and the ruling of the Court was that under the circumstances of that case the delay of fourteen months was too long.

Thus in all of the cases cited by petitioner the patentee had *acquiesced* in a finding of invalidity instead of "vindicating his position" and the question of delay was merely one of fact.

IV.

Petitioner's Questions Present No Novel Question.

The questions specifically presented by the petition for certiorari (p. 4) are, we submit, already answered by the decisions of this Court.

Petitioners' Question 1 is, we submit, fully answered by the long line of decisions set forth in Appendix A hereof.

Question 2, we submit, is fully answered by the *Ensten* case, and the petition merely seeks to reverse the fact finding of both Courts below that respondents were not guilty of unreasonable neglect or delay.

Question 3 assumes the filing of an inadequate and invalid disclaimer, whereas in the case at bar respondents' disclaimers adequately disclaim the interpretation put upon their claims by the Circuit Court of Appeals for the Third Circuit and without acquiescing in such decision have asserted their right to stand upon their own interpretation of the claims as written and applied to the structures shown and described in the specification. Disclaimers of this type are not invalid. *Carnegie Steel Co.* v. *Cambria Iron Co.*, 185 U. S. 403; *Marconi Wireless Telegraph Co.* v. *DeForest Radio Telephone & Telegraph Co.*, 243 Fed. 560; *Minerals Separation Ltd.* v. *Butte & Superior Mining Co.*, 250 U. S. 336, 354; *United Chromium, Inc.* v. *International Silver Co.*, 60 Fed. (2d) 913, 914; *Seiberling* v. *Thropp's Sons Co.*, 284 Fed. 746, 756, 757; *Altoona Publix Theatres, Inc.* v. *American Tri-Ergon Corp.*, 294 U. S. 477, 490.

Petitioners, we submit, merely seek a ruling overturning established law which if applied to this case would mean that the patentees after having their patent upheld in one court, their title confirmed by this court, their priority over other and rival inventors confirmed in burdensome interference contests, would be robbed of all right of redress and their contribution of one or more of the

great advances in the radio art go unrewarded, because of a decision which, while acknowledging the presence of a high degree of invention if the facts were as claimed by the patentee, was based upon a mistaken understanding of the basic facts of operation of the devices in question.

The decision of the Circuit Court of Appeals, we submit, was manifestly in accordance with the facts and the law. There is no conflict of decisions; nor is there any question of public or general importance. *Magnum Co.* v. *Coty*, 262 U. S., 159, 163; *Hamilton Shoe Co.* v. *Wolf Brothers*, 240 U. S., 251, 258. The petition should be denied.

Respectfully submitted,

CLIFTON V. EDWARDS,
GAYLORD LEE CLARK,
JOHN B. BRADY,
of Counsel for Respondent.

September 3, 1935.

APPENDIX

Cases in Which Patents or Trade-marks Held Invalid in One Circuit Subsequently Have Been Held Valid in Other Circuits.

I.

Cases in the Supreme Court prior to the establishment of the Circuit Court of Appeals:

The Barbed Wire Patent, 143 U. S. 275, 12 S. Ct., 443, 36 L. Ed. 154, although no diversity of opinion existed in the lower courts, indicates the practice prior to the act establishing the Circuit Courts of Appeal.

The original patent had been held to be invalid by the Circuit Court for the Northern District of Illinois. *Washburn & Moen Mfg. Co.* v. *Haish*, 4 F. 900. The patent was then reissued and in *Washburn & Moen Mfg. Co.* v. *Fuchs*, 16 F. 661, 667, the Circuit Court for the Eastern District of Missouri held the reissue to be unwarranted and void. Suits were then brought upon the original patent in the Circuit Court for the Northern District of Iowa (*Washburn & Moen Mfg. Co.* v. *Beat 'Em All Barbed-Wire Co.*, 33 F. 261), the patent was again held invalid. The Supreme Court held the original patent to be valid.

II.

Cases in the Supreme Court where the patent was held invalid by the Circuit Court of Appeals in one circuit, and later held valid by the Circuit Court of Appeals in another circuit:

Expanded Metal Co. v. *Bradford*, 214 U. S. 366, 29 S. Ct. 652, 53 L. Ed. 1034. The patent was held to be invalid by the Circuit Court of Appeals for the Third Circuit. *Bradford* v. *Expanded Metal Co.*, 146 F. 984. After the decree in the Circuit Court of Appeals for the Third Circuit,

plaintiff filed a bill against another defendant in the Northern District of Ohio. The District Court (*Expanded Metal Co.* v. *General Fireprobfing Co.*, 157 F. 564), held the patent to be invalid on the authority of the case in the Circuit Court of Appeals for the Third Circuit. On appeal the Circuit Court of Appeals for the Sixth Circuit reversed this finding and held the patent to be valid. *Expanded Metal Co.* v. *General Fireproofing Co.*, 164 F. 849. On certiorari from the decree in the Sixth Circuit the Supreme Court held the patent to be valid.

Diamond Rubber Co. v. *Consolidated Rubber Tire Co.*, 220 U. S. 428, 31 S. Ct. 444, 55 L. Ed. 527. The patent was held to be invalid by the Circuit Court of Appeals for the Sixth Circuit in *Goodyear Tire & Rubber Co.* v. *Rubber Tire Wheel Co.*, 116 F. 363; also by the same court in *Rubber Tire Wheel Co.* v. *Victor Rubber-Tire Co.*, 123 F. 85. In subsequent litigation the Circuit Court of Appeals for the Second Circuit held the patent to be valid. *Consolidated Rubber Tire* v. *Firestone Tire & Rubber Co.*, 151 F. 237; also in *Consolidated Rubber Tire Co.* v. *Diamond Rubber Co.* (C. C. A.) 162 F. 892. The Supreme Court held the patent to be valid.

Dowagiac Mfg. Co. v. *Minnesota Moline Plow Co.*, 235 U. S. 641, 35 S. Ct. 221, 59 L. Ed. 398, did not involve the validity of the patent, but the Circuit Court of Appeals for the Sixth Circuit had held plaintiff to be entitled to defendant's entire profits. *Brennan & Co.* v. *Dowagiac Mfg. Co.*, 162 F. 472. Subsequently the Circuit Court of Appeals for the Eighth Circuit held plaintiff to be entitled only to nominal damages. *Dowagiac Mfg. Co.* v. *Minnesota Moline Plow Co.*, 183 F. 314. The Supreme Court, after stating the law, substantially followed the ruling of the Eighth Circuit but reversed the decree for special reasons.

Hanover Star Milling Co. v. *Metcalf*, 240 U. S. 403, 36 S. Ct. 357, 60 L. Ed. 713. A suit on the trade-mark "Tea Rose" was dismissed by the Circuit Court of Appeals for

the Fifth Circuit. *Metcalf* v. *Hanover Star Milling Co.*, 204 F. 211. In a suit in the Seventh Circuit filed shortly before the decision in the Fifth Circuit, the Circuit Court of Appeals for the Seventh Circuit upheld plaintiff's rights in part. *Hanover Star Milling Co.* v. *Allen & Wheeler Co.*, 208 F. 513. Because of a diversity upon fundamental questions, the Supreme Court took both cases and decided the questions in dispute.

Railroad Supply Co. v. *Elyria Iron & Steel Co.*, 244 U. S. 285, 37 S. Ct. 502, 61 L. Ed. 1136. In copending cases the patent was held invalid by the Circuit Court of Appeals for the Sixth Circuit. *Railroad Supply Co.* v. *Elyria Iron & Steel Co.*, 213 F. 789, and valid by the Circuit Court of Appeals for the Seventh Circuit. *Railroad Supplies Co.* v. *Hart Steel Co.*, 222 F. 261. The Supreme Court held the patent invalid.

Abercrombie & Fitch Co. v. *Baldwin*, 245 U. S. 198, 38 S. Ct. 104, 62 L. Ed. 240. The original Letters Patent were held invalid by the Circuit Court of Appeals for the Seventh Circuit. *Bleser* v. *Baldwin*, 199 F. 133. The patent was then reissued and the reissue held void by the Circuit Court of Appeals for the Third Circuit. *Grier Bros. Co.* v. *Baldwin*, 219 F. 735. The Circuit Court of Appeals for the Second Circuit then held the reissue patent to be valid. *Baldwin* v. *Abercrombie & Fitch Co.*, 228 F. 895. The Supreme Court held the patent to be valid and subsequently (*Simmons Co.* v. *Grier Bros. Co.*, 258 U. S. 82, 42 S. Ct. 196, 66 L. Ed. 475) upheld an application to reopen the case in the Third Circuit.

T. H. Symington Co. v. *National Malleable Castings Co.*, 250 U. S. 383, 39 S. Ct. 542, 63 L. Ed. 1045. The question was one of priority as between Emerick and Byers. The Circuit Court of Appeals for the Seventh Circuit held that Emerick was prior. *Miner* v. *T. H. Symington Co.*, 229 F. 730. Subsequently the Circuit Court of Appeals for the First Circuit held Byers to be prior. *National Mal-*

leable Castings Co. v. *T. H. Symington Co.*, 230 F. 821. The Supreme Court held Byers to be the prior inventor.

Meccano, Ltd. v. *John Wanamaker*, 253 U. S. 136, 40 S. Ct. 463, 466, 64 L. Ed. 822. The District Court in the Southern District of Ohio upheld the patent. The Circuit Court of Appeals for the Sixth Circuit (*Wagner* v. *Meccano, Ltd.*, 246 F. 603) reversed the District Court and held the patent invalid. Meanwhile suit had been brought in the Southern District of New York where a preliminary injunction was granted and an appeal was taken therefrom. After the decision of the Circuit Court of Appeals for the Sixth Circuit, motion was made before the Circuit Court of Appeals for the Second Circuit to dismiss the New York case. The Circuit Court of Appeals for the Second Circuit (*Meccano, Ltd.* v. *John Wanamaker*, 250 F. 250) denied the motion and subsequently (*Meccano* v. *John Wanamaker*, 250 F. 450) reversed the order granting a preliminary injunction, at the same time expressing the opinion that the patent was invalid. On certiorari the Supreme Court affirmed the Second Circuit, stating that the matter for review was "upon the preliminary order for injunction and we may go no further," and remanded the cause to the District Court for further proceedings.

New York Scaffolding Co. v. *Chain Belt Co.*, 254 U. S. 32, 41 S. Ct. 21, 65 L. Ed. 116. After the Circuit Court of Appeals for the Eighth Circuit had held the patent to be invalid (*New York Scaffolding Co.* v. *Whitney*, 224 F. 452), and the Circuit Court of Appeals for the Third Circuit had held the patent to be invalid (*New York Scaffolding Co.* v. *Liebel-Binney Construction Co.*, 243 F. 577), the Circuit Court of Appeals for the Seventh Circuit held the patent to be valid (*Chain Belt Co.* v. *New York Scaffolding Co.*, 245 F. 747). The Supreme Court held the patent to be invalid.

John E. Thropp's Sons' Co. v. *Seiberling* 264 U. S. 320, 44 S. Ct. 346, 68 L. Ed. 708. The Circuit Court of Appeals

for the Sixth Circuit held two claims invalid. *Firestone Tire & Rubber Co.* v. *Seiberling,* 257 F. 74. After qualified disclaimers, the Circuit Court of Appeals for the Third Circuit held the patent as qualified by the disclaimers valid. *Seiberling* v. *John E. Thropp's Sons' Co.,* 284 F. 746. The Supreme Court held the patent to be invalid.

Corona Cord Tire Co. v. *Dovan Chemical Corp.,* 276 U. S. 358, 48 S. Ct. 380, 72 L. Ed. 610. The patent was first held invalid by the Circuit Court of Appeals for the Second Circuit. *Dovan Chemical Corp.* v. *National Analine & Chemical Co.,* 292 F. 555. The patent was then held valid by the Circuit Court of Appeals for the Third Circuit. *Dovan Che.* ... *orp.* v. *Corona Cord Tire Co.,* 10 F. (2d) 598. The Supreme Court held the patent to be invalid.

Saranac Automatic Machine Corp. v. *Wirebounds Patents Co.,* 282 U. S. 704, 51 S. Ct. 232, 75 L. Ed. 634. The patent was held invalid by the Circuit Court of Appeals for the Seventh Circuit in *Wirebounds Patents Co. v. H. R. Gibbons Box Co.,* 25 F (2d) 363. Subsequently the Circuit Court of Appeals for the Sixth Circuit held the patent valid and infringed. *Wirebounds Patents Co.* v. *Saranac Automatic Mach. Corp.* 37 F. (2d) 830. The Supreme Court held the patent invalid.

Radio Corp. v. *Radio Engineering Laboratories,* 293 U. S. 1, 54 S. Ct. 752, 55 S. Ct. 66, 79 L. Ed. .... After the Supreme Court had held DeForest to be the prior inventor the Circuit Court of Appeals for the Second Circuit held Armstrong to be the inventor. 66 F. (2d) 768. The Supreme Court upheld DeForest.

III.

Cases in Circuit Courts of Appeals where the patent was first held to be invalid by one Circuit Court of Appeals and later held to be valid by another Circuit Court of

Appeals (omitting cases which reached the Supreme Court):

Maitland v. *B. Goetz Mfg. Co.*, 86 F. 124 (Second Circuit). Stiringer patent held invalid by Circuit Court of Appeals for the Third Circuit. *Maitland* v. *Gibson*, 63 F. 840. Patent then surrendered and reissued by narrowing claim 1. The reissued claim 1 held valid by Circuit Court of Appeals for the Second Circuit.

McNeely v. *Williames*, 96 F. 978 (Third Circuit). Certain claims were held invalid in 1890 by the Circuit Court for the Second Circuit (*Williames* v. *Barnard*, 41 F. 358), the opinion stating that on filing a disclaimer of the claims held invalid complainants were entitled to a decree upon the other claims. Apparently no appeal was taken by the defendant and at that time plaintiff had no right of appeal from the dismissal. For some reason not apparent on the record, a decree was, according to the opinion of the court in the Third Circuit (96 F. 978, page 980), entered on June 11, 1892, without any disclaimer having been filed.

Suit was brought in the Third Circuit on January 27, 1893. Defendant asserted (96 F. 978, page 980) that "The patent in suit is wholly void by reason of unreasonable neglect or delay" to enter a disclaimer. The Circuit Court of Appeals for the Third Circuit held (96 F. 978, page 986), "We must, therefore, hold that the Reid & Billinton apparatus did not anticipate any of the claims of the patent in suit, and consequently that Williames was under no obligation to enter a disclaimer," and held the patent valid.

Westinghouse Electric & Mfg. Company v. *Stanley Instrument Co.*, 133 F. 167 (First Circuit). The patent was held invalid by the Circuit Court of Appeals for the Second Circuit (*Westinghouse Electric & Mfg. Co.* v. *Catskill, etc., Co.*, 121 F. 831), holding plaintiff's attempted antedating proofs to be insufficient. The Circuit Court of

Appeals for the First Circuit upon more complete proofs held the patent valid. So did the Circuit Court of Appeals for the Seventh Circuit in *Diamond Meter Co.* v. *Westinghouse Electric & Mfg. Co.*, 152 F. 704.

Thomson-Houston Electric Co. v. *Black River Traction Co.*, 135 F. 759 (Second Circuit). In this case the patent had been held invalid by the Circuit Court of Appeals for the Second Circuit in *Thomson-Houston Elec. Co.* v. *Union Ry. Co.*, 86 F. 636, and also by the Circuit Court of Appeals for the Sixth Circuit in *Thomson-Houston Elec. Co.* v. *Jeffrey Mfg. Co.*, 101 F. 121. Subsequently the patent was reissued. In the previous litigation (*Thomson-Houston Elec. Co.* v. *Union Ry. Co.*, 86 F. 636) plaintiff urged that the claim contains certain features by implication and therefore was not anticipated. The reissue specification contained a disclaimer limiting the claim to the features in question. It was held that the reissued claim was not for different inventions, and that the claim was valid.

Imperial Bottle Cap & Machine Co. v. *Crown Cork & Seal Co.*, 139 F. 312 (Fourth Circuit). Pending consideration of the case by this court, the Circuit Court of Appeals for the Second Circuit held the patent invalid. *Crown Cork & Seal Co.* v. *Standard Stopper Co.*, 136 F. 841. This court recognizing the doctrine of comity, nevertheless held the patent to be valid.

Pieper v. *S. S. White Dental Mfg. Co.*, 228 F. 30 (1915). Patent held valid and infringed by the Circuit Court of Appeals for the Seventh Circuit. Previously in 1908 the patent had been held invalid by the Circuit Court of Appeals for the Second Circuit. *Pieper* v. *Electro Dental Mfg Co.*, 160 F. 930.

In *Backstay Machine & Leather Co.* v. *Hamilton*, 262 F. 411 (1920), certain claims were held invalid. In a subsequent suit, *Backstay Machine &Leather Co.* v. *Zenite Metal Co.*, 293 F. 23, the Circuit Court of Appeals for the Sev-

enth Circuit held the same claims to be valid and infringed.

In *Wenborne-Karpen Dryer Co.* v. *Cutler Dry Kiln Co.*, 290 F. 625 (1923), the Circuit Court of Appeals for the Second Circuit held the patent void for lack of invention. After the decision in the Second Circuit, the defendant, in a pending suit in the Sixth Circuit, moved to dismiss upon the ground of privity between the parties. The Circuit Court of Appeals in the Sixth Circuit overruled the plea of privity, reversed a decree of the lower court dismissing the bill, and remanded the case for hearing on the merits. *Wenborne-Karpen Dryer Co.* v. *Dort Motor Car Co.*, 14 F. (2d) 378.

In *Franc-Strohmenger & Cowan* v. *Arthur Siegman*, 27 F. (2d) 785, the patent was held valid after it had been held invalid by the Circuit Court of Appeals for the Sixth Circuit, *Forchheimer* v. *Franc, Strohmenger & Cowan*, 20 F. (2d) 553.

FILE COPY

Supreme Court of the United States

OCTOBER TERM, 1935

A. G. TRIPLETT, R. M. TRIPLETT, A. NELSON, C. M. TRIPLETT, JR., AND THE BALTIMORE GASLIGHT COMPANY,
Defendants-Petitioners,
vs.
PERCIVAL D. LOWELL, FRANCIS W. DUNMORE, and DUBILIER CONDENSER CORPORATION,
Plaintiffs-Respondents.

No. 388

BRIEF FOR RESPONDENTS

CLIFTON V. EDWARDS,
GAYLORD LEE CLARK,
JOHN B. BRADY,
Counsel for Respondents.

INDEX.

BRIEF FOR RESPONDENTS.

	PAGE
I. Statement	1
II. The History of the Litigation	1
III. The Earlier Litigation in the Third Circuit	3
IV. History of the Invention and Litigation Seeking Possession Thereof	5
V. The Questions Presented by the Petition for Writ of Certiorari	7
Argument	8
Point I. There is Substantial Difference Between the Questions Presented in This Case and Those Presented in the Mantle Lamp Case	8
Point II. There was No Unreasonable Delay in the Instant Case and Both Courts Below Have So Found	9
Point III. The Disclaimers were Not Invalid, Nor Did They Admit Invalidity of the Claims in Suit	12
Point IV. The Instant Suit is Authorized by Statute and by Judicial Construction Thereof	14
Point V. The Circuit Court of Appeals was Right in Directing a New Trial by the District Judge	20
VI. Conclusion	23

APPENDIX A.

PAGE

I. Cases in the Supreme Court Prior to the Establishment of the Circuit Court of Appeals..... 24

II. Cases in the Supreme Court Where the Patent Was Held Invalid by the Circuit Court of Appeals in One Circuit, and Later Held Valid by the Circuit Court of Appeals in Another Circuit 24

III. Cases in Circuit Court of Appeals Where the Patent Was Held to Be Invalid by One Circuit Court of Appeals and Later Held to Be Valid by Another Circuit Court of Appeals (omitting cases which reached the Supreme Court)..... 29

Comment by Counsel 31

APPENDIX B.

Chronological Statement of Steps in Litigation..... 32

APPENDIX C.

1. The Utility of the Inventions and Commercial History 36

2. The Prior Commercial Broadcast Receivers..... 36

3. Commercial Development on Behalf of Lowell and Dunmore 37

4. Causes of Hum in Vacuum Tube Radio Receivers.. 41

5. Dunmore Patent No. 1,635,117..... 43
The Claims in Suit 48
The Petitioners' Infringing Amplifier..... 49
The Decision of the Circuit Court of Appeals for the Third Circuit with Respect to Patent 1,635,117 51

6. Lowell & Dunmore Patent 1,455,141..... 53
The Claims in Suit 56
Infringement of Patent 1,455,141..... 57
The Decisions of the Courts in Third Circuit with Respect to Patent 1,455,141..... 60

TABLE OF CASES.

Cases Cited in Respondents' Brief:

PAGE

Altoona Publix Theatres Corp. *v.* American Tri-Ergon Corp., 294 U. S. 477 ..... 13, 14
Barbed Wire Patent, 143 U. S. 275 17
Better Packages, Inc. *v.* Nashua Package Sealing Co., 6 Fed. Supp. 573; 74 Fed. (2d) 679 19
Carnegie Steel Co. *v.* Cambria Iron Co., 185 U. S. 403 12
Davis Sewing Machine Co. *v.* New Departure Mfg. Co., 217 Fed. 775 14
Diamond Rubber Co. *v.* Consolidated Rubber Tire Co., 220 U. S. 428 17
Dowagiac Mfg. Co. *v.* Minnesota Plow Co., 235 U. S. 641 19
Dubilier Condenser Corp. *v.* Radio Corp., 34 Fed. (2d) 450; 287 U. S. 648 4
Elevator Supplies Co. *v.* Graham & Norton Co., 44 Fed. (2d) 354 14
Ensten *v.* Simon Ascher & Co., 282 U. S. 445 ..... 11, 15
General Chemical Co. *v.* Standard Wholesale Phosphate and Acid Works, 77 Fed. (2d) 230 11
Hanover Star Milling Co. *v.* Metcalf, 240 U. S. 403. 19
Hoe & Co. *v.* Goss Printing Press Co., 31 Fed. (2d) 565 19
Mantle Lamp Co. of America *v.* Aluminum Products Co. No. 590 ..... 3, 7, 8, 9
Marconi Wireless Telegraph Co. *v.* DeForest Radio Telephone & Telegraph Co., 243 Fed. 560 13
Mast Foos & Co. *v.* Stover Mfg. Co., 177 U. S. 485.. 16
Minerals Separation Ltd. *v.* Butte & Superior Mining Co., 250 U. S. 336 ..... 11, 13
Montebeliano Y. Ramos *v.* La Compagnia General, 241 U. S. 455 9
Otis Elevator Co. *v.* Pacific Finance Corp., 68 Fed. (2d) 664 ..... 11, 20
Page Machinery Co. *v.* Dow-Jones & Co., 168 Fed. 703 18

PAGE

Radio Condenser Co. *v.* General Instrument Corp., 65 Fed. (2d) 458 ..... 11, 19
Radio Corp. *v.* Dubilier Condenser Corp., 59 Fed. (2d) 305 4
Sanitary Refrigerator Co. *v.* Winters, 280 U. S. 30 .. 16
Seiberling *v.* Thropp's Sons Co., 284 Fed. 746 13
United Chromium Inc. *v.* International Silver Co., 60 Fed. (2d) 913 13
United States *v.* Bell Telephone Co., 128 U. S. 315 .. 17
United States *v.* Carter, 217 U. S. 286 9
United States *v.* Dubilier Condenser Corp., 289 U. S. 178 ..... 5, 10
United States *v.* Dubilier Condenser Corp., 287 U. S. 588 6
Westinghouse *v.* Boyden Power Co., 170 U. S. 537 .. 13

Cases Cited in Appendix A:

Abercrombie & Fitch Co. *v.* Baldwin, 245 U. S. 198 .26, 31
Backstay Machine & Leather Co. *v.* Hamilton, 262 Fed. 411 30
Backstay Machine & Leather Co. *v.* Zenite Metal Co., 293 Fed. 23 31
Baldwin *v.* Abercrombie & Fitch Co., 228 Fed. 895 .. 27
Barbed Wire Patent, 143 U. S. 275 24
Bleser *v.* Baldwin, 199 Fed. 133 26
Bradford *v.* Expanded Metal Co., 146 Fed. 984 25
Brennan & Co. *v.* Dowagiac Mfg. Co., 162 Fed. 472 .. 26
Chain Belt Co. *v.* New York Scaffolding Co., 245 Fed. 747 28
Consolidated Rubber Tire Co. *v.* Diamond Rubber Co., 162 Fed. 892 25
Consolidated Rubber Tire Co. *v.* Firestone Tire & Rubber Co., 151 Fed. 237 25
Corona Co. *v.* Dovan Co., 276 U. S. 358 28
Crown Cork & Seal Co. *v.* Standard Stopper Co., 136 Fed. 841 30

PAGE

Diamond Meter Co. *v.* Westinghouse Elec. & Mfg. Co., 152 Fed. 704 30
Diamond Rubber Co. *v.* Consolidated Rubber Tire Co., 220 U. S. 428 ..... 25, 31
Dovan Chemical Co. *v.* Corona Cord Tire Co., 10 Fed. (2d) 598 28
Dovan Chemical Co. *v.* National Analine & Chemical Co., 292 Fed. 555 28
Dowagiac Mfg. Co. *v.* Minnesota Moline Plow Co., 235 U. S. 641; 183 Fed. 314 ..... 25, 26, 32
Ensten *v.* Ascher, 282 U. S. 445 32
Expanded Metal Co. *v.* Bradford, 214 U. S. 366 ..... 24, 25, 31
Expanded Metal Co. *v.* General Fireproofing Co., 157 Fed. 564; 164 Fed. 849 25
Forchheimer *v.* Franc, Strohmeyer, 20 Fed. (2d) 553 31
Franc-Strohmeyer & Cowan *v.* Arthur Siegman, 27 Fed. (2d) 785 31
Goodyear Tire & Rubber Co. *v.* Rubber Tire Wheel Co., 116 Fed. 363 25
Grier Bros. Co. *v.* Baldwin, 219 Fed. 735 26
Hanover Star Milling Co. *v.* Allen & Wheeler Co., 208 Fed. 513 26
Hanover Star Milling Co. *v.* Metcalf, 240 U. S. 403 ..... 26, 32
Imperial Bottle Cap & Machine Co. *v.* Crown Cork & Seal Co., 139 Fed. 312 30
John E. Thropp's Sons Co. *v.* Seiberling, 264 U. S. 320 28
Maitland *v.* Goetz Co., 86 Fed. 124 29
Maitland *v.* Gibson, 63 Fed. 840 29
McNeely *v.* Williames, 96 Fed. 978 29
Meccano Ltd. *v.* John Wanamaker, 253 U. S. 136; 250 Fed. 250; 250 Fed. 450 ..... 27, 31
Metcalf *v.* Hanover Star Milling Co., 204 Fed. 211 .. 26
Miner *v.* T. H. Symington Co., 229 Fed. 730 27
National Malleable Castings Co. *v.* T. H. Symington Co., 230 Fed. 821 27

PAGE

New York Scaffolding Co. *v.* Chain Belt Co., 254 U. S. 32 ..... 27, 31
New York Scaffolding Co. *v.* Liebel-Binney Construction Co, 243 Fed. 577 28
New York Scaffolding Co. *v.* Whitney, 224 Fed. 452 28
Pieper *v.* Electro Dental Co., 160 Fed. 930..... 30
Pieper *v.* S. S. White Dental Mfg. Co., 228 Fed. 30.. 30
Radio Corp. *v.* Radio Laboratories, 293 U S. 1; 66 Fed. (2d) 768..... 28
Railroad Supply Co. *v.* Elyria Iron Co., 244 U. S. 285; 213 Fed. 789..... 26, 31
Railroad Supplies Co. *v.* Hart Steel Co., 222 Fed. 261 26
Rubber Tire Wheel Co. *v.* Victor Rubber-Tire Co., 123 Fed. 85 25
Saranac Automatic Machine Corp. *v.* Wirebounds Patents Co., 282 U. S. 704..... 28, 31
Seiberling *v.* Firestone Tire & Rubber Co., 257 Fed. 74 28
Seiberling *v.* John E. Thropp's Sons Co., 284 Fed. 746 28
Simmons Co. *v.* Grier Bros. Co., 258 U. S. 82..... 27
Symington Co. *v.* National Malleable Castings Co., 250 U. S. 383 27
Thomson-Houston Elec. Co. *v.* Black River Traction Co., 135 Fed. 759..... 30
Thomson-Houston Elec. Co. *v.* Jeffrey Mfg. Co., 101 Fed. 121 30
Thomson-Houston Elec. Co. *v.* Union Ry. Co., 86 Fed. 636 30
Wagner *v.* Meccano Ltd., 246 Fed. 603 27
Washburn & Moen Mfg. Co. *v.* Beat 'Em All Barbed-Wire Co., 33 Fed 261..... 24
Washburn & Moen Mfg. Co. *v.* Fuchs, 16 Fed. 661.. 24
Washburn & Moen Mfg. Co. *v.* Haish, 4 Fed. 900.... 24
Wenborne-Karpen Dryer Co. *v.* Cutler Dry Kiln Co., 290 Fed. 625 31

PAGE

Wenborne-Karpen Dryer Co. *v.* Dort Motor Car Co., 14 Fed. (2d) 378 31
Westinghouse Elec. & Mfg. Co. *v.* Catskill Co., 121 Fed. 831 30
Westinghouse Elec. & Mfg. Co. *v.* Stanley Co., 133 Fed. 167 29
Williames *v.* Barnard, 41 Fed. 358 29
Wirebounds Patents Co. *v.* Gibbons Box Co., 25 Fed. (2d) 363 28
Wirebounds Patents Co. *v.* Saranac Automatic Mach. Corp., 37 Fed. (2d) 830 29

Cases Cited in Appendix C:

DeForest Radio Co. *v.* General Electric Co., 283 U. S. 420 41
Dubilier Condenser Corp. *v.* Radio Corp., 34 Fed. (2d) 450 ..... 51, 60
Radio Corp. *v.* Dubilier Condenser Corp., 59 Fed. (2d) 305 60
Radio Corp. *v.* Dubilier Condenser Corp., 59 Fed. (2d) 309 51
United States *v.* Dubilier Condenser Corp., 289 U. S. 178 43

Supreme Court of the United States

October Term—1935.

A. G. TRIPLETT, R. M. TRIPLETT, A. NELSON, C. M. TRIPLETT, JR., AND THE BALTIMORE GASLIGHT COMPANY, *Defendants-Petitioners,* vs. PERCIVAL D. LOWELL, FRANCIS W. DUNMORE, AND DUBILIER CONDENSER CORPORATION, *Plaintiffs-Respondents.*	No. 388

BRIEF FOR RESPONDENTS.

I. Statement.

This case is before this Court upon writ of certiorari to the Circuit Court of Appeals for the Fourth Circuit, to review a decree (Vol. I, p. 433) of that Court entered June 4, 1935, reversing a decree of the United States District Court for the District of Maryland entered July 20, 1934 (Vol. I, p. 276) in a patent infringement suit. The decree of the District Court directed the dismissal of the bill of compaint as to two of the letters patent in suit for invalidity, the Court adopting and following the reasoning of an earlier decision with respect to each of said patents by the Circuit Court of Appeals for the Third Circuit.

II. The History of the Litigation.

On August 17, 1933, respondents as plaintiffs filed the present suit in the United States District Court for the

District of Maryland, against the present defendants, charging infringement of three United States Letters Patent as follows:

No. 1,635,117 granted July 5, 1927, to Francis W. Dunmore; filed February 27, 1922.
No. 1,455,141 granted May 15, 1923, to Lowell & Dunmore; filed March 27, 1922.
No. 1,606,212 granted November 9, 1926, to Dunmore & Lowell; filed March 21, 1922.

At the opening of the trial in the District Court, the petitioners (defendants below) filed a motion (Vol. I, p. 19) to dismiss the bill of complaint as to said two patents (1,635,117 and 1,455,141), basing the motion upon the ground that plaintiffs had *unreasonably* delayed the filing of disclaimers with respect to said patents after decisions of the Circuit Court of Appeals for the Third Circuit holding certain claims of said patents invalid. Respondents filed answering affidavits (Vol. I, p. 24) setting forth the reasons for the delay and the motion was denied (Vol. I, pp. 46, 47).

Thereupon (Vol. I, pp. 48, 49) counsel for defendants-appellees was granted leave to file an amendment to the answer setting up invalidity of the patents by reason of unreasonable delay in filing disclaimer, as well as *inadequacy* of the disclaimer.

The trial then proceeded (Vol. I. p. 49) and the respondents proffered evidence which they proposed to introduce in support of the two patents held invalid in the Third Circuit (Vol. I, p. 57). The proffered evidence was excluded and respondents allowed an exception (Vol. I, pp. 128, 129). The proffered evidence was duly marked under the provisions of Equity Rule 46 (Vol. I, p. 129).

After due consideration the Court filed an opinion (Vol. I, p. 263) dismissing the bill of complaint as to the two patents, Nos. 1,635,117 and 1,455,141, upholding the validity of the third patent, No. 1,606,212, and directing an injunction and accounting with respect thereto.

From the decree (Vol. I, p. 276) entered on July 20, 1934 by the District Court, respondents appealed (Vol. I, p. 278) from such portion thereof as directed the dismissal of the bill of complaint with respect to patents Nos. 1,455,141 and 1,635,117, and petitioners appealed (Vol. I, p. 280) from those portions which upheld the validity of patent 1,606,212, found infringement thereof, and directed an injunction and accounting with respect thereto.

The Circuit Court of Appeals reversed the decree of the District Court insofar as the decree dismissed the bill with respect to patent 1,455,141 and 1,635,117, remanded the case for trial, and meanwhile withheld judgment with respect to the third patent 1,606,212 (Vol. I, p. 432).

Petitioners on August 21, 1935 applied to this Court for a writ of certiorari upon the ground that respondents had unreasonably delayed the filing of disclaimers as to the first two patents. That petition was denied by this Court on October 14, 1935.

On November 25, 1935, a petition for rehearing was presented representing that the issues in this case are so closely similar to those presented in the case of *The Mantle Lamp Company of America* v. *Aluminum Products Company*, certified to this Court by the Circuit Court of Appeals for the Seventh Circuit, that this case may be disposed of at the same time. Such petition was granted December 9, 1935. The order granting the writ assigned the case for argument immediately following No. 590, *The Mantle Lamp Company of America* v. *Aluminum Products Company*.

III. The Earlier Litigation in the Third Circuit.

Prior to the present litigation, the respondents had, on September 20, 1927, filed three separate bills of complaint in the United States District Court for the District of Delaware against the Radio Corporation charging infringement of each of said three letters patent separately. Because of the pendency of certain interference contests in the

Patent Office, hereinafter referred to, the suit was limited to certain claims not involved in the interference.

After a protracted trial the District Court, Judge Hugh M. Morris holding the Court, on August 12, 1929 (34 Fed. (2d), 450) held claim 9 of patent 1,635,117 covering the earliest invention, and claims 3 and 14 of patent 1,455,141 valid and infringed; the third patent was held not infringed. (*Dubilier Condenser Corporation* v. *Radio Corporation,* 34 Fed. (2d), 450).

The Radio Corporation appealed to the Circuit Court of Appeals for the Third Circuit from so much of the decree of Judge Morris as held the two patents valid and infringed; plaintiffs took no appeal.

The Circuit Court of Appeals, in an opinion by Judge Woolley, (*Radio Corporation* v. *Dubilier Condenser Corporation,* 59 Fed. (2d) 305, 309) reversed the decree of the District Court, holding the said claims there in suit to be invalid.

An order consolidating the cases for purposes of appeal having been made, and a petition for rehearing having been filed in the Circuit Court of Appeals with respect to patent 1,635,117, it was assumed that appellants' time to apply for writs of certiorari in both cases ran from the date of the denial of the petition for rehearing. This Court, however, on October 25, 1932, denied the petition with respect to patent 1,455,141 because not applied for in time, and denied the other petition without stating the reason (287 U. S. 648 and 650).

On July 8, 1933 respondents filed disclaimers. These disclaimers did not cancel or change any of the claims of the patents, but did in effect assert that respondents' interpretation of the term "means" in the claims was not the interpretation given thereto by the Circuit Court of Appeals for the Third Circuit, but was limited to the devices shown and described in the patent.

IV. History of the Invention and Litigation Seeking Possession Thereof.

The inventions in controversy, made in 1921 under circumstances set forth in *United States* v. *Dubilier Condenser Corp.*, 289 U. S. 178, made possible the operation of radio broadcast receiving sets from the ordinary household alternating lighting current, instead of from batteries as had been the previous universal practice.

The inventions were published, embodied in full-sized demonstration sets, and submitted to the leading and other receiving set manufacturers, who were urged, unsuccessfully, to become licensees and to place the inventions on the market. After approximately three years of unsuccessful efforts to induce set makers to put the inventions on the market agreements were made with the respondent Dubilier Condenser Corporation (Vol. I, pp. 371-380) which expended several hundred thousand dollars in commercial development (Vol. I, p. 231); and license agreements were made with several manufacturers. Up to and including 1927 the license fees amounted to $28,000 (Vol. I, p. 337).

About this time four interference contests were instituted in the Patent Office against patent 1,455,141 by rival inventors, some backed by powerful companies, seeking to wrest the invention from respondents. These rival contestants were Michael I. Pupin whose application was owned by the Westinghouse Electric & Manufacturing Company; Robert D. Duncan, Jr., whose application was owned by Wired Radio, Inc., a subsidiary of the North American Company; and Albert S. Blatterman (Vol. I, p. 24).

In the fall of 1927 the Radio Corporation of America and its associated companies manufactured and put upon the market large quantities of infringing alternating current operated receiving sets, with the result of substantially destroying the business built up under the patents by the Dubilier Condenser Corporation (Vol. I, p. 231), and ending the collection of royalties.

(34 Fed 2d 450)

Shortly after the decision of Judge Morris upholding the validity of the patents and finding infringement thereof, the United States on or about April 22, 1930 (Vol. I, p. 26) filed suits against respondents asserting ownership of the inventions and seeking to acquire title to each of the three patents (Vol. II, pp. 475, 536). Two of these suits were against respondent Lowell in the Eastern District of New York (Vol. II, pp. 475, 482); three against respondent Dunmore in the District of Columbia (Vol. II, pp. 489, 496, 503); three against respondent Dubilier Condenser Corporation in the District of Delaware (Vol. II, pp. 509, 516, 523; and one against the Morkrum Company, a licensee, in the District of Maine (Vol. II, p. 530).

The suit of the government against the respondent Dubilier Condenser Corporation to acquire title to the patents, was tried and decided by the District Court and upon appeal was decided by the Circuit Court of Appeals on May 24, 1932. On October 17, 1932 (287 U. S. 588) this Court granted a writ of certiorari in the government case to review the question of title, and that case was pending and undecided in this Court at the time of the denial of the writs of certiorari in the patent cases on October 25, 1932.

Also at the time of the denial of the petitions for certiorari in the patent cases the several interference contests had progressed through the Patent Office tribunals and had been decided in favor or respondents, but the unsuccessful rival contenders for the inventions, the Wired Radio, Inc. and Robert D. Duncan, Jr., in one case, and Albert S. Blatterman in another, had filed suits against respondents in the Supreme Court of the District of Columbia under section 4915, seeking a review of the question of priority and these suits were awaiting trial.

The bills of complaint in the government cases not only demanded title to the patents but also asked that respondents be treated as trustees and be made to account for all receipts from the patents.

This Court decided the title question in the suit against respondent Dubilier Condenser Corporation on April 10,

1933 (289 U. S. 178), but the suits against the respondents, Lowell and Dunmore, however, were still pending and the defendants were advised by counsel for the government that the Department of Justice had under consideration bringing these suits on for trial (Vol. I, p. 27).

The last of the title suits were dismissed on June 8, 1933 and July 3, 1933, respectively. (Vol. II, pp. 538, 539, 541, 546, 548).

On July 8, 1933 respondents filed the disclaimers hereinbefore referred to.

V. The Questions Presented by the Petition for Writ of Certiorari.

The present petition was granted December 9, 1935 (p. 4, par. 10) and is rested upon the ground that

> "The issues on the merits involved in petitioners' case are so closely similar to the questions involved in the case of "*The Mantle Lamp Company of American* v. *Aluminum Products Company*, which has been certified to this Court by the Court of Appeals for the Seventh Circuit, that the case may be disposed of on its merits at the same time." (Italics by counsel.)

Petitioners' brief refers (p. 7) only to the first of the questions certified in the *Mantle Lamp Company* case, i.e., whether the owner of a patent, some of the claims of which have been held invalid by the Circuit Court of Appeals in one circuit, may maintain a suit afterward brought "in the same judicial circuit" and against a different defendant when the owner "wholly failed and omitted to file any disclaimer" and a "reasonable time had elapsed" therefor.

The dismissal by the District Court in the case at bar was not based upon unreasonable or other delay in filing disclaimers, but rather upon the ground that the disclaimers did not materially alter the patents from what they

were when considered by the Circuit Court of Appeals for the Third Circuit and that even considering the evidence proffered by respondents the same conclusion was reached by the District Court as was reached by the Circuit Court of Appeals for the Third Circuit (See opinion, Vol. I, pp. 265, 266).

Furthermore the courts below found that under the exceptional circumstances in this case there was no enreasonable delay in filing disclaimers.

The record therefore presents the following questions:

1. Are the issues in this case so closely similar to those involved in the *Mantle Lamp Company* case as to be determinative of this case?

2. Is a patentee barred from any further suit after the first decision of a Circuit Court of Appeals holding the patent invalid?

3. Was the decision of the Circuit Court of Appeals for the Fourth Circuit in error in holding that the District Court should have received the evidence proffered on behalf of the respondents in this case?

ARGUMENT.

Point I.

There Is Substantial Difference Between the Questions Presented in This Case and Those Presented in the Mantle Lamp Case.

The case at bar differs from the *Mantle Lamp* case in two important particulars. (1) The instant suit is not brought in the same ~~district~~ CIRCUIT in which the previous suit was brought. (2) Both Courts below held in the case at bar that respondents were not guilty of unreasonable delay in filing disclaimers.

(1) In the *Mantle Lamp* case after the decision of the Circuit Court of Appeals for the Seventh Circuit holding

certain claims invalid, suit was brought in the Sixth Circuit. No question seems to have been raised in the Sixth Circuit, or is presented by the questions certified to this court by the Circuit Court of Appeals for the Seventh Circuit, as to the propriety of the Circuit Court of Appeals for the Sixth Circuit entertaining the bill of complaint and upholding the validity of the patent. The questions certified to this Court relate only to the propriety of asking the Circuit Court of Appeals for the Seventh Circuit to review its own previous decision.

(2) The first question certified in the *Mantle Lamp* case specifies that "a reasonable time had elapsed for filing such disclaimer." This seems to imply that mere length of time alone is determinative. If that be the true criterion regardless of circumstances, the case at bar differs materially from the *Mantle Lamp* case in that in that case apparently there was a delay of some five or six years, whereas the utmost that is charged against respondents is eight months and thirteen days (Petitioners' brief, p. 30).

Point II.

The Filing of a Disclaimer Was Not Unreasonably Neglected or Delayed.

Both Courts below so found.* The question of unreasonable delay is a question for the Court upon the facts. As the statute fixes no period of time as "unreasonable" that word has been construed by the Courts to be a delay "unreasonable in view of all the circumstances". While petitioner admits in its brief (pp. 16 and 42) that exceptional or extenuating circumstances may account for and excuse delay in filing a disclaimer, it is not without significance that petitioner scrupulously avoids in its brief a *single reference* to the *exceptional circumstances* in the present case.

*Vol. I, pp. 45-47; Vol. I, p. 427.
Where both Courts below concur in findings of fact and conclusions of law their judgment should be affirmed unless error clearly appears. *Montebeliano Y. Ramos* v. *La Compagnia General*, 241 U. S., 455; *United States* v. *Carter*, 217 U. S., 286, at p. 319.

At the time of the denial of their petitions for certiorari by the Court October 25, 1932 the Government title suit against Dubilier Condenser Corporation before this Court was pending undecided. There was a grave question, as indicated by the dissenting opinions of this Court (289 U. S. 178, 209) as to whether respondents had the right to file disclaimers. If the patentees were held not entitled to their inventions and not to have a good title to the patents, it may well be that they would still be held accountable as Trustees to the Government for any income therefrom during the period they held title and any disclaimer filed by them be also held ineffective as to any rights disclaimed. Again, wholly aside from their legal rights or duties, good faith required that the patentees make no disposition of or impair rights granted by the patents during the pendency of the title suits.

The decision of this Court in the title suits against Dubilier Condenser Corporation was rendered April 10, 1933. But for three months thereafter respondents were still uncertain of their title because Government counsel expressed an intention on their part to bring to trial one or more of the other title suits pending against the inventors in New York and in the District of Columbia. It was not until June 8, 1933 and July 3, 1933 that the last of the title suits brought by the Government were dismissed.

July 8, 1933, only seventy-nine days* after the decision of this Court on the question of title to the patents, and five days after the dismissal of the last of the title suits against

*In *Minerals Separation Ltd. v. Butte & Superior Mining Co.*, 250 U. S. 336, 354, a delay of three months after a decision of this Court invalidating a certain claim was held not to be unreasonable in view of the fact that the patentees resided in a foreign country.

In *Ensten v. Simon Ascher & Co.*, 282 U. S. 445, the period condemned was twenty-three months.

In *Radio Condenser Co. v. General Instrument Corp.*, 65 Fed. (2d) 458, the period condemned was more than three years.

In *Otis Elevator Co. v. Pacific Finance Corp.*, 68 Fed. (2d) 664, the period condemned was one year and two months.

In *General Chemical Co. v. Standard Wholesale Phosphate and Acid Works* (C.C.A. Fourth Circuit) 77 Fed. (2d) 230, a delay of thirty-eight days was held not unreasonable. Certiorari denied October 14, 1935, No. 264; rehearing denied December 23, 1935.

the inventors, these respondents within the letter and the spirit of the disclaimer statute gave notice to the public, both that they did not accept or acquiesce in the decision of the Circuit Court of Appeals for the Third Circuit and that they did not interpret the term "means" as claiming the broad subject matter attributed to them by that Court.

A chronological statement of the important steps in this protracted litigation, annexed as Appendix "B" gives a bird's eye view of the facts facing the patentees. This statement clearly shows that after the bringing of the title suit by the Government the *question of title* was given priority of consideration by the courts, and rightly so, over the patent litigation.

During this period also the interference contests further beclouded the situation as to whether any of the several alleged inventors was prior to these patentees. Since the interpretation of the term "means" adopted by the Circuit Court of Appeals in holding the claims there in suit invalid, if applied to the other claims of the patents would make them invalid also, any disclaimer cancelling any of the claims would in all probability have led to decrees awarding the claims to one or more of the other contestants who would have been free to start litigation thereon anew. Hence the public would have gained nothing by a disclaimer which canceled the claims.

Furthermore, in view of the complexity of the subject matter, more than ordinary time was required to study the electrical circuits of infringing apparatus, and to procure legal proof of infringement.

We submit that the Courts below were fully justified in finding that under the circumstances respondents proceeded with reasonable promptness particularly in view of the burden and uncertainty of the title litigation, the interference contests, the limited resources of the respondents and the necessity of finding and examining a provable instance of infringement in the new district and giving suitable notice to the infringer.

Point III.

The Disclaimers Were Not Invalid, Nor Did They Admit Invalidity of the Claims in Suit.

The disclaimers did not in fact cancel any claims, change the wording thereof or the wording of the specification, nor did they subtract or add any elements, or seek to give any meaning to the claims other than, as stated in the opinion of the Circuit Court of Appeals for the Fourth Circuit (77 Fed. (2d) 556, 557; Vol. I, p. 419):

> "to ensure that the broad language of the claims would be given more definite meaning by reference to the disclosures of the patent so as to cover what is there described, or the equivalent thereof, in accordance with the well-established rule that in interpreting the language of a claim, the words are not to be taken literally but in the sense in which they were used by the inventor as disclosed in his specification. Elevator Supplies Co. v. Graham & Norton Co. (C.C.A. 44 F. (2d) 354; Westinghouse v. Boyden Power-Brake Co., 170 U. S. 537, 568, 569, 18 S. Ct. 707, 42 L. Ed. 1136."

Disclaimers of this type have long been recognized as proper. One prominent example is the disclaimer involved in *Carnegie Steel Co.* v. *Cambria Iron Co.*, 185 U. S. 403, 435, where the claim was not changed but an explanatory change was made in the specification, and this Court said:

> "In the case under consideration the disclaimer was not of a claim but of certain statements in the specification, which if retained might be construed to have the effect of illegally broadening the second claim. The first statement disclaimed was that the invention might be practiced by *merely* receiving a number of small portions of metal taken from different ladles, the mixing being performed merely by the act of pouring into the charging ladle. The use of the word 'merely' ignored the steps embodied in the second claim, where the mixing is not performed by merely pouring together the several charges into a ladle, but by maintaining a permanent

quantity of metal in the reservoir, to which charges were alternately added and from which they were withdrawn. The other clauses were intended to disclaim the casting of the metal into pigs. We think there is no force in the criticism that a disclaimer may not extend to a part of the specification, as well as to a distinct claim. *Hurlbut* v. *Schillinger,* 130 U. S. 456; *Schillinger* v. *Gunther,* 17 Blatch. 66; *Schwartzwalder* v. *New York Filter Company,* 26 U. S. App. 547. Had the purpose of the disclaimer been to reform or alter the description of the intervention, or convert the claim from one thing into something else, it might have been objectionable, as patents can only be amended for mistakes of this kind by a reissue. But the disclaimer in this case appears to have been made to obviate an ambiguity in the specification, and with no idea of obtaining the benefit of a reissue. If the clauses had the effect of broadening the patent the disclaimer removes the objection. If they did not, the disclaimer could do no harm, and cannot be made the subject of criticism."

The disclaimer in the *Carnegie* case is referred to, apparently with approval, in the decision in the *Altoona Publix Theatres* case. (See footnote 294 U. S. 490).

See also disclaimers in *Minerals Separation, Ltd.* v. *Butte & Superior Co.,* 250 U. S. 336, 354; *Marconi Wireless Telegraph Co.* v. *DeForest Radio Telephone & Telegraph Co.,* 243 Fed. 560, 565; *United Chromium Inc.* v. *International Silver Co.,* 60 Fed. (2d) 913, 914; and *Seiberling* v. *Thropp's Sons Co.,* 284 Fed. 746, 756, 757, all of which are referred to, apparently with approval, in the above cited footnote in the *Altoona Publix Theatres* case.

In the case at bar the disclaimers merely assert a *narrower* interpretation of the claims than that given to them by the Circuit Court of Appeals for the Third Circuit, and the patentees stand upon their right to have the term "means" interpreted, as by law they are entitled to have it interpreted, i. e., to be the same, or substantially the same as the means shown and described in the specifications. *Westinghouse* v. *Boyden Power Co.,* 170 U. S. 537, 568, 569;

Elevator Supplies Co. v. *Graham & Norton Co.*, 44 Fed. (2d) 354; *Davis Sewing Machine Co.* v. *New Departure Mfg. Co.*, 217 Fed., 775 (C. C. A. 6th Cir.).

Nor did the disclaimers admit invalidity of any claims. In *Altoona Publix Theatres Corp.* v. *American Tri-Ergon Corp., et al.*, 294 U. S. 477, cited by petitioners, this Court held that no invention was involved in employing a flywheel to impart uniform motion to a motion picture film (p. 483). One of the claims, claim 13 called for an apparatus "comprising a photoelectric cell, means for imparting to the film a rapid and uniform motion longitudinally of the film past said cell, * * *."

The patent owners disclaimed the combination of the claim "except *wherein a flywheel is operatively connected* with the film through means which imparts uniformity of motion of the flywheel to the film." This clearly was adding a new element, i. e., the flywheel, to the "means for imparting" etc. It was not seeking interpretation of the claim as it stood and since this Court had held that no invention was involved in the apparatus without the flywheel (p. 483) nor in the addition of a flywheel (p. 483), nothing was left for the patentee to claim.

Point IV.

The Instant Suit Is Authorized by Statute and by Judicial Construction Thereof.

No case has been cited by petitioner denying the right of a patentee, defeated in the Circuit Court of Appeals for one circuit, and who has not acquiesced in that decision and who proceeds with reasonable diligence under the circumstances, to sue a different defendant in another circuit and there seek a contrary decision.

Nor has any decision been cited to the effect that upon the first decision against the validity of some or all of the claims of a patent the patentee must forthwith disclaim himself out of Court so far as any further proceedings elsewhere are concerned.

We respectfully submit that the first question certified to this Court by the Circuit Court of Appeals for the Seventh Circuit overlooks entirely the law as laid down by this Court in *Ensten* v. *Simon Ascher & Co.*, 282 U. S. 445, and also overlooks the fundamental character of letters patent for an invention.

(1) In *Ensten* v. *Simon Ascher & Co.*, 282 U. S. 445, this Court laid down no rule fixing the number of days or months within which a patentee must file a disclaimer, nor did it rule that in every circumstance a disclaimer must be filed. On the contrary it was made clear that a patentee must act "with such promptness *as the circumstances permit*" and that two courses are open to him, i.e., either *to vindicate his position,* or file a disclaimer. This Court said (p. 455):

> "When a competent court has declared his pretensions without sufficient foundation, we think good faith and the spirit of the enactment demand that he act with such promptness as the circumstances permit either *to vindicate his position* or to relieve the public from further evil effects of his false assertion." (Emphasis by counsel.)

So far from fixing an exact time limit, this Court said (p. 453):

> "The question of unreasonable delay is a question for the court, upon the facts as found either by its own investigation or the verdict of a jury."

In the *Ensten* case the patentee's claim had been held invalid by a decree of a District Court, *from which no appeal was taken.* The patentee then (p. 455)

> "continued to hold himself out as possessor of the sole right to 'make, use and vend' under the rejected claim for *nearly* **two years.** *Then he abandoned it.*" (Emphasis by counsel.)

Thus the patentee acquiesced in the holding of invalidity and then held the claim for nearly two years before he abandoned it.

Nor, we submit is anything found in the *Ensten* case indicating any departure from the established rule that in the absence of estoppel, and absence of unreasonable delay the decision of one Circuit Court of Appeals has only the weight of comity in another circuit. *Mast Foos & Co.* v. *Stover Mfg. Co.*, 177 U. S. 485; *Sanitary Refrigerator Co.* v. *Winters*, 280 U. S. 30.

Cases following this long established rule were cited in the footnote to the opinion of the Circuit Court of Appeals for the Fourth Circuit (Vol. I, p. 429) and are listed hereinafter in Appendix A.*

Petitioners' brief (pp. -6, 17) and again in the appendix (p. 42) criticizes the accuracy of the statements in the footnote of the opinion. Only three minor misstatements are pointed out; these are identified in our Appendix A. Petitioners' criticisms in the main merely point out that in some of the cases cited the second suit in which the patent was held to be valid was copending at the time the patent was held to be invalid in the earlier case, or that at the time one Court first held the patent to be invalid there was outstanding an earlier decision holding the patent valid.

By urging these distinctions petitioners are in effect admitting that disclaimers are not required if the patentee is vindicating his position by the mere pendency of another suit.

(2) Petitioners' argument (p. 11) that once there has been a finding of invalidity, there is no reason why the patentee should again be allowed to assert validity overlooks the basic nature of the patent right and the decree of the Court in an infringement suit.

The patent right is a grant by the government, issued after compliance with statutory requirements. The decree of the Court in an infringement suit does not decree *cancellation* of that grant; it merely holds that the grant was invalid as between the patentee and the infringer. The effect is not at all the same as though there had been a de-

*The alleged errors are considered specifically in Appendix A.

cree of cancellation. The patentee is still left with his grant, and the fact that in the opinion of one Court the grant is invalid does not bar another Court from holding that the grant is valid.

In *U. S.* v. *Bell Telephone Co.*, 128 U. S. 315, 372 this Court pointed out:

> "In the first place, the right given to the infringer to make this defense is a right given to him personally, and to him alone, and the effect of a successful defense of this character by one infringer is simply to establish the fact that, as between him and the patentee, no right of action exists for the reasons set up in such defense. But the patentee is not prevented by any such decision from suing a hundred other infringers, if so many there be, and putting each of them to an expensive defense, in which they all, or some of them may be defeated and compelled to pay because they are not in possession of the evidence on which the other infringer succeeded in establishing his defense. On the other hand, the suit of the government, if successful, declares the patent void, sets it aside as of no force, vacates it or recalls it, and puts an end to all suits which the patentee can bring against anybody. It opens to the entire world the use of the invention or discovery in regard to which the patentee had asserted a monopoly."

Though "the patentee is not prevented by any such decision from suing a hundred other infringers," the expense and other considerations impose a practical limitation. It is a significant thing that the industry of counsel has only succeeded in finding two outstanding cases in which the patentee had the persistence to bring a third action after two different courts had held the patent invalid, i. e., *The Barbed Wire Patent*, 143 U. S. 275, and *Diamond Rubber Co.* v. *Consolidated Rubber Tire Co.*, 220 U. S. 428.

Since respondents were not guilty of unreasonable delay in making their position known and proceeding to vindicate their position, the question here resolves itself into the simple question of whether one whose patent in the first

litigation thereon is upheld by the District Court and then held invalid by the Circuit Court of Appeals, is obliged to file a disclaimer and thereby end all further proceedings thereon; thus taking away the right, heretofore universally recognized, to seek a contrary result in another circuit against another defendant, and thereby afford an opportunity for review by this Court by reason of contrary decisions in two different courts.

One of the purposes of the Act of 1891 (26 Stat. p. 826—31 Stat. p. 660) establishing the several Circuit Courts of Appeals was to permit this very thing, and, we submit, with sound reason.

The object of the Patent laws is to encourage invention and nothing in the disclaimer statutes, which are remedial statutes, indicates any intention of Congress to permit a valuable patent to be destroyed merely because in one case the inventor may be unsuccessful from causes wholly unrelated to the merits of his case, for example, failure to get his witnesses together, or misapprehension of a fact by the court, or the opinion of one tribunal only.

In *Page Machinery Co.* v. *Dow-Jones & Co.*, 168 Fed. 703, the Circuit Court of Appeals for the Second Circuit, in disapproving the then prevailing practice of requiring a disclaimer as a condition for appeal where the District Court had held one or more claims invalid, pointed out the injustice of requiring the inventor to accept the opinion of a single judge. The same reason exists where the decision is by a single court of appeals, especially where, as here, the District Court had held the patents to be valid.

Moreover, our patent system is kept alive and prevented from falling into a narrow or sectionalized interpretation of the patent law, by receiving the opinions of district judges in all parts of the country. Divergent views in the same circuit are harmonized by the Circuit Court of Appeals in that circuit, and divergent views between different Circuit Courts of Appeals harmonized by this Court. The surprising thing about the system is not that divergent

views arise between different Circuit Courts of Appeal, but rather that the number of cases in which such divergence of opinion exists is such a small percentage of the large number of patent cases heard every year by the various Circuit Courts of Appeals.

It would be manifestly unjust to exclude patentees from the right possessed by other litigants to sue another defendant in a second case and therein make a more complete showing, for example as in *Dowagiac Mfg. Co.* v. *Minnesota Plow Co.*, 235 U. S., 641; *Hanover Star Milling Co.* v. *Metcalf*, 240 U. S., 403.

The case most heavily relied upon by petitioners appears to be *R. Hoe & Co.* v. *Goss Printing Press Co.*, 31 Fed. (2d) 565. In that case the Circuit Court of Appeals for the second Circuit merely held that if plaintiff there desired to proceed further *in that case*, it must disclaim within thirty days. No question arose as to the right of the patentee to proceed elsewhere without accepting the decision of that Court and nothing in the Court's opinion negatived the right to do so. By inference the decision recognized the right of the plaintiff to abandon further proceedings in that case and proceed elsewhere since it gave plaintiff thirty days in which to decide.

In *Radio Condenser Co.* v. *General Instrument Co.*, 65 Fed. (2d) 458, the District Court held that a delay of approximately FIVE YEARS (April 17, 1928 to February 26, 1932, p. 459) after ACQUIESCING in a decision of the Patent Office that the patentee was not the inventor was unreasonable. Apparently the case was not appealed to the Circuit Court of Appeals. In any event no such delay is involved here.

In *Better Packages Inc.* v. *Nashua Package Sealing Co.*, 6 Fed. Supp. 573 and 74 Fed. (2d) 679 on appeal, where previously a claim had been held to be invalid the plaintiff had *acquiesced in the adverse ruling by taking no appeal.* After eighty-three days a new suit was brought *in the same court.* Apparently no excuse was given as to why appeal

was not taken in the first case. The District Court held that the delay was unreasonable. The circumstances, other than above stated, do not appear.

In the Ninth Circuit in *Otis Elevator Co.* v. *Pacific Finance Corp.*, 68 Fed. (2d) 664, a special master had found a claim to be invalid for failure to comply with Section 4888 of the Revised Statutes, the claim being so broad as to be ambiguous. *No exception was taken to this finding.* The Circuit Court of Appeals held that:

> "The specific question whether or not a claim invalid only for indefiniteness invalidates the entire patent appears to be an open one."

But the Court also held that the claim there involved covered more than that of which the patentee was the original or first inventor and hence that a disclaimer *was* required. No other excuse was offered by the plaintiff for its delay of FOURTEEN MONTHS (p. 671) and the ruling of the Court was that under the circumstances of that case the delay of fourteen months was too long.

Thus in all of the cases cited by petitioner the patentee had *acquiesced* in a finding of invalidity and then waited for various periods of time deemed by the Court to be unreasonable under the circumstances of that case, before disclaiming or seeking to vindicate his position.

There was no acquiescence by respondents in the case at bar.

Point V.

The Circuit Court of Appeals Was Right in Directing a New Trial by the District Judge.

The decree of the District Court which was reversed by the Circuit Court of Appeals in this case was not based upon delay in filing a disclaimer. The basis was that the disclaimers did not materially alter the claims and that the case stood on substantially the same ground as the case in

the Third Circuit and that therefore the Court would follow the Circuit Court of Appeals for the Third Circuit and hold the two patents invalid.

This ruling therefore in effect held (Vol. I, p. 263) that even assuming the truth of all the facts asserted in the plaintiffs' proffered proofs, the patents would be invalid.

The inventions are described in detail in Appendix C.

The District Court, Judge Coleman, pointed out (Vol. I, pp. 264, 265) by quoting from the opinion of the Circuit Court of Appeals for the Third Circuit that that Court thought with respect to patent 1,455,141 that if Lowell and Dunmore

> "had invented this apparatus and all its elements, their invention unquestionably would have been basic; it would have been more than that; it would have been stupendous, for it would have covered the major portion of the practical radio art as it stands today."

And that as to the means employed for carrying out the invention, the Circuit Court of Appeals had held:

> "Therefore, in the final analysis, the claimed invention *consists in applying curbed alternating current to the detector section and the audio frequency amplifier section and also to the radio frequency amplifier section in the same way that it had previously been applied to the last-named section.* Is this invention?" (Emphasis by counsel.)

And with respect to patent 1,635,117, that the Circuit Court of Appeals had said (pp. 266, 267):

> "The invention, as the plaintiffs state in a few words, consists of means for imparting positive potential to the plate and negative potential to the grid electrodes of a vacuum tube by low frequency alternating current. They say this was new and very useful and therefore amounted to invention, and that Dunmore was the first in the art to conceive and apply it."

As to the means for carrying out the invention, the Circuit Court of Appeals had said (Vol. I, p. 266):

> "But Dunmore says he did more than (b) substitute electric power of one kind for electric power of another kind, defined by their respective sources, in that he (c) rectified or converted the substituted ineffective alternating current into workable direct current. This certainly he did, and if he were the first to do it, or if he did it in a new way it might be invention."

And further that Dunmore did no more than use rectified and filtered current from a Hull filter, thus making the tube operate as though it received direct current from a battery.

Thus it is clear that the Circuit Court of Appeals for the Third Circuit thought that Lowell and Dunmore had done no more than apply "curbed" alternating current to the several sections of the instrument, and that Dunmore had done no more than apply rectified current to the plate and grid circuits of the amplifier, and that this so-called curbed current was the same at battery current so far as concerned its effect upon the instrument.

The issues in the litigation in the Third Circuit therefore were two in number, i.e.:

(1) Did the "means" for eliminating hum in the patents mean merely the use of a so-called Hull filter for changing alternating current to direct current, thereby making the tubes and the receiving set operate the same as in direct current receiving sets, or the mere duplication of a "mid-point" connection?

(2) Was current from the Hull filter the equivalent of direct current from a battery and did a mid point connection produce the same effect as battery current?

The latter questions of fact were the basis and foundation of both opinions of the Circuit Court of Appeals for the Third Circuit. If, in point of fact, an old and well known device transformed alternating current into direct current, the full equivalent of battery current, so that the

set operated indifferently upon current from that device or from a battery, it is easy to see that no invention would be involved.

But if, in point of fact, the current from such earlier device was not the equivalent of battery current and was itself fluctuating to such an extent as to produce upon the grids of the tubes a rising and falling voltage which would be multiplied in the tubes and thereby caused to drown out or distort the signal, a far different situation would exist, a situation, indeed, which the Circuit Court of Appeals for the Third Circuit substantially admitted would involve i vention of a high order to overcome.

The proofs proffered to the District Court consisted of testimony and demonstrations showing that no filtering device, short of one so elaborate and expensive in character as to render its use prohibitive in a radio broadcast receiver, could transform the household alternating current into the equivalent of battery current.

Upon the proffer and rejection of such proof it is to be assumed for the purposes of the hearing in the Circuit Court of Appeals and this Court that the facts are as asserted in the proffered proofs.

VI.

Conclusion.

It is submitted that the decree of the Circuit Court of Appeals for the Fourth Circuit was right in reversing said decree of the District Court.

Respectfully submitted,

CLIFTON V. EDWARDS,
GAYLORD LEE CLARK,
JOHN B. BRADY,

Counsel for Respondents.

APPENDIX A.

Cases in Which Patents or Trade-Marks Held Invalid in One Circuit Subsequently Have Been Held Valid in Other Circuits.

(Including corrections as indicated in footnotes.)

(Except as noted in footnotes the list is as given in the opinion of the Circuit Court of Appeals, Vol. I, p. 429.)

I.

Cases in the Supreme Court Prior to the Establishment of the Circuit Court of Appeals:

The Barbed Wire Patent, 143 U. S. 275, although no diversity of opinion existed in the lower courts, indicates the practice prior to the act establishing the Circuit Courts of Appeal.

The original patent had been held to be invalid by the Circuit Court for the Northern District of Illinois. *Washburn & Moen* v. *Haish,* 4 Fed. 900. The patent was then reissued and in *Washburn & Moen Mfg. Co.* v. *Fuchs,* 16 Fed. 661, 667, the Circuit Court for the Eastern District of Missouri held the reissue to be unwarranted and void. Suits were then brought upon the original patent in the Circuit Court for the Northern District of Iowa (*Washburn & Moen Mfg. Co.* v. *Beat 'Em All Barbed-Wire Co.,* 33 Fed. 261), the patent was again held invalid. The Supreme Court held the original patent to be valid.

II.

Cases in the Supreme Court Where the Patent Was Held Invalid by the Circuit Court of Appeals in One Circuit, and Later Held Valid by the Circuit Court of Appeals in Another Circuit:

Expanded Metal Co. v. *Bradford,* 214 U. S. 366. The patent was held to be invalid by the Circuit Court of

Appeals for the Third Circuit. *Bradford* v. *Expanded Metal Co.*, 146 Fed. 984. After the decree in the Circuit Court of Appeals for the Third Circuit, plaintiff filed a bill against another defendant in the Northern District of Ohio, the District Court held the patent to be invalid on the authority of the case in the Circuit Court of Appeals for the Third Circuit (157 Fed. 564). On appeal the Circuit Court of Appeals for the Sixth Circuit reversed this finding and held the patent to be valid. *Expanded Metal Co.* v. *General Fireproofing Co.*, 164 Fed. 849. On certiorari from the decree in the Sixth Circuit the Supreme Court held the patent to be valid.[1]

Diamond Rubber Co. v. *Consolidated Rubber Tire Co.*, 220 U. S. 428. The patent was held to be invalid by the Circuit Court of Appeals for the Sixth Circuit in *Goodyear Tire & Rubber Co.* v. *Rubber Tire Wheel Co.*, 116 Fed. 363; also by the same court in *Rubber Tire Wheel Co.* v. *Victor Rubber-Tire Co.*, 123 Fed. 85. In subsequent litigation the Circuit Court of Appeals for the Second Circuit held the patent to be valid. *Consolidated Rubber Tire* v. *Firestone Tire & Rubber Co.*, 151 Fed. 237; also in *Consolidated Rubber Tire Co.* v. *Diamond Rubber Co.*, 162 Fed. 892. The Supreme Court held the patent to be valid.

Dowagiac Mfg. Co. v. *Minnesota Moline Plow Co.*, 235 U. S. 641, did not involve the validity of the patent, but the Circuit Court of Appeals for the Sixth Circuit had held

---

(1) In *Expanded Metal Co.* v. *Bradford*, 214 U. S. 366, petitioner asserts, without citing authority, that the bill in the second suit was filed February 10, 1904, which was prior to the rendition of the decision of the Circuit Court of Appeals for the Third Circuit holding the patent invalid. See statement in opinion of this Court, 214 U. S. 366, 374.

The statement has been amended by inserting the word "having" after the words—Third Circuit, plaintiff—and by changing the period after the word "Ohio" in the next line to a comma, and changing the capital letter T immediately following to a small letter. The change, of course, does not change the fact that after the Circuit Court of Appeals for the Third Circuit on Sept. 10, 1906, held the patent invalid, the patentee during a period of more than *two years* intervening before the decision of the Circuit Court of Appeals for the Sixth Circuit on Oct. 16, 1908, filed no disclaimer, and indeed never did file a disclaimer. Petitioners' criticism of this citation implies that the pendency of litigation in another circuit was proper and constituted an excuse for not filing any disclaimer.

plaintiff to be entitled to defendant's entire profits. *Brennan & Co.* v. *Dowagiac Mfg. Co.*, 162 Fed. 472. Subsequently the Circuit Court of Appeals for the Eighth Circuit held plaintiff to be entitled only to nominal damages. *Dowagiac Mfg. Co.* v. *Minnesota Moline Plow Co.*, 183 Fed. 314. The Supreme Court, after stating the law, substantially followed the ruling of the Eighth Circuit but reversed the decree for special reasons.

Hanover Star Milling Co. v. *Metcalf*, 240 U. S. 403. A suit on the trademark "Tea Rose" was dismissed by the Circuit Court of Appeals for the Fifth Circuit. *Metcalf* v. *Hanover Star Milling Co.*, 204 Fed. 211. In a suit in the Seventh Circuit filed shortly before the decision in the Fifth Circuit, the Circuit Court of Appeals for the Seventh Circuit upheld plaintiff's rights in part. *Hanover Star Milling Co.* v. *Allen & Wheeler Co.*, 208 Fed. 513. Because of a diversity upon fundamental questions, the Supreme Court took both cases and decided the questions in dispute.

Railroad Supply Co. v. *Elyria Iron Co.*, 244 U. S. 285. In copending cases the patent was held invalid by the Circuit Court of Appeals for the Sixth Circuit. *Railroad Supply Co.* v. *Elyria Iron Co.*, 213 Fed. 789, and valid by the Circuit Court of Appeals for the Seventh Circuit. *Railroad Supplies Co.* v. *Hart Steel Co.*, 222 Fed. 261. The Supreme Court held the patent invalid.

Abercrombie & Fitch Co. v. *Baldwin*, 245 U. S. 198. The original Letters Patent were held not infringed (²) by the Circuit Court of Appeals for the Seventh Circuit. *Bleser* v. *Baldwin*, 199 Fed. 133. The patent was then reissued and the reissue held void by the Circuit Court of Appeals for the Third Circuit. *Grier Bros. Co.* v. *Baldwin*, 219 Fed. 735. The Circuit Court of Appeals for the Sec-

(²) *Abercrombie & Fitch* v. *Baldwin*, 245 U. S. 198. The words "not infringed" have been inserted in lieu of the word—invalid—. See statement in this Court, 245 U. S. 198, 200.) After the decision of the Circuit Court of Appeals for the Third Circuit holding the patent invalid, on January 22, 1915, during the intervening period of upwards of nine months before the opinion of the Circuit Court of Appeals for the Second Circuit on November 9, 1915, plaintiff continued without disclaimer, and no disclaimer was filed thereafter.

ond Circuit then held the reissue patent to be valid. *Baldwin v. Abercrombie & Fitch Co.*, 228 Fed. 895. The Supreme Court held the patent to be valid and subsequently (*Simmons Co.* v. *Grier Bros. Co.*, 258 U. S. 82, upheld an application to reopen the case in the Third Circuit.

T. H. Symington Co. v. *National Malleable Castings Co.*, 250 U. S. 383. The question was one of priority as between Emerick and Byers. The Circuit Court of Appeals for the Seventh Circuit held that Emerick was prior. (*Miner* v. *T. H. Symington Co.*) 229 Fed. 730. Subsequently the Circuit Court of Appeals for the First Circuit held Byers to be prior. (*National Malleable Castings Co.* v. *T. H. Symington Co.*, 230 Fed. 821.) The Supreme Court held Byers to be the prior inventor.

Meccano, Ltd. v. *John Wanamaker*, 253 U. S. 136. The District Court in the Southern District of Ohio upheld the patent. The Circuit Court of Appeals for the Sixth Circuit (246 Fed. 603) reversed the District Court and held the patent invalid. Meanwhile suit had been brought in the Southern District of New York where a preliminary injunction was granted and an appeal was taken therefrom. After the decision of the Circuit Court of Appeals for the Sixth Circuit, motion was made before the Circuit Court of Appeals for the Second Circuit to dismiss the New York case. The Circuit Court of Appeals for the Second Circuit (*Meccano, Ltd.* v. *John Wanamaker*, 250 Fed. 250) denied the motion and subsequently (*Meccano* v. *John Wanamaker*, 250 Fed. 450) reversed the order granting a preliminary injunction, at the same time expressing the opinion that the patent was invalid. On certiorari the Supreme Court affirmed the Second Circuit, stating that the matter for review was "upon the preliminary order for injunction and we may go no further," and remanded the cause to the District Court for further proceedings.

New York Scaffolding Co. v. *Chain Belt Co.*, 254 U. S. 32. After the Circuit Court of Appeals for the Eighth

Circuit had held the patent to be valid,(3) *New York Scaffolding Co.* v. *Whitney*, 224 Fed. 452, and the Circuit Court of Appeals for the Third Circuit had held the patent to be invalid (*New York Scaffolding Co.* v. *Liebel-Binney Construction Co.*, 243 Fed. 577), the Circuit Court of Appeals for the Seventh Circuit held the patent to be valid (*Chain Belt Co.* v. *New York Scaffolding Co.*, 245 Fed. 747). The Supreme Court held the patent to be invalid.

John E. Thropp's Sons' Co. v. *Seiberling*, 264 U. S. 320. The Circuit Court of Appeals for the Sixth Circuit held two claims invalid. *Seiberling* v. *Firestone Tire & Rubber Co.*, 257 Fed. 74. After qualified disclaimers, the Circuit Court of Appeals for the Third Circuit held the patent as qualified by the disclaimers valid (284 Fed 746). The Supreme Court held the patent to be invalid.

Corona Co. v. *Dovan Co.*, 276 U. S. 358. The patent was first held invalid by the Circuit Court of Appeals for the Second Circuit. *Dovan Chemical Co.* v. *National Analine & Chemical Co.*, 292 Fed. 555. The patent was then held valid by the Circuit Court of Appeals for the Third Circuit, 10 Fed. (2d) 598. The Supreme Court held the patent to be invalid.

Saranac Automatic Machine Corp. v. *Wirebounds Co.*, 282 U. S. 704. The patent was held invalid by the Circuit Court of Appeals for the Seventh Circuit in *Wirebounds Patents Co.* v. *Gibbons Box Co.*, 25 Fed. (2d) 363. Subsequently the Circuit Court of Appeals for the Sixth Circuit held the patent valid and infringed, 37 Fed. (2d) 830. The Supreme Court held the patent invalid.

Radio Corp. v. *Radio Laboratories*, 293 U. S. 1. After the Supreme Court had held DeForest to be the prior inventor the Circuit Court of Appeals for the Second Circuit held Armstrong to be the inventor 66 Fed. (2d) 768. The Supreme Court upheld DeForest.

---

(3) The word "valid" in line 4 has been substituted for—invalid—. The change of course does not avoid the fact that after the decision of the Circuit Court of Appeals for the Third Circuit holding the patent to be invalid, the patentee persisted in his claim before the Circuit Court of Appeals for the Seventh Circuit.

III.

Cases in Circuit Courts of Appeals Where the Patent Was First Held to Be Invalid by One Circuit Court of Appeals and Later Held to Be Valid by Another Circuit Court of Appeals (omitting cases which reached the Supreme Court):

Maitland v. *Goetz Co.*, 86 Fed. 124 (Second Circuit). Stiringer patent held invalid by Circuit Court of Appeals for the Third Circuit. *Maitland* v. *Gibson*, 63 Fed. 840. Patent then surrendered and reissued by narrowing claim 1. The reissued claim 1 held valid by Circuit Court of Appeals for the Second Circuit.

McNeely v. *Williames*, 96 Fed. 978 (Third Circuit). Certain claims were held invalid in 1890 by the Circuit Court of Appeals for the Second Circuit (*Williames* v. *Barnard*, 41 Fed. 358), the opinion stating that on filing a disclaimer of the claims held invalid complainants were entitled to a decree upon the other claims. Apparently no appeal was taken by the defendant and at that time plaintiff had no right of appeal from the dismissal. For some reason not apparent on the record, a decree was, according to the opinion of the court in the Third Circuit (p. 980), entered on June 11, 1892, without any disclaimer having been filed. Suit was brought in the Third Circuit on January 27, 1893. Defendant asserted (p. 980) that "The patent in suit is wholly void by reason of unreasonable neglect or delay" to enter a disclaimer. The Circuit Court of Appeals for the Third Circuit held (p. 986), "We must, therefore, hold that the Reid & Billinton apparatus did not anticipate any of the claims of the patent in suit, and consequently that Williames was under no obligation to enter a disclaimer," and held the patent valid.

Westinghouse Company v. *Stanley Co.*, 133 Fed. 167 (First Circuit). The patent was held invalid by the Circuit Court of Appeals for the Second Circuit (*Westinghouse Co.*

v. *Catskill Co.*, 121 Fed. 831), holding plaintiff's attempted antedating proofs to be insufficient. The Circuit Court of Appeals for the First Circuit upon more complete proofs held the patent valid. So did the Circuit Court of Appeals for the Seventh Circuit in *Diamond Meter Co.* v. *Westinghouse*, 152 Fed. 704.

Thomson-Houston Co. v. *Black River Traction Co.*, 135 Fed. 759 (Second Circuit). In this case the patent had been held invalid by the Circuit Court of Appeals for the Second Circuit in *Thomson-Houston Elec. Co.* v. *Union Ry. Co.*, 86 Fed. 636, and also by the Circuit Court of Appeals for the Sixth Circuit in *Thomson-Houston Elec. Co. v. Jeffrey Mfg. Co.*, 101 Fed. 121. Subsequently the patent was reissued. In the previous litigation (86 Fed. 636), plaintiff urged that the claim contains certain features by implication and therefore was not anticipated. The reissue specification contained a disclaimer limiting the claim to the features in question. It was held that the reissued claim was not for different inventions, and that the claim was valid.

Imperial Bottle Cap & Machine Co. v. *Crown Cork & Seal Co.*, 139 Fed. 312 (Fourth Circuit). Pending consideration of the case by this court, the Circuit Court of Appeals for the Second Circuit held the patent invalid. *Crown Cork & Seal Co.* v. *Standard Stopper Co.*, 136 Fed. 841. This court recognizing the doctrine of comity, nevertheless held the patent to be valid.

Pieper v. *S. S. White Dental Co.*, 228 Fed. 30 (1915). Patent held valid and infringed by the Circuit Court of Appeals for the Seventh Circuit. Previously in 1908 the patent had been held invalid by the Circuit Court of Appeals for the Seventh Circuit. *Pieper v. Electro Dental Mfg. Co.*, 160 Fed. 930.

In *Backstay Machine & Leather Co.* v. *Hamilton*, 262 Fed. 411 (1920), certain claims were held invalid. In a subsequent suit, *Backstay Machine & Leather Co.* v. *Zenite Metal Co.*, 293 Fed. 23, the Circuit Court of Appeals for the

Seventh Circuit held the same claims to be valid and infringed.

In *Wenborne-Karpen Dryer Co.* v. *Cutler Dry Kiln Co.*, 290 Fed. 625 (1923), the Circuit Court of Appeals for the Second Circuit held the patent void for lack of invention. After the decision in the Second Circuit, the defendant, in a pending suit in the Sixth Circuit, moved to dismiss upon the ground of privity between the parties. The Circuit Court of Appeals in the Sixth Circuit overruled the plea of privity, reversed a decree of the lower court dismissing the bill, and remanded the case for hearing on the merits. *Wenborne-Karpen Dryer Co.* v. *Dort Motor Car Co.*, 14 Fed. (2d) 378.

In *Franc-Strohmeyer & Cowan* v. *Arthur Siegman*, 27 Fed. (2d) 785, the patent was held valid after it had been held invalid by the Circuit Court of Appeals for the Sixth Circuit, *Forchheimer* v. *Franc, Strohmeyer*, 20 Fed. (2d) 553.

Comment by Counsel.

Except as noted in the foregoing footnotes, the footnote in the opinion of the Circuit Court of Appeals is believed to be entirely accurate.

Petitioners' criticisms with respect to *Expanded Metal Co.* v. *Bradford, Diamond Rubber Co.* v. *Consolidated Rubber Tire Co.; Railroad Supply Co.* v. *Elyria Iron & Steel Co.; Abercrombie & Fitch* v. *Baldwin; Meccano Ltd.* v. *John Wanamaker; New York Scaffolding Co.* v. *Chain Belt Co.;* and *Saranac Automatic Mach. Corp.* v. *Wirebounds Patents Co.;* are directed merely to the claim that at the time of the decision in one Circuit Court of Appeal invalidating the patent, there was a previous decision upholding the patent, or that the plaintiff had pending suits in other jurisdictions in which later the patent was held to be invalid. If this criticism be valid it can only be because such pendency is deemed to be the equivalent course sug-

gested in *Ensten* v. *Ascher,* 282 U. S. 445, i.e., that the patentee is diligent in "vindicating his position."

The criticism against *Dowagiac Mfg. Co.* v. *Minnesota Moline Plow Co.; and Hanover Star Milling Co.* v. *Metcalf;* merely emphasizes that in petitioners' view litigants in other cases are not estopped by the first adverse decision of a Circuit Court of Appeals.

APPENDIX B.

Chronological Statement of Steps in Litigation. (Data Relating to Title Suits in Italics).

1927, Sept. 20.—Suit filed in District of Delaware against Radio Corporation of America charging infringement of patents in question.

1928, Nov. 19.—Suits consolidated for purposes of trial.

1928, Nov. 19 to 1928, Dec. 12} Trial in open court.

1929, Apr. 1.—Argument on pleadings and proofs.

1929, Aug. 12.—Opinion of Judge Morris in District Court holding patents valid and infringed, filed.

1929, Sept. 21.—Petition for rehearing filed.

1929, Oct. 7.—Rehearing denied.

1929, Oct. 11.—Interlocutory decree finding patents valid and infringed entered.

1929, Oct. 11.—Appeal allowed defendant.

1930, Apr. 19.—United States files two suits in the U. S. District Court for the Eastern District of New York, against Percival D. Lowell, to secure title in Letters Patents 1,455,141 and 1,606,212.

1930, Apr. 19.—United States files three suits in the Supreme Court of the District of Columbia, against Francis W. Dunmore, to secure title in all three Lowell and Duunmore patents.

1930, Apr. 19.—United States files suit in the U. S. District Court for the Southern District of Maine, against Morkrum Company, to secure title in Dunmore patent 1,635,117.

1930, Apr. 22.—Suit filed in District of Delaware against Dubilier Condenser Corporation by United States alleging ownership of the inventions and seeking to acquire title to the patents in question.

1930, July 28.—Consolidated record on appeal in infringement suits filed with Clerk Circuit Court of Appeals, Third Circuit.*

1930, Oct. 7.—Title suits consolidated for purposes of trial.

1930, Oct. 7, 8, 9, 10.—Trial of title suits in open court.

1930, Nov. 24.—Hearing on pleadings and proofs in title suits.

*The Appellate Court being informed of the pendency of the title suits brought by the United States in the Delaware District argument of infringement suits was postponed until trial, decision and appeal in title suits.

1931, Apr. 27.—Opinion of court sustaining title in patentees, filed.

1931, May 5.—Final decree dismissing bill filed by United States, re Title to patents.

1931, June 5.—Order allowing appeal by United States.

1931, Nov. 7.—Record on appeal by United States in Title suit filed with Clerk Circuit Court of Appeals, Third Circuit.

1931, Dec. 10.—Title suits argued before Court of Appeals.

1931, Dec. 12.—Infringement suits argued before Court of Appeals.

1932, Jan. 23.—Albert S. Blatterman filed Bill in Equity in the Supreme Court of the District of Columbia, Equity 53,937, against Lowell and Dunmore, under R. S. 4915, to secure reversal of the opinion of the Board of Appeals dated July 25, 1931.

1932, Mar. 18.—U. S. Circuit Court of Appeals for the Third Circuit reversed the District Court opinion with respect to claims 3 and 14 of patent 1,455,141, and held claims 3 and 14 invalid; U. S. Circuit Court of Appeals reversed District Court with respect to claim 9 of patent 1,635,117. (59 Fed. Rep. (2d) 305).

1932, May 24.—Opinion of Court of Appeals, Third Circuit, affirming decree dismissing bill by United States. Re Title to patents, filed.

1932, July 6.—Petitions for rehearing denied by U. S. Circuit Court of Appeals for the Third Circuit, with respect to claims 3 and 14 of patent 1,455,141.

1932, Aug. 24.—U. S. of America filed petition for certiorari in the Supreme Court of the United States in the cases of U. S. of America v. *Dubilier Condenser Corporation.* (Title case.)

1932, Sept. 24.—Petition for certiorari to Supreme Court of the United States, in the infringement suits of *Dubilier Condenser Corporation et al.* v. *Radio Corporation of America.*

1932, Oct. 17.—Certiorari granted upon petition of United States, re title to patents.

1932, Oct. 25.—Certiorari denied upon petition of plaintiffs in infringement suits.

1933, Apr. 10.—Opinion by Supreme Court affirming decree dismissing bill by United States, Re Title to patents. (289 U. S., 178.)

1933, June 8.—United States dismisses three bills of Complaint against Francis W. Dunmore for title in the Supreme Court of the District of Columbia.

1933, July 3.—United States dismisses two suits against Percival D. Lowell for title in the United States District Court for the Eastern District of New York.

1933, July 8.—Disclaimers filed in the United States Patent Office with respect to patents 1,455,141 and 1,635,117.

APPENDIX C.

The Nature of the Inventions and the Errors of the Circuit Court of Appeals for the Third Circuit.

1. The Utility of the Inventions and Commercial History.

Prior to the inventions of the patents in suit the universal practice in the operation of radio receiving sets depending upon the use of vacuum tubes for their operation was to use a storage battery (called the A battery) to supply the heating current for the filament (i. e., cathode) of the tubes, a large dry cell (called the B battery) for supplying current to the plate circuit, and a small dry cell (called the C battery) for maintaining the grid of the tube at a predetermined normal potential.

By the adoption of the inventions users of radio broadcast receiving sets have been enabled to connect their sets with the ordinary alternating current house lighting supply mains, with entire relief from the old burden and expense in recharging storage batteries for heating filaments and renewing dry cells for plate circuits and grid circuits.

2. The Prior Commercial Broadcast Receivers.

The earliest of the radio broadcast receivers employing the three-electrode vacuum tube was the Aeriola, Sr., put out by Westinghouse Electric & Manufacturing Company in 1922. (Vol. II, p. 641.) The circuit of this set is shown at Vol. II, p. 642.

In this set the received signal, as before, is received by the antenna and passed through the "tuner" circuit, but now is impressed upon the grid of the vacuum tube, thus causing the potential on the grid to vary as indicated in the graph immediately below the "regenerative detector and amplifier." Here, as before, the lower half of the high frequency waves is suppressed and the waves vary in amplitude in accordance with the modulation frequency, but in going through the tube the amplitude of the waves is in-

creased and by reason of being bed back into the grid circuit and again passed through the tube the amplitude is still further increased, as indicated in the lower graph immediately above the tube. Therefore in the telephones we now have the modulation frequency of much greater power than in the crystal detector.

The Aeriola, Sr. was soon followed by an " R. C." set (Vol. II, pp. 643-649). In this set the output of the tube was coupled to the input of another tube and the output of the second tube connected to the input of a third tube, thereby further amplifying the detected signal.

Examples of these regenerative sets are found in plaintiffs' Ex. 8 (physical) and 66 at page 643 of Vol. II.

The tubes of these regenerative sets were powered by batteries. The apparatus employed is shown in the cut at Vol. II, p. 649. The filaments were energized by a large storage battery connected to the wires depending from the set. The plate circuit was energized by a large dry battery known as a B battery shown at the left of the set.

These regenerative sets constituted the great bulk of the receiving sets on the market (Van Deventer, Vol. I, p. 230).

3. Commercial Development on Behalf of Lowell and Dunmore.

In April, 1922, with the full approval of the Bureau of Standards, Mr. Dunmore read a paper before the *American Institute of Electrical Engineers* describing the invention of the amplifier patent 1,635,117 (Pltffs.' Ex. 53, Vol. II, p. 623). In July, 1922 the *Bureau of Standards* published a bulletin (Pltffs.' Ex. 106, Vol. II, p. 761) describing the inventions of the receiving set patent 1,455,141, and the amplifier patent 1,635,117. In July, 1922 Mr. Lowell read a paper before the *American Institute of Electrical Engineers* (Pltffs.' Ex. 21, Vol. II, p. 605). The alternating current operated receiving set described in these publications is now before the Court as Pltffs.' Exs. 19 and 20 (physical). The above papers were followed by similar descriptions in

numerous other magazines, for example, *Radio* for September, 1922 (Pltffs.' Ex. 21, Vol. II, p. 608); *Telephone* for September, 1922 (Vol. II, p. 616); *Q. S. T.* for October, 1922 (Vol. II, p. 613); *Radio News* for September, 1922 (Vol. II, p. 615); *Radio News*, July, 1922 (Vol. II, p. 627); *Radio*, November, 1922 (Vol. II, p. 631); *Radio Broadcast*, October, 1922 (Vol. II, p. 599).

The inventions at the time also attracted the attention of the newspaper publications such as the *New York Times*, April, 1922 (Vol. II, p. 600); *Washington Herald*, April, 1922 (Vol. II, p. 601); *New York Globe*, April, 1922 (Vol. II, p. 602); *Washington Post*, April, 1922 (Vol. II, p. 603); *Washington Star*, April, 1922 (Vol. II, p. 604).

Representatives of various manufacturers visited Mr. Dunmore's laboratory (Brady, Vol. I, p. 315).

On June 1, 1922, a license was granted to the Radio Instrument Company (Pltffs.' Ex. 51, Vol. I, p. 405) and Mr. Lowell severed his connections with the Bureau of Standards and became chief engineer of that company and built a set for demonstration (Exhibits 24-25 Physical Brady, Vol. I, pp. 312-313). The Radio Instrument Company license was exclusive until 1923, and the company was unable to raise funds to exploit the invention. Hence the inventors were practically blocked in their efforts to exploit the inventions until July, 1923 (Brady, Vol. I, p. 313).

Representatives of various manufacturers visited Mr. Dunmore's laboratory (Brady, Vol. I, p. 315). The set at the Bureau of Standards and the publications above referred to attracted much attention. For example, the *Westinghouse Electric & Manufacturing Company*, in its publication the *Electrical Journal* for December, 1922 (Pltffs.' Ex. 55, Physical Exhibit) the footnote, made mention of one of the Lowell publications in the Journal of the *American Institute of Electrical Engineers* (Vol. II, p. 605).

In May, 1923, Mr. Brady sent a copy of patent No. 1,455,141 to the *General Electric Company* (Vol. I, p. 313) but that company was not interested (Vol. I, p. 314).

In July, 1923 the attention of the Westinghouse Company was called to the patent, but that company claimed that every material part of the invention was shown in a prior application of its own (Pltffs' Ex. 52, Vol. I, p. 409). The application subsequently was placed in interference with the Lowell & Dunmore patent and decided adversely to Westinghouse.

In November, 1923 the *Radio Corporation,* after considering the purchase of patent 1,455,141, wrote that it considered the patent to be invalid and that it was not interested (Pltffs' Ex. 10, Vol. I, p. 391). During the summer and fall of 1923 the inventors were building another receiving set (Vol. I, p. 314). This set is in evidence as Pltffs' Ex. 48, and Ex. 47 (Vol. II, p. 620) is a photograph thereof.

In the latter part of 1923 Mr. George H. Lewis heard that an alternating current set had been developed in Washington and early in 1924 took Mr. Crosley of the *Crosley Radio Corporation* to see it (Vol. I, p. 303). They saw the set (Pltffs' Ex. 26-47) operated, but although it operated properly (Vol. I, p. 310) they thought it too complicated for their business which comprised simple and cheap sets (Vol. I, p. 303).

The set was also demonstrated to numerous other radio concerns, such as the *Timmons Radio Product Corporation*, the *Pathe Phonograph & Radio Corporation* and the *Wired Radio Company* (Vol. I, p. 315).

Early in 1924 it was exhibited to the Brandes Laboratories (Brady, Vol. I, p. 315).

In the spring of 1924 Mr. Freed of the *Freed-Eisemann Company* visited Washington and saw the receiving set (Freed, Vol. I, p. 342). He considered it satisfactory and arranged for the Freed-Eisemann Company to forward one of its battery operated receiving sets to Washington (Freed, Vol. I, p. 342) which was done in June, 1924 (Brady, Vol. I, p. 316). This set was converted to embody the invention (Freed, Vol. I, p. 342) and was sent to the

Freed-Eisemann Company in New York. This set is in evidence as Pltffs' Exs. 27 and 28. Pltffs' Ex. 49 (Vol. II, p. 621) is a photograph of the set. Shortly thereafter Mr. Freed went to Europe and on his return found that his partner had returned the set to Lowell and Dunmore fearing that its manufacture might entail infringement upon other patents (Freed, Vol. I, p. 342).

In October, 1924 (Vol. II, p. 570) agreements were made with the respondent *Dubilier Condenser Corporation.*

During 1924, 1925 and 1926 a number of licenses were granted to the following parties (Vol. I, pp. 368-369):

Dubilier Condenser Corporation
The Timmons Radio Product Corporation
The Fansteel Products Company
The Grigsby-Grunow-Hinds Company
The Willard Storage Battery Company
The Elkon Works, Incorporated
The Argus Radio Corporation
The Brandes Products Corporation
The Briggs-Stratton Corporation

The license fees amounted in 1926 to $7,000, in 1927 to $21,000, and in 1928 to $22,710. The total royalties received up to the time of the trial in Delaware amounted to $50,710 (Sweeney, Vol. I, pp. 337-338).

After the Dubilier Condenser Corporation (Vol. I, pp. 371-380) had expended several hundred thousand dollars in commercial development (Vol. I, p. 231), and license agreements had been made with several manufacturers, the Radio Corporation and its associated companies in the fall of 1927 manufactured and put upon the market large quantities of infringing alternating current operated receiving sets, with the result of substantially destroying the business built up under the patents by the Dubilier Condenser Corporation (Vol. I, p. 231).

4. Causes of Hum in Vacuum Tube Radio Receivers.

The fundamental operation of the vacuum tube, upon which the operation of the modern radio receiver depends, is described in the opinion of this Court in *DeForest Radio Co.* v. *General Electric Co.*, 283 U. S 420.

The accompanying diagram shows the input circuit to the grid G, the circuit from battery A to heat the cathode F, and the circuit from battery B to furnish the local power for the plate circuit.

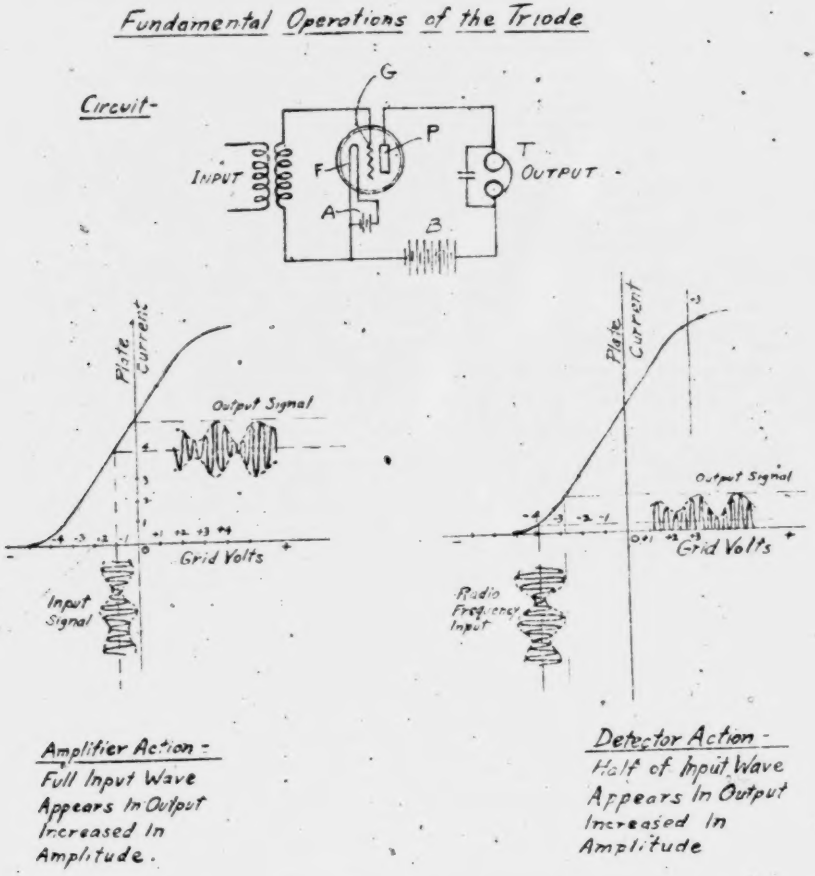

The importance of the tube for its use as a radio receiver depends upon the fact that variation of voltage on the grid G controls the electron stream from cathode F to plate P

and upon the fact that the power required to change the voltage on grid G is almost negligible and the local power controlled by this change in voltage is many times greater. Hence the incoming signal of very weak power applied to the grid is "amplified" in the output circuit.

The action of the tube is usually described with respect to a "characteristic curve," shown in the diagram, whereby increase of grid voltage causes a rise in the plate current as indicated in the heavy curved lines.

The increase of grid voltage from zero produces relatively small change in plate current; the further rise of grid voltage produces a uniform change and as the tube approaches saturation the change in plate current diminishes with a given rise in grid voltage. The curve therefore is frequently referred to as having a knee at the lower and upper ends and a straight portion in the middle. When the tube is operating as an amplifier a fixed normal voltage is applied to the grid to cause the variations to occur above and below a fixed point, such as 4. When the tube is to operate as a detector the applied grid voltage should be such as to cause the normal operation to occur at one of the knees of the curve, indicated at −4. Under this condition a rise in voltage above the normal point causes a greater increase in the amplitude of the wave than does a drop in grid voltage below the normal voltage, thus in effect cutting off one-half of the wave.

(a) If the biasing potential on the grid is not a steady unvarying potential, such as is derived from a "C" battery, the varying grid potential will reproduce a similar and amplified variation in the plate circuit.

(b) If the variation in grid potential is of sufficient amplitude, as for example if it comes from a local power source, it may be sufficient to change the grid potential to such an extent that the operating point of the tube will be raised or lowered to one of the knees of the curve, in which case the amplitude of the several cycles of the signal current will be changed, thus destroying the "modulation" carried

by the signal frequency, and in this case the distorted signal frequency will be amplified, and cannot be restored in any subsequent stage of the receiver.

(c) The incoming signal is very weak, whereas local power frequencies are relatively strong. Hence in the input stage of the receiver the power frequency would be so large in amplitude as to drown out the signal frequency altogether, and may distort the modulation.

(d) The wires of a radio receiver are in themselves miniature antennae and local oscillating current induces similar oscillating voltages in the plate circuits which tend to vary the frequency in the plate circuit and, if passed on to subsequent tubes, are amplified and may eventually drown out the signal.

(e) If the current employed to heat the cathode is alternating or fluctuating, the electron emission from the cathode likewise varies, thus varying the electron stream, and these variations are passed on to subsequent tubes.

5. Dunmore Patent No. 1,635,117.

This invention was conceived of by Dunmore on August 5, 1921 and reduced to practice December 16, 1921. (*United States* v. *Dubilier Condenser Corporation*, 289 U. S. 178, 184). It is therefore earlier in date than the other two patents in suit although the patent was issued later.

The particular feature of the patent here in controversy relates to the operation of the audio frequency amplifier from household alternating current, which is the subject matter of claims 9, 11 and 12. For convenience we here insert a copy of Fig. 1 of the Dunmore patent.

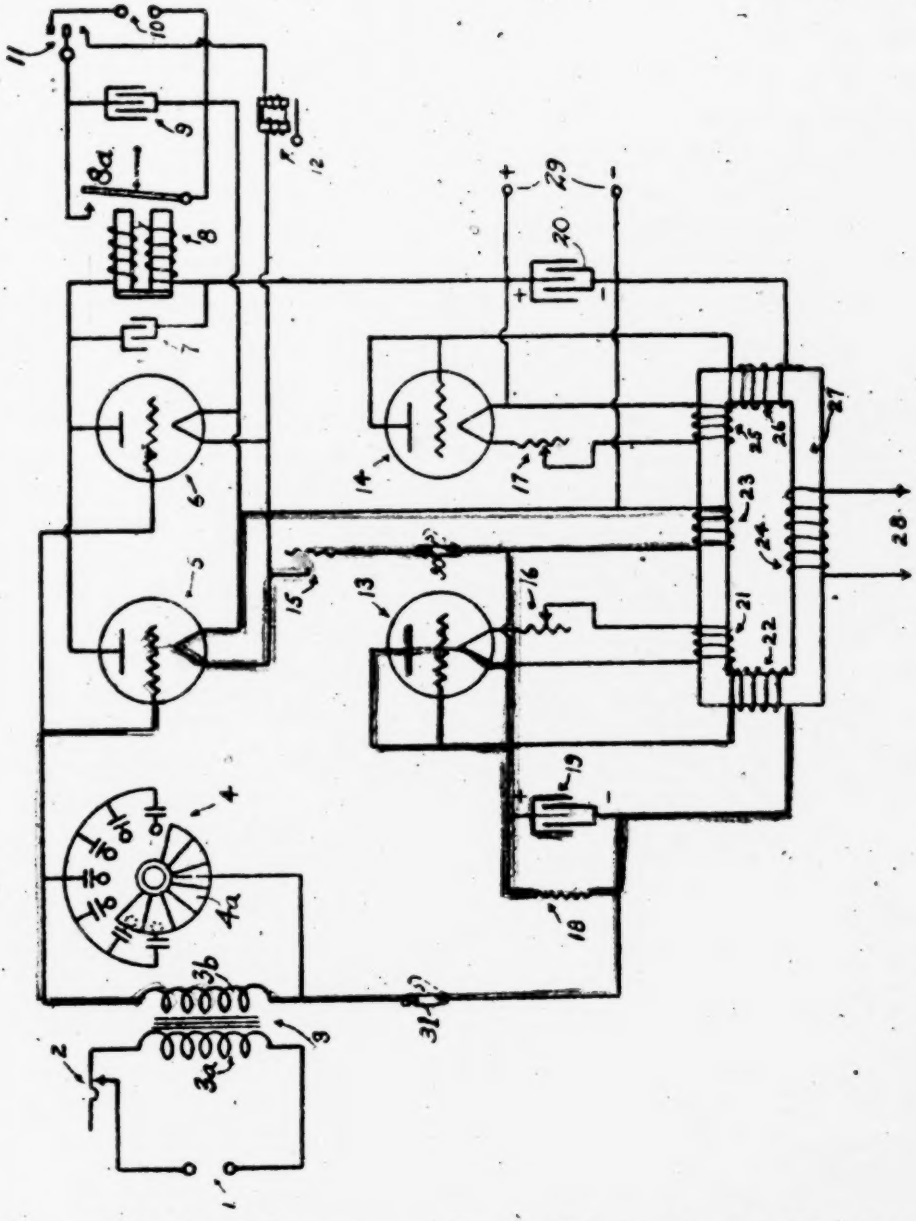

Fig. 1 of Dunmore audio amplifier patent 1,635,117.
(Colors added by counsel.)

At the time of taking out the patent Dunmore's immediate application of the low frequency relay was its use to operate a relay from a selected incoming low frequency signal either wire or wireless which the relay would amplify, and deliver to a magnet 8 in the output circuit, which magnet being actuated would open or close a switch 8a.

In the apparatus disclosed the primary winding 3a receives a low frequency signal, either in the form of long radio waves such as from the Annapolis station (p. 4, lines 6-10) or by wire, as from the output of a radio detector (p. 1, lines 11, 100; p. 2, line 12; p. 3, line 114 to p. 4, line 10).

The particular frequency desired may be selected by tuning the input circuit to the amplifier by means of the variable condenser 4.

The amplifier tube, to be operated as an *amplifier* requires the maintenance of a constant negative potential on the grid, called the biasing potential, in order to cause the tube to operate upon the straight part of its characteristic curve (*ante* p. 42). When the tube is powered by direct current this grid biasing potential is furnished by a C battery; the filament is heated by an A battery and the plate energized by a B battery.

Dunmore proposed to apply alternating current in all three of these places, one of which, the grid, is the most sensitive part of the tube, and moreover to use alternating current within the audible range. To state his task is almost equivalent to stating its impossibility of performance.

The means for attaining the desired objective as shown and described in the patent, comprise:

(a) for the A battery he substituted raw alternating current.

(b) for the B battery he substituted rectified current, rectified by the rectifier tube 14, and more or less smoothed out by connecting a condenser 20 in circuit, whereby the pulsating current from the rectifier charged and discharged the condenser (p. 2, lines 101-103).

Rectified current is illustrated in the cut here inserted. The upper line indicates the wave form of alternating cur-

rent. The middle line the rectified current. By using two rectifier tubes, both halves of the wave may be utilized as shown in the bottom line.

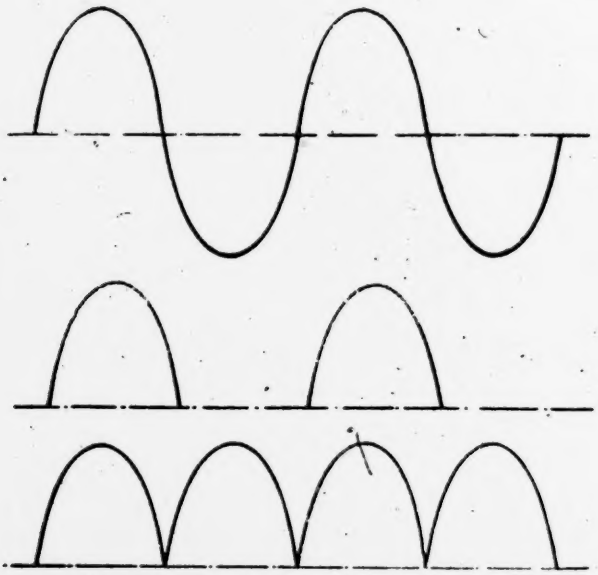

Figure 7. Diagram illustrating rectification.

The rectified current is still a pulsating current which, if strong enough, will be heard as a hum in the loud speaker, or if imparted to the grid of the tube will be greatly amplified and heard in the speaker.

(c) For the C battery he substituted rectified current, i. e., a pulsating current from rectifier 13 direct to the grid circuit, *and in the grid circuit he located a high resistance 18 (p. 2, lines 109-112) shunted by a condenser 19* (p. 2, lines 99-101).

Curiously enough, although each of these separate instrumentalities in itself cannot eliminate hum, the combination as a whole does function effectively.

A resistance offers the same impedance to current regardless of frequency. A condenser on the other hand offers more impedance to low frequency current than to high frequency current. Although both the signal current and power current are of audible frequency, the power cur-

rent is near the lower limit of audibility, i.e., 60 cycles, whereas the average speech or music will be from 100 or 200 up to 9,000 or 10,000 cycles. Hence the signal current freely passes through the condenser while the power voltage serves only to charge it every half cycle. Thus the condenser serves as a reservoir for the power current and a low resistance path for the signal current. The resistor being in shunt with the condenser permits a limited current to flow out of the condenser, but as the condenser is charged 60 times per second the resistor does not permit all the current to discharge from the condenser and hence the *voltage* across the resistor remains at a substantially steady value. This is due to the large reservoir action of the condenser. The slight variation across the resistor at the power frequency only produces a relatively small variation of potential on the grid, which small variation at 60 cycles is drowned out by the large incoming signal current variations of higher, but audible, frequency.

A condenser and a resistance of given values connected in parallel in an electric circuit are capable of unique action. If the current flowing is alternating, as in the case considered, the condenser will be periodically charged, and will discharge across the resistance. The circuit of the condenser and resistance possesses a characteristic known as its time constant which is equal to the product of RC (R = resistance, and C = capacity) and if the frequency of the energizing current is conducive to this time constant, the current will be passed freely; but if not conducive, the current will be suppressed. In other words, the resistance-condenser combination is selective of the frequency passed, and when suitable sizes of condenser and resistance are employed, the combination can be made effective to pass current of signal frequencies and suppress current of hum frequencies by having a time constant too small for the low hum frequencies to coact with—that is, the condenser does not charge and discharge with the alternations of the low frequency hum current, which is necessary for the current to pass, and the hum current is, therefore, suppressed.

The combination is, therefore, in effect, a filter, blocking currents of undesired frequencies. The units—condenser and resistance—do not function separately to pass currents of different characteristics, but in cooperation to select and pass desired currents and suppress undesired currents by reason of their frequency and the characteristic time constant of the selective circuit.

In the modern radio receiver the signal strength, even though in the audio range, is so much stronger and of sufficiently high frequency to make any low power frequency substantially inaudible.

The Claims in Suit

Claims 9, 11 and 12 are in suit.

Claim 9 is directed to the combination with an audio frequency amplifier having the usual grid, filament and plate electrodes, of a source of alternating current, a rectifier, "*means* for supplying a negative potential to the grid electrode of said electron tube from said source of alternating current and *means* for supplying a positive potential to said plate electrode from said source of alternating current" whereby the amplifier operates without interference from the source of alternating current.

The specific form of "means" shown in the patent comprises *the parallel resistance 18 and condenser 19 in the grid* circuit, and the *condenser 20 in the plate circuit* whereby, notwithstanding the use of raw alternating current in the cathode heater circuit, the required potentials are maintained without creating excessive hum.

Claim 11 is specific to the resistance across the output side of the filter and carrying relatively large current compared with the load, i.e., relatively large rectified power current compared to the negligible value of the grid current, thus further serving to smooth out fluctuations in the grid current.

Claim 12 is a method claim directed to the method of applying filtered current to a resistance and impressing the voltage drop therefrom upon the tube.

The Petitioners' Infringing Amplifier.

The circuits employed in the several types of petitioners' receiving sets in the audio frequency portion are shown in detail in the Plaintiffs' Exhibit 77, sheets 1-4 inclusive (Vol. II, pp. 664-667). Dr. Lee has also shown them in simplified and elemental form in the Plaintiffs' Ex. 81 (Vol. II, p. 672).

For convenience we insert a copy of Plaintiffs' Ex. 95 (Vol. II, p. 734) colored by counsel, being a simplified diagram of petitioners' Model 109 receiver, which is typical of other models.

Plaintiffs' Exhibit No. 95.

(Simplified diagram of set SW 109.)

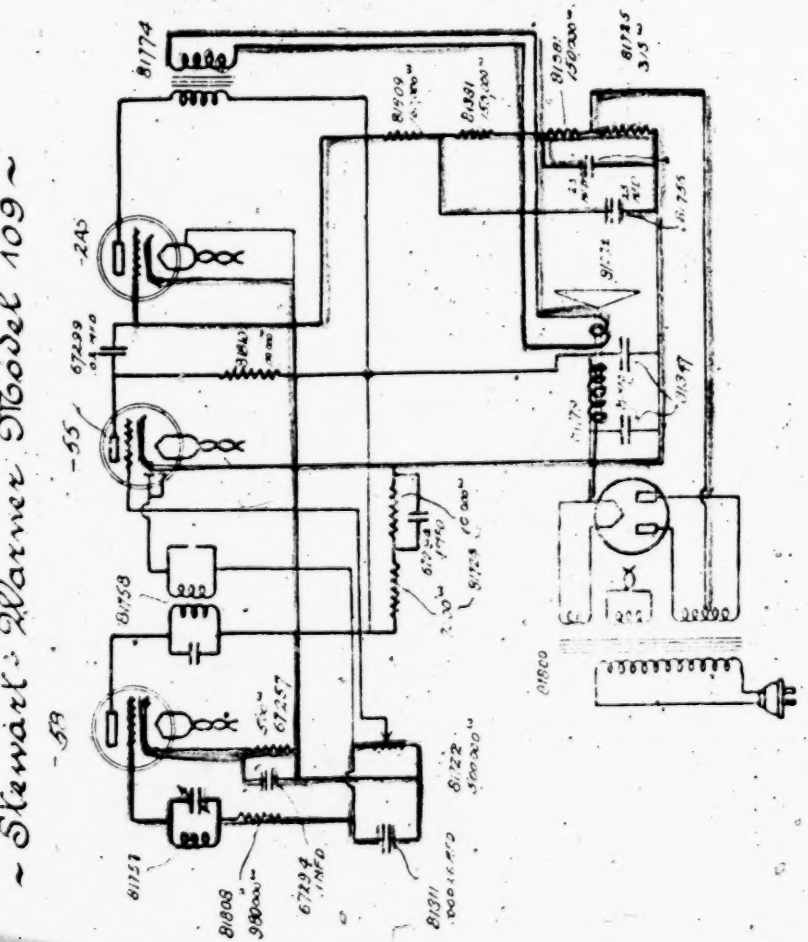

Rectified alternating current is delivered from the power output to the input circuit of tube —2A5, which circuit includes the grid of the tube and a high resistance shunted by a condenser whereby in operation the resistance functions to force the alternating current to charge the condenser which latter permits the signal current in the grid circuit to pass freely, and also functions to supply the necessary voltage drop and small supply of energy necessary to maintain the voltage drop on the grid. The circuit of the rectified alternating current in all of these models is from the plate of the rectifier to and through a resistance 81725, thence to the cathode, to the plate, and back to the cathode of the rectifier. Thus the rectified current is delivered across the terminals of a high resistance in the grid circuit shunted by a condenser, and operated to cause the combination to function as before described.

As in the Dunmore patent this operation is possible because of the power frequency being at the extreme lower end of the range of audible frequencis, whereas the speech and music frequencies are in general considerably above that range.

Model 109, therefore, infringes upon claim 9 of the patent.

Petitioners, to be sure, employ, in addition to the resistance and condenser above mentioned, a filter comprising an inductance coil and one or two condensers, in between the grid resistance and condenser and the power rectifier. But such filter is ineffective to remove all fluctuation from the output from the filter; indeed as appears from the proffered testimony (Vol. I, pp. 180-181) petitioners employ a relatively inexpensive filter having very substantial residual fluctuation, rather than go to the expense of using a filter which will smooth out the current to such an extent as to make it useful in the set without the use of respondents' inventions.

The Decision of the Circuit Court of Appeals for the Third Circuit with Respect to Patent 1,635,117.

In the previous litigation only claim 9 was involved.

This claim was upheld by Judge Morris in the District Court (*Dubilier Condenser Corp.* v. *Radio Corp.*, 34 Fed. (2d) 450), but was held to be invalid by the Circuit Court of Appeals (*Radio Corp.* v. *Dubilier Condenser Corp.*, 59 Fed. (2d) 309).

Judge Morris pointed out (p. 462) that there is no instance in the prior art of the employment of a resistance to obtain a negative grid potential in an amplifier tube operated from alternating current.

This fact is not controverted in the decision of the Circuit Court of Appeals, but interpreting the "means" of the claim to mean nothing more than a so-called "Hull" rectifier and filter* and that such Hull device transforms alternating current into a smooth current comparable to that from a battery, the Court held that all that Dunmore had done was merely to operate the tube by direct current in the same way in which tubes theretofore had been operated. The true construction of the claim should have identified the Hull device only as the "means" for supplying a positive potential to the plate circuit, and the resistance 18 shunted by condenser 19 as the "means" for supplying negative potential to the grid.

Contrary to this basic theory, the "Hull" rectifier and filter cannot smooth out the current to a degree comparable with the smooth direct current from a battery, except by the use of such a large number of filter elements as to make the cost prohibitive. In consequence manufacturers of commercial radio receivers use only a few filter elements and deliver to the grid and plate circuits rectified currents which pulsate to a degree which would give rise to substantial hum in the absence of preventative means.

The excluded evidence now before this Court under the provisions of Rule 46 shows (Vol. I, p. 253) that in fact the

*Hull patent 1,251,377, December 25, 1917, Vol. II, p. 547.

current "placed upon the grid circuit is not at all the steady direct current which is derived from a battery, but is a pulsating current, the voltage of which rises and falls in the same manner as in a true alternating current.

Respondents offered in the proffered testimony of Dr. Lee, to demonstrate this (Vol. I, p. 254). Mr. Lowell, in this proffered testimony, connected the phones and a loud speaker across the output from petitioners' filter, with the result that a pronounced hum from the fluctuations is audible (Lowell, Vol. I, pp. 254, 257).

In connection with the loud speaker patent 1,606,212 respondents did demonstrate their assertion in open Court upon the petitioners' Model 109 receiver (Pltffs.' Ex. 78) and are ready to make similar demonstration in this Court.

That the decision of the Circuit Court of Appeals for the Third Circuit would have been in favor of the patent if it had correctly understood the fact in this respect, is shown by the opinion of the Court, which indicates (p. 310) that the Court believed, as indeed the prior art did, that alternating current on the grid circuit would not do at all, for the Court said

> "substituted alternating current would not do the work of direct current in the tube."

And further (p. 310):

> "Here, as in the Lowell and Dunmore patent, there would be invention and a very important one had the patentee invented all its elements, or had he brought old elements into new cooperative function."

From these expressions it is clear that the Court felt that if Dunmore had in fact employed alternating current he would have accomplished the impossible, and that his combination in all its elements was not new. A part of the excluded evidence was that such elements are new (Vol. I, p. 262) and not shown in either the Heising or White patents referred to by the Court.

Yet, in point of fact Dunmore did not only apply raw alternating current to the filament but also applied alternat-

ing current to the grid and plate circuits, and his hum eliminating means attained successful operation.

A "Hull" filter would not accomplish the result, and no one before Dunmore even proposed its use for the purpose. Such a filter, as shown by the Hull patent (Vol. II, p. 776) employs only one or more inductance coils and condensers, no resistance. Nor would a resistance alone be sufficient, or a condenser alone. The two in shunt in the grid circuit cooperate in the peculiar manner previously set forth, *ante* p. 47.

Nor does Hull or any other reference disclose the resistance of relatively large value in combination with the filter as called for in claim 11, or the method of claim 12.

6. Lowell & Dunmore Patent 1,455,141.

This patent deals with the broad problem of operating the receiver from alternating current.

As previously pointed out (*ante*, pp. 41, 42) the sources of hum are numerous and the power from those sources greatly exceeds the signal energy. A simple test upon almost any commercial radio receiver will show that in spite of all efforts to the contrary, no so-called hum eliminating means can entirely eliminate the hum from the alternating power current frequencies which creep into all parts of the set. The test is to turn on the power for the receiver and detune it so that no signal can be heard. A noticeable hum from the power frequency will be audible; this is what is left from the original power sources after every effort has been made to reduce the value thereof. But when the instrument is tuned to a transmitting station the speech or music having been greatly amplified will be heard and the hum will be drowned out and disappears for all practical purposes.

Lowell and Dunmore taught how to hear the signal in spite of the ever present hum.

The novel idea of Lowell and Dunmore was gradually to build up the signal strength without impairing the modula-

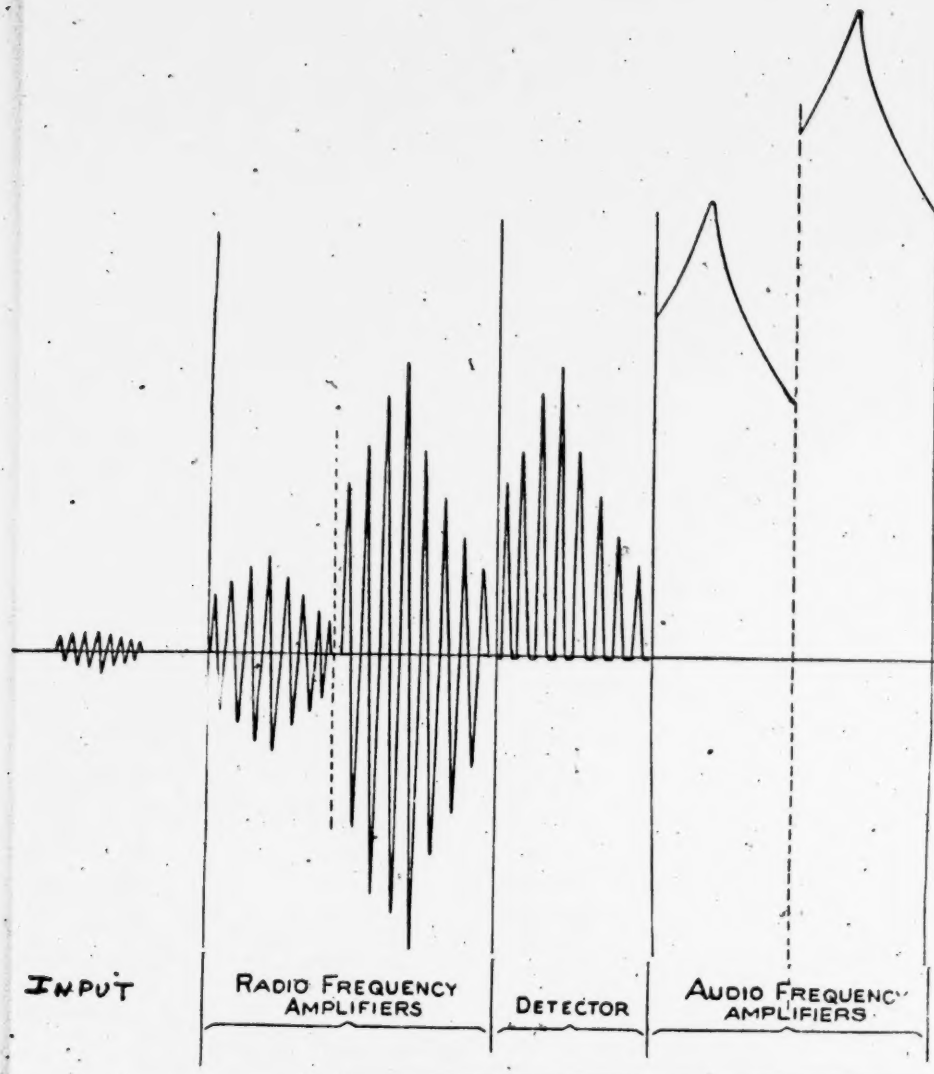
INPUT
RADIO FREQUENCY AMPLIFIERS
DETECTOR
AUDIO FREQUENCY AMPLIFIERS

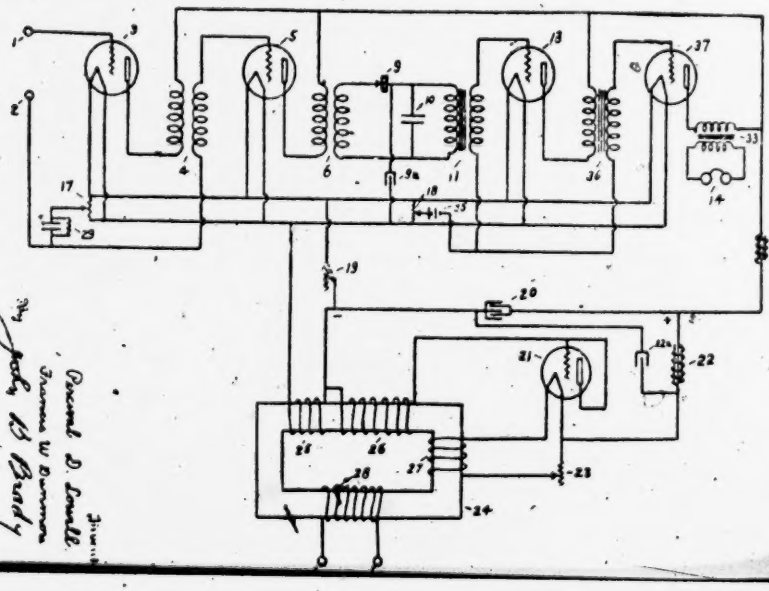
RADIO RECEIVING APPARATUS
Filed March 27 1922

tion while simultaneously keeping out power current frequencies as far as possible and straining out such power current frequencies as might enter the circuits, thus keeping the hum level down while building up the signal level. (Lee, Vol. I, pp. 241-245).

To this end the receiver is divided into three portions.

For convenience we insert opposite this page a copy of Fig. 1 of the patent to which we have added (above the patent drawing) a diagram indicating the changes in wave form effected by the different portions of the receiver.

In the first portion known as the *radio frequency amplifier*, the incoming weak signal is amplified in exactly the same form in which it is received, without distorting the modulation, and without excessive hum level.

The hum eliminating means necessary for doing this comprise (a) connecting the grids of the tubes to the midpoint of a resistor 17, whereby the grid is not subjected to the influence of variations of the cathode heating current. This prevents the signal frequency from operating on one or the other of the knees of the characteristic curve of the tube and so prevents distortion of the signal and also materially reduces 60-cycle hum appearing in the plate circuit in amplified form, although this latter cannot be wholly avoided since actually there is always a small remaining power frequency that cannot be avoided in this way (Lee, Vol. I, p. 242); (b) the resistor 29 shunted by a condenser, whereby there is a drop in potential in the grid circuit, the effect of which is to impose the necessary bias upon the grid to cause the tube to act as an amplifier; the condenser functioning to smooth out fluctuations in that circuit; and (c) one or more radio frequency transformers 4, 6 which couple the radio frequency amplifier to the detector, whereby only radio frequencies are permitted to pass through the transformer and the unavoidable hum frequency (i.e., 60 or 120-cycle frequency) cannot pass, and hence there is delivered to the detector a strengthened undistorted signal with a relatively low level, or no level, of residual hum frequency.

The next portion of the instrument is the *detector* portion. Here the high frequency modulated current is detected, i.e., one half of each cycle of current is suppressed, as above shown with respect to the crystal set and the regenerative set. Lowell and Dunmore show in their drawings a crystal detector which has the advantage over a tube in that it does not itself inherently create hum as does the rise and fall of cathode temperature caused by applying alternative current to the cathode; the specification of the patent, however, states (p. 2, lines 26-58) that a tube may be used, although subject to the disadvantages mentioned.

In this portion of the instrument, the hum eliminating means comprise, (a) a detector which does not inherently create hum itself, and (b) a means such as the condenser 9-A adapted to strain out such power current frequencies as may be induced in the circuit. Thus in this portion of the instrument Lowell and Dunmore again avoid distortion of the modulation, and as far as possible avoid the introduction of hum from the power circuit and to the extent introduced, drain it off.

In the *audio frequency* amplifier portion of the instrument the signal which has now been built up to a much greater level than the probable level of any hum frequency that may be introduced above in spite of the hum eliminating means, i.e., connecting the grid circuit to a point in the cathode not affected by the alternating current. In consequence any residual hum is drowned out by the signal and will not be heard.

Thus Lowell & Dunmore accepted the impossibility of keeping hum out of the several parts of the instrument, except at prohibitive cost, and devised their instrument so that it operates in spite of the disadvantage.

The Claims in Suit.

Claims 1 to 4 and claims 13 and 14 are in suit.

Claim 1 is for the broad idea of the radio frequency amplifier followed by a detector, and hum eliminating means

in circuit with the amplifying means, which hum eliminating means, under well known rules of construction regardless of the language used in the claims, must be the same or substantially the same as the means shown in the patent.

Claim 2 is also to the combination of the radio frequency amplifier and a detector, but there is the additional limitation that the means for eliminating hum shall be connected to both the amplifying and the rectifying means, thereby implying the necessity of means such as a crystal or a tube adapted inherently not to create hum, and means for draining off such power frequencies as may be induced in the circuit.

Claim 3 includes as an additional limitation that there shall be an amplifier for the audio frequencies and that there shall be *"separate"* means connected to each of the amplifying and rectifying means for eliminating hum thus requiring the foregoing hum eliminating means for the radio frequency amplifier and the rectifier and means in the audio frequency portion, such as the midpoint connection, for keeping out power current frequencies.

Claim 4 likewise includes the above three portions of the instrument and calls for hum eliminating means for each portion of the instrument.

Claim 13 calls for the same three portions of the instrument and in addition means for rectifying the energy from the power supply and also the *"separate"* means for eliminating hum called for in claim 3.

Claim 14, like claim 13, calls for the three portions of the instrument, the rectifying means and also the *"separate"* means in each of the circuits for eliminating hum.

Infringement of Patent 1,455,141

All of the appellees' receivers are of the so-called superheterodyne type. This type of set is illustrated fundamentally in the diagram Pltffs' Ex. 76, Vol. II, p. 663.

In this type of receiver the incoming signal at high frequency is usually, although not always, first amplified;

whether amplified or not, it is delivered to the input of a "converter" tube, the grid circuit of which receives not only the modulated carrier wave but also a local frequency derived from an "oscillator" tube. In the example shown the frequency of the modulated carrier input to the "converter" is 1060 kilocycles, whereas the frequency from the oscillator tube is a different frequency such that the two frequencies result in the production of a beat note frequency of, say, 177 kilocycles in the output of the converter. This frequency is known as the *intermediate* frequency. It is so high that it is inaudible, and therefore, must be rectified, i. e., detected, before it can be heard. Therefore the output from the converter is passed through an amplifier tube, then a detector tube and then through an audio frequency amplifier. We may therefore, in the consideration of appellees' sets, disregard that portion of the receiving apparatus which precedes the amplifier for the intermediate frequency, and consider only the intermediate (i. e., high) frequency amplifier portion, the detector portion and the audio frequency portion.

The model 109, respondent's receiver (see page 49 hereof) is typical.

Like the other types of appellees' sets, this set has indirect heated tubes, wherein the cathode is separated from the heater circuit by a material having suitable heat lag, thus causing the cathode to remain at nearly constant temperature in spite of variations in the heating current. Thus connecting the grid to the indirect heated cathode operates in the same manner as connecting it to the midpoint of a direct heated cathode, i. e., in both cases the grid is connected to a point on the cathode not subjected to the influence of variations of the heating current.

Like all of the other sets in controversy the set includes the amplifier portion for the "intermediate", (i. e., radio) signal energy; a means for rectifying this energy; and a means for amplifying the resulting audio frequency.

As in the other sets in controversy raw alternating current is applied to each of the circuits for heating the

cathodes, which heater circuits constitute effective transmitters of power frequency waves which induce currents of similar frequency in the adjacent conductors.

In *the radio frequency portion* of the instrument, the grid circuit of the radio frequency amplifier is not only connected to a point on the cathode not subject to variations in the heater current, but also includes a resistance shunted by a condenser (indicated in the 109 set by resistance 67257 and condenser 67294). Also in this portion the coupling transformer 81758 prevents power frequency current from passing to the detector. Thus in the radio frequency portion the level of the signal frequency is raised without distortion of the modulation signal and the introduction of power frequency is minimized, and such power frequency as enters at this portion is strained out by the transformer.

In the *detector portion of the instrument* the cathode of the 55 tube is indirectly heated whereby the tube acts in precisely the same manner as the crystal which does not create hum.

Thereby the portions of the set thus far described infringe upon claims 1 and 2 which are directed toward the combination wherein the high frequency signal is raised to high level without distortion in spite of being surrounded by unavoidable power frequencies and whereby the high level signal is separated from the power frequencies and delivered to the detector.

In the *audio amplifier portion* of the instrument the grid circuit of the 2A5 tube is connected through resistances 81809, 81381, 81725, to the circuit of the indirect heated cathode, thereby connecting the grid to a point on the cathode not subjected to the influence of variations of the cathode heating current.

Thus the receiver also infringes upon claims 3, 4, 13 and 14 which bring in the audio frequency amplifier portion and also bring in the feature of separation of the hum eliminating means in the several parts of the set.

Thereby the set as a whole not only delivers an undistorted strengthened signal but the level of power frequency

is kept down in the detector and there is delivered to the audio frequency portion of the instrument a strengthened undistorted signal having a level well above the hum frequency and in the audio frequency portion the level of unavoidable power frequency is again kept down to a minimum and since this power frequency is in the lower range of the audible frequencies carried by the signal, the result is that the powerful audio amplifier operates so that in spite of the fact that in the best instrument obtainable after all precautions have been taken to remove power frequency hum as much as possible, a hum can be heard when no signal is coming in but when the signal does come in only the desired speech and music is heard.

The Decisions of the Courts in Third Circuit With Respect to Patent 1,455,141.

The decision in the Third Circuit is in point only with respect to the limited claims 3 and 14 relating to the *separate* means for eliminating hum.

With respect to these claims Judge Hugh M. Morris in the District Court, after a careful analysis of the history of the inventions and the prior art, held (*Dubilier Condenser Corp.* v. *Radio Corporation of America,* 34 Fed. [2d] 450, 457):

> "Dr. Lee testified that the patentees' arrangement of the hum-eliminating means 'prevents the hum from becoming cumulative through the sets. It also has a great benefit, in that you can operate the various sections of each set adaptable to their maximum efficiency by selecting tubes suitable for each purpose and rectifying the hum in those sections to the best advantage.' Other witnesses testified to the same general effect. * * * *
> * * * I think the claims are valid."

The Circuit Court of Appeals reversed this holding in an opinion by Judge Woolley (*Radio Corporation of America* v. *Dubilier Condenser Corporation,* 59 Fed. [2d] 305). In

this opinion the Court treats the element "(f)", i. e., separate means, etc. for eliminating hum, as comprising nothing more than an old midpoint connection shown in Heising and White (Vol. II, p. 780) to stop the hum *at the source* in each portion of the instrument, whereby each portion of the instrument operates in the same way regardless of whether such portion operated separately or collectively.

Judge Woolley summed up the matter by stating (p. 307):

> "Therefore, in the final analysis, the claimed invention consists in applying *curbed alternating current* to the detector section and the audio frequency amplifier section and also to the radio frequency amplifier section in the same way that it had previously been applied to the last named section. Is this invention?" (Emphasis by counsel).

And further (p. 308):

> "So it appears that each eliminator performs in the apparatus of the combination claim the same function it performed in the device from which it was taken, *Motion Pictures Patents Co.* v. *Caleluff (C. C. A.)* 251 F, 598, 602; that is, *each does its own work in its own section and is through.* The result, in theory at least, is complete hum prevention or elimination in each section by each eliminator. It follows that *the effect of the operation of all the eliminators is an aggregation of separate results, Powers Kennedy Corp* v. *Concrete Co.*, 282 U. S. 175, 186, 51 S. Ct. 95, 75 L. Ed. 278, all alike and all admittedly obtained by prior art means. *From the very nature of the circuit connections, the three eliminators act independently of one another, Hailes* v. *Van Wormer*, 2 Wall. (89 U. S.) 353, 22 L. Ed. 241. *Operating separately yet in conjunction with other elements of the combination, they evolve no new cooperative function, Grinnell Washing Machine Co.* v. *Johnson Co.*, 247 U. S. 426, 433, 38 S. Ct. 547, 62 L. Ed. 1196; *Office Specialty Mfg. Co.* v. *Fenton Metallic Mfg. Co.*, 174 U. S. 492, 498, 19 S. Ct. 641, 43 L. Ed. 1058, and the new result, as claimed, is only that which arises from the well-known operation

of each one of the several elements of the combination, *Grinnell Washing Machine Co.* v. *Johnson Co.*, supra." (Emphasis by counsel).

This purely theoretical analysis not only has nothing to do with the basic and novel idea of initially building up the signal frequency without distorting it and separating such amplified signal energy from such power frequencies as may have entered, and then further progressively building up the signal strength in the several portions of the instrument while keeping out and straining out power frequencies so that they are kept down in amplitude and finally such as are present are drowned out, but is wrong in point of fact.

It is but fair to say that in the record before the Court in the previous case the operation in this respect was not clearly apparent.

But in the case at bar the excluded evidence and demonstration clearly shows that connecting the grid circuit to the midpoint of the cathode heater circuit, while effective to a large degree in preventing upbalancing of the voltage in the grid circuit, *cannot prevent some fluctuation* (Lee, Vol. I, p. 242) and this small fluctuation greatly amplified in the tube.

If the theoretical assumption forming the basis of the decision of the Circuit Court of Appeals for the Third Circuit to the effect that Lowell and Dunmore merely used in each stage the same old hum eliminating means were correct, the early regenerative receivers could have been made humless by the simple process of connecting the grids of the tubes to the midpoint of the cathode heater circuit. Such an arrangement in fact would only amplify and reamplify the residual hum to such an extent as to make the instrument useless. Had such a thing been possible obviously the regenerative set would have been operated by alternating current.

The excluded evidence included a demonstration of Exhibit 68 (Vol. I, pp. 247-248) which can be repeated here,

that notwithstanding the presence in each portion of the instrument, in spite of all efforts to the contrary, that these residual frequencies are not added together as one would expect in the case of an aggregation but actually diminish.

In the ***radio frequency amplifier*** portion of the instrument the signal frequency is very weak whereas the power frequency is relatively strong. By listening in on the phones tapped in at the output of this portion taken *separately* all that will be heard will be the residual hum, or at most some modulation accompanied by substantial hum. (Lee, Vol. I, p. 247).

At the *detector portion* taken *separately,* normally all that would be heard would be a faint signal which, unless preceded by signal amplification, would be drowned out or nearly drowned by residual hum; if preceded by amplificatibn normally adding the two together would merely increase the hum.

Yet coupling the two parts together by the radio frequency transformer, the result is *less* hum instead of more. The new combination keeps the hum level down while raising the signal strength and then straining out hum frequency.

This is the combination of claims 1 and 2 for which there is no anticipation, and which complies with all of the requirements of a true combination as distinguished from a mere aggregation.

Also the *audio frequency* portion of the instrument separately, if powered by alternating current would be useless. It becomes useful only when preceded by the foregoing radio amplifier, and detector, portions.

These matters not only appear in the testimony offered and excluded at the trial, but are capable of audible demonstration upon the apparatus offered.

It is, therefore, not the fact that each eliminator performs in the apparatus of the combination only the same function which it performed in the device from which it was taken. No hum eliminating means of the prior art was

arranged or adapted to strengthen the signal without distortion of the modulation and to strain out 60-cycle frequencies before delivery to the detector. No hum eliminating means of the prior art was adapted to permit rectification without distortion and drain off unwanted 60-cycle frequency before passing the rectified signal through the audio transformer and no hum eliminating means were arranged to operate in an audio frequency amplifier prior to Lowell and Dunmore. The application of alternating current to the audio frequency portion of the instrument was made possible only by Lowell and Dunmore's invention of first delivering to the detector an undistorted high frequency modulation from which power frequencies had been strained out by the transformer 4-6, and making the undistorted radio frequency so powerful that any 60-cycle frequency introduced at the audio portion would be drowned out by the signal.

Had the Circuit Court of Appeals not made the mistaken assumption of fact that nothing more was involved than the mere separation of parts containing already old hum eliminating means, it is believed to be clear from their opinion that the claims would have been upheld. This is shown by the language at p. 307:

> "It might be invention if, when operating, some hum should develop in the first section and pass over to the second section, or if hum in these two sections should invade the third section and be suppressed before it reaches the loud speaker by the three hum eliminators co-acting to that end. In other words, there might be invention if the hum eliminators, though separately placed, functioned together on the circuits of all sections in eliminating wandering hum."

Indeed in the earlier part of the opinion the Court said (p. 307):

> "This is a highly scientific organization, and this is what Lowell and Dunmore say they invented. Looking at it as they disclose it, that is, looking at

> it close up without looking at its background, it would appeal to any one as invention. If they had invented this apparatus and all its elements, their invention unquestionably would have been basic; it would have been more than that; it would have been stupendous, for it would have covered the major portion of the practical radio art as it stands today. But they did not invent all of these elements; indeed, they frankly admit they did not. What then is the invention?

Had the Circuit Court of Appeals been fully informed as to the basic facts showing how Lowell and Dunmore first divided the instrument into its component parts, and then applied the hum eliminating means to each part in such manner as to cause the combined three parts to operate to produce a result wholly unattainable by any of the parts individually and an operation in each part wholly different from the mere duplication of hum eliminating means in each part, it is believed to be clear that the result of the decision of the Circuit Court of Appeals for the Third Circuit would have been quite different from what it was.

In short, the reasoning of the Circuit Court of Appeals applied to the facts as they are, instead of what the Circuit Court of Appeals thought them to be, must, we submit, lead to an entirely different conclusion.

FILE COPY

Supreme Court of the United States

October Term, 1935

No. 388

A. G. Triplett, R. M. Triplett, A. Nelson, C. M. Triplett, Jr., and The Baltimore Gaslight Company,

Petitioners,

vs.

Percival D. Lowell, Francis W. Dunmore, and Dubilier Condenser Corporation,

Respondents.

PETITION.

Samuel E. Darby, Jr.,
Counsel for Petitioners.

Supreme Court of the United States

October Term, 1935

No. 388

A. G. TRIPLETT, R. M. TRIPLETT, A. NELSON, C. M. TRIPLETT, JR., and THE BALTIMORE GASLIGHT COMPANY,

Petitioners,

vs.

PERCIVAL D. LOWELL, FRANCIS W. DUNMORE, and DUBILIER CONDENSER CORPORATION,

Respondents.

PETITION.

To the Honorable, the Chief Justice and Associate Justices of the Supreme Court of the United States:

Your petitioners respectfully show:

1. That on the 21st day of August, 1935, petitioners filed a petition for writ of certiorari in this cause directed to the United States Circuit Court of Appeals for the Fourth Circuit.

2. The issues of the case on which review by this Court was sought, had to do with the interpretation and application of the disclaimer sections of the statute (Sections 4917 and 4922 R. S.). It was believed, that the Court of Appeals for the Fourth Circuit had rendered a decision involving the construction and application of the disclaimer sections

of the statute which was in conflict with the decisions of this Court in *Ensten* v. *Simon Ascher & Co.*, 282 U. S. 455 and in *Altoona Publix Theatres* v. *American Tri-Ergon*, 294 U. S. 477, as well as in conflict with the rule under these sections of the statute established in the Second Judicial Circuit.

3. On October 14th, 1935, this Court denied the writ of certiorari prayed for.

4. Within the past week counsel for petitioners has learned that the United States Circuit Court of Appeals for the Seventh Circuit, on October 30th, 1935, rendered a decision in *The Mantle Lamp Company of America* v. *Aluminum Products Company* in which the Circuit Court of Appeals certified to this Court three questions directed to issues with which your petitioners' case is immediately concerned, viz: the interpretation and application of the disclaimer sections of the statute. The certificate in this case was docketed in this Court on November 16, 1935, as No. 590.

5. That the questions so certified to this Court by the Court of Appeals for the Seventh Circuit are as follows:

> "(1) Where certain but not all of the claims of a patent are in suit, and all of the claims in suit are held and decreed to be invalid pursuant to a finding and judgment to that effect of the Circuit Court of Appeals of the Circuit, may the owner of the patent maintain a suit afterward brought thereon in the same judicial circuit as that in which the first cause was decided, and against a different defendant not involved in the first suit—the second suit being based on the claims held in the prior suit to be invalid and on other claims of the same patent not previously adjudicated—where the owner of the patent wholly failed and omitted to file any disclaimer of the claims

held in the first suit to be invalid, and where, between entry of decree of invalidity of the claims in the first suit and the bringing of the second suit in the same circuit, reasonable time had elapsed for filing such disclaimer?

(2) If question 1 is answered in the affirmative, does the intervention of a period of approximately five years between the final judgment in the first suit and the institution in the same circuit of the second suit constitute delay so unreasonable as to bar the second suit for want of disclaimer of the claims which had been held to be invalid?

(3) If question 2 is answered affirmatively, may the institution or pendency of other suits in another judicial circuit or circuits after entry of final decree in the first suit, based on claims of the patent so held invalid and on other claims thereof not previously adjudicated to be invalid, excuse the failure to file disclaimer of the claims held invalid prior to instituting the later suit in the same circuit?"

6. That these questions are apparently limited to the case where a patentee, with claims finally held invalid by the Circuit Court of Appeals, thereafter institutes a suit on the invalid claims *in the same Circuit.* The same question is sought to be determined by petitioners in the case where the patentee institutes a suit on the invalid claims, long after the final adjudication of invalidity, in a Circuit *other* than that in which the final judgment of invalidity was rendered.

7. That in the instant case your petitioners have just received from the Clerk of the Circuit Court of Appeals for the Fourth Circuit an attested copy of an order of that Court entered on November 20th, 1935 (a copy of which is reproduced at the end hereof), wherein the mandate of the Court was recalled and the decree of the Court entered in

the case on the 4th day of June, 1935, was "set aside and annulled" and a new and different decree of the Court entered on November 20th.

8. In the belief that petitioners are entitled to petition this Court to allow an appeal from this new decree within the time allowed by law, subsequent to the entry thereof, petitioners present this present petition for leave to renew their petition heretofore filed on August 21, 1935, on the record of the case filed with the original petition and for a writ of certiorari.

9. That counsel for your petitioners has just been informed that petitioners' case has been set for trial commencing January 6th, 1936, in the District Court of Maryland, and that a long, expensive, technical trial can be avoided if a writ of certiorari is granted in this cause.

10. The issues on the merits involved in petitioners' case are so closely similar to the questions involved in the case of *The Mantle Lamp Company of America* v. *Aluminum Products Company* which has been certified to this Court by the Court of Appeals for the Seventh Circuit that the case may be disposed of on its merits at the same time.

WHEREFORE your petitioners pray that the present petition to permit renewal of their petition for writ of certiorari, as well as for the writ of certiorari, be granted.

Respectfully submitted,

SAMUEL E. DARBY, JR.,
Counsel for Petitioners.

Dated: New York, N. Y.,
November 22, 1935.

UNITED STATES CIRCUIT COURT OF APPEALS,

FOURTH CIRCUIT.

No. 3816.

Percival D. Lowell, Francis W. Dunmore and Dubilier Condenser Corporation,
Appellants and Cross-Appellees,

vs.

A. G. Triplett, R. M. Triplett, A. Nelson, C. M. Triplett, Jr., and The Baltimore Gaslight Company,
Appellees and Cross-Appellants.

CROSS-APPEAL from the District Court of the United States for the District of Maryland.

THE MANDATE OF THIS COURT, issued in the above entitled cause on the 5th day of July, 1935, having been recalled in pursuance of the motion of the appellants and cross-appellees, filed in this cause on August 6, 1935, to recall and amend said mandate by striking therefrom the words "and that the costs be paid by the appellants and cross-appellees" and by inserting in lieu thereof "and that the costs be paid by the appellees and cross-appellants",

IT IS ORDERED BY THIS COURT that the decree of this Court, entered in this cause on the 4th day of June, 1935, be, and the same is hereby, set aside and annulled.

IT IS FURTHER ORDERED, ADJUDGED and DECREED by this Court that the decree of the said District Court, in this

cause, be, and the same is hereby, reversed; that this cause be, and the same is hereby, remanded to the District Court of the United States for the District of Maryland, at Baltimore, for further proceedings in accordance with the opinion of the Court filed herein on June 3, 1935; and that the costs in this Court be divided equally between the appellants and cross-appellees and the appellees and cross-appellants. Let mandate issue forthwith.

November 20, 1935.

MORRIS A. SOPER
U. S. Circuit Judge.

A true copy,
Teste:

CLAUDE M. DEAN Clerk,
U. S. Circuit Court of Appeals,
Fourth Circuit.

FILE COPY

Office - Supreme Court, U.
FILED
APR 21 1936
CHARLES ELMORE CROPLEY
CLERK

Supreme Court of the United States

October Term, 1935.

No. 388.

A. G. TRIPLETT, R. M. TRIPLETT, A. NELSON, C. M. TRIPLETT, JR., and THE BALTIMORE GASLIGHT COMPANY,
Defendants-Petitioners,

vs.

PERCIVAL D. LOWELL, FRANCIS W. DUNMORE, and DUBILIER CONDENSER CORPORATION,
Plaintiffs-Respondents.

PETITION FOR REHEARING.

SAMUEL E. DARBY, JR.,
Counsel for Petitioners.

Supreme Court of the United States

October Term, 1935.

No. 388.

A. G. TRIPLETT, R. M. TRIPLETT, A. NELSON, C. M. TRIPLETT, JR., and THE BALTIMORE GASLIGHT COMPANY,
Defendants-Petitioners,

vs.

PERCIVAL D. LOWELL, FRANCIS W. DUNMORE, and DUBILIER CONDENSER CORPORATION,
Plaintiffs-Respondents.

PETITION FOR REHEARING.

To the Honorable, the Chief Justice and Associate Justices of the Supreme Court of the United States:

This cause was argued on March 4th and 5th, 1936, and decided March 30th, 1936 (80 L. Ed., p. 594).

As stated in the opinion of the Court, certiorari was granted in the cause to resolve questions as to the scope and effect of the disclaimer statutes raised in a suit brought to enjoin infringement of several patent claims, some of which had previously been held invalid in an infringement suit in another Circuit against different defendants.

A rehearing of the case is respectfully requested for the following reasons:

1. The Court did not decide a question raised by the petition for writ of certiorari, and presented both orally

and in petitioners' brief. To the contrary, the Court stated in its opinion:

> "We did not decide whether the purported disclaimers operate to enlarge the claims in such fashion as to render both the old and the new claims invalid by virtue of the reissue statute. (See Altoona Publix Theatres vs. American Tri-Ergon Corp, supra, 294 U. S. 490-492; 79 L. Ed. 1003-1015; 55 S. Ct. 455) That question is not presented by the petition for certiorari. The Courts below do not appear to have passed upon it and it may be unnecessary to decide it on the new trial."

We believe that in making the foregoing statement and not deciding this question, which was dispositive of the instant case and if decided favorably to petitioners' contention would have eliminated the necessity of a long, expensive, technical trial on the merits, the Court overlooked the second ground urged for the granting of the petition (see petition for writ of certiorari, pp. 5 and 6) and the argument based thereon in the brief (pp. 13 and 14) which was expressly directed to that point, and the decision of this Court in *Altoona Publix Theatres* v. *American Tri-Ergon Corp.* was quoted from in support thereof.

2. Under the decision of the Court rendered in the present case it is apparently the opinion of the Court that when certain claims of a patent have been held invalid in one suit it is not necessary that a second suit should be brought within a reasonable time, but may be brought at any time before the patent expires. Inasmuch as there are ten Circuit Courts of Appeals it would thereby be possible for a patentee, some of the claims of whose patent have been held invalid in one Circuit, to proceed in all of the remaining Circuits before a time would be reached when his claims would have been finally invalidated. This con-

clusion is in such apparent conflict, in this respect, with the earlier decision of this Court in *Ensten* v. *Simon Ascher & Co.*, 282 U. S. 455, that because of the fact that the earlier decision in the *Ensten* case is referred to in the present opinion as presenting "a different question" it is believed that the Court may have overlooked that in practical effect its decision in the present case overrules its prior decision in *Ensten* case.

Thus, in the *Ensten* case the purpose and intent of the disclaimer statute was fully discussed, and it was therein pointed out that it was *the interest of the public* that prompted the conclusion that—

> "when a competent Court has declared his (the patentee's) pretentions without sufficient foundation, *we think good faith and the spirit of the enactment demand that he act with such promptness as the circumstances permit* either to vindicate his position or *relieve the public from further evil effects of his false assertion*".

Under the decision of the Court in the case at bar, obviously it is left entirely to the election of the patentee as to when, if ever, the public may be relieved "from further ill effects" of the patentee's "false assertion".

It is believed, in the absence of express statement to that effect in the present opinion of the Court, and further, because of the fact that the Court refers to its prior decision in the *Ensten* case as presenting "a different question" it was not the intention of the Court to overrule its prior decision. The result of the present opinion, however, as is apparent from its study, does overrule the prior decision in practical effect.

In view of the extent to which the opinion of this Court in the *Ensten* case has been applied and followed in patent

infringement cases it will be apparent that extensive confusion will result in pending and future patent suits if the situation is not clarified.

Conclusion.

For the foregoing reasons, therefore, it is earnestly urged that a rehearing be granted in this cause for the purpose of clarifying the scope and application of the disclaimer statutes on pending and future litigations.

Respectfully submitted,

SAMUEL E. DARBY, JR.,
Counsel for Petitioners.

New York, N. Y., April 20, 1936.

Certification.

I hereby certify that the foregoing petition is presented in good faith and not for delay.

SAMUEL E. DARBY, JR.

FILE COPY

Supreme Court of the United States

OCTOBER TERM, 1935

A. G. TRIPLETT, R. M. TRIPLETT, A. NELSON, C. M. TRIPLETT, JR., AND THE BALTIMORE GASLIGHT COMPANY,
Petitioners,
vs.
PERCIVAL D. LOWELL, FRANCIS W. DUNMORE, and DUBILIER CONDENSER CORPORATION,
Respondents.

No. 388

BRIEF FOR RESPONDENTS IN OPPOSITION TO RENEWAL OF PETITION FOR WRIT OF CERTIORARI

CLIFTON V. EDWARDS,
GAYLORD LEE CLARK,
JOHN B. BRADY,
Of Counsel for Respondent

Supreme Court of the United States

October Term, 1935.

A. G. TRIPLETT, R. M. TRIPLETT, A. NELSON, C. M. TRIPLETT, JR., AND THE BALTIMORE GASLIGHT COMPANY,
Petitioners,

vs.

PERCIVAL D. LOWELL, FRANCIS W. DUNMORE AND DUBILIER CONDENSER CORPORATION,
Respondents.

BRIEF FOR RESPONDENTS IN OPPOSITION TO RENEWAL OF PETITION FOR WRIT OF CERTIORARI.

In the case of *Mantle Lamp Co. of America* vs. *Aluminum Products Company* (No. 590, October Term, 1935), referred to in petitioners' petition, the Circuit Court of Appeals for the Seventh Circuit in 1927 held certain claims invalid and no application was made for writ of certiorari. Thus plaintiff had proceeded as far as it could in the Seventh Circuit, the highest court in that circuit having given its pronouncement.

After five or six years plaintiff sought to have the same court review its finding in another suit against a different defendant, urging that activity in the Sixth Circuit mean-

while justified such action. Apparently no question was raised as to the propriety of the litigation in the Sixth Circuit, and the Circuit Court of Appeals for the Seventh Circuit (petition, p. 3, par. [2]) did not rule upon whether or not the delay, even of five or six years, was unreasonable. The question presented therefore is as to what attitude the Circuit Court of Appeals for the Seventh Circuit should take in its own circuit, i. e., "in the same judicial circuit as that in which the first cause was decided" (Petition, p. 2), in view of its own earlier decision.

In the case at bar, the question involved was one of fact, i.e., whether there was unreasonable delay under the circumstances of the case, and both the District Court and the Circuit Court of Appeals held that in fact there was no unreasonable delay.

It is therefore believed that regardless of the decision arrived at by this Court in answer to the questions certified by the Seventh Circuit, such answers would not be determinative of the correctness of the decision of this Court denying petitioners' petition for writ of certiorari.

The order of the Circuit Court of Appeals for the Fourth Circuit entered November 20, 1935 (Vol. I, pp. 433, 436) made no change in its decree of June 4, 1935, except to divide the costs equally between the parties instead of assessing the costs against appellants and cross-appellees.

Respectfully submitted,

CLIFTON V. EDWARDS,
GAYLORD LEE CLARK,
JOHN B. BRADY,
Of Counsel for Respondent.

December 2, 1935.

Vol. II

TRANSCRIPT OF RECORD

Supreme Court of the United States

OCTOBER TERM, 1935

No. 388

A. G. TRIPLETT, R. M. TRIPLETT, A. NELSON, ET AL., PETITIONERS,

vs.

PERCIVAL D. LOWELL, FRANCIS W. DUNMORE, AND DUBILIER CONDENSER CORPORATION

ON WRIT OF CERTIORARI TO THE UNITED STATES CIRCUIT COURT OF APPEALS FOR THE FOURTH CIRCUIT

PETITION FOR CERTIORARI FILED AUGUST 21, 1935.

CERTIORARI GRANTED DECEMBER 9, 1935.

SUPREME COURT OF THE UNITED STATES

OCTOBER TERM, 1935

No.

A. G. TRIPLETT, R. M. TRIPLETT, A. NELSON, ET AL., PETITIONERS,

vs.

PERCIVAL D. LOWELL, FRANCIS W. DUNMORE AND DUBILIER CONDENSER CORPORATION.

ON PETITION FOR A WRIT OF CERTIORARI TO THE UNITED STATES CIRCUIT COURT OF APPEALS FOR THE FOURTH CIRCUIT.

VOL II

INDEX.

	Original	Print
Patent 1,455,141 to Lowell & Dunmore, referred to in par. 6 of the bill of complaint	2	439
Patent 1,635,117 to Francis W. Dunmore, referred to in par. 10 of the bill of complaint	12	449
Exhibits attached to plaintiff's affidavit in opposition to motion to dismiss bill of complaint	24–170	459
Exhibit "A" (copy of the decisions of the Board of Appeals of the Patent Office, affirming the decisions of the Examiner of Interferences awarding priority of invention to affiants)	24	459
Exhibit "B" (printed copies of the complaints and answers in the aforesaid suits of the United States against the Dubilier Condenser Corporation, Morkrum Company, Percival D. Lowell and Francis W. Dunmore, in which the Government sought to obtain title to the invention)	48	474

JUDD & DETWEILER (INC.), PRINTERS, WASHINGTON, D. C., JULY 25, 1935.

—6689-C

	Original	Print
Exhibit "C" (certified copy of the motions for dismissal and orders of dismissal in the Supreme Court for the District of Columbia in the aforesaid suits of United States vs. Francis W. Dunmore, Albert S. Blatterman vs. Percival D. Lowell and Francis W. Dunmore and Wired Radio, Inc., and Robert D. Duncan, Jr., vs. Percival D. Lowell, Francis W. Dunmore, Albert S. Blatterman and Westinghouse Electric & Manufacturing Company)	132	537
Exhibit "D" (certified copy of motion and order of dismissal entered July 3, 1933, in the aforesaid suit of the United States vs. Percival D. Lowell in the Eastern District of New York)	144	546
Exhibit "E" (certified copy of motion for dismissal and order of dismissal of July 3, 1933, in the above mentioned suit of United States vs. Percival D. Lowell, No. 4935, in the Eastern District of New York)	146	548
Exhibit "F" (copies of bills of complaint and answers in the Blatterman and Wired Radio (4915) suits)	148	549
Plaintiffs' Exhibits—		
No. 4 (License agreement between Dubilier Condenser & Radio Corp. and Dunmore and Lowell)	171	570
7 (Dubilier catalogue describing Super-Ducon)	183	583
7a (Blueprint of wiring diagram of Super-Ducon)	199	591
15 (Photograph Type A relay)	201	592
16 (Wiring diagram of Type A relay)	203	593
17 (Photograph of Bureau of Standards Set)	211	597
18 (Wiring diagram of Bureau of Standards Set)	213	598
21 (Newspaper and periodical articles)	215–248	599
21 (Radio Broadcast, October, 1922)	215	599
(New York Times, April 25, 1922)	217	600
(Washington Herald, April 14, 1922)	219	601
(New York Globe, April 25, 1922)	221	602
(Washington Post, April 25, 1922)	223	603
(Washington Star, April 24, 1922)	225	604
(A. I. E. E. Journal, Dec., 1922, page 488)	227	605
(A. I. E. E. Journal, Dec., 1922, page 489)	229	606
(A. I. E. E. Journal, Dec., 1922, page 490)	231	607
(Radio for September, 1922, page 27)	233	608
(Radio for September, 1922, page 28)	235	609
(Q. S. T., October, 1922, pages 32 and 33)	239	613
(Q. S. T., October, 1922, pages 34 and 35)	241	614
(Radio News, September, 1922, page 441)	243	615
(Telephone, September 16, 1922, page 21)	245	616
(Telephone, September 16, 1922, page 22)	247	617
22 (Photograph of Type B relay)	249	618
29 (Photograph of Dunmore's laboratory at home)	251	619
47 (Photograph of box type)	253	620
49 (Photograph of Freed-Eisemann set wired for A. C. and rectifier)	255	621

		Original	Print
50	(Diagram of Lowell & Dunmore box set)	257	622
53	(Publications—A. I. E. E. Journal, April, 1922, p. 242)	259	623
	(Radio News, July, 1922, page 51)	267	627
	(Radio News, July, 1922, page 98)	269	628
	(Radio News, July, 1922, page 100)	271	629
	(Radio News, July, 1922, page 102)	273	630
59	(Radio News, November, 1922, pages 838, 839, 1001 and 1002)	275	631
61	(Radio Phone Receiving, pub. 1922, pages 73, 74, 75 and 76)	283	635
63	(Textbook of Radio, pub. 1922, pages 175, 183)	291	639
64	(Textbook of Radio, pub. 1922, page 185)	295	641
65	(Radio Phone Receiving, page 134)	297	642
66	(Textbook of Radio, pub. 1922, pages 177, 178, 179, 180, 181, 182 and 187)	299	643
67	(Diagram including Fig. 1 of Patent 1,455,141 and form of current in different sections)	313	650
69	(Wiring diagrams of Panels A, B, C, D, E, F, G, H, I and J)	315	651
70	(Wiring diagrams of Panels A, B, C, D, E and F, combined)	329	658
71	(Wiring diagrams of Panels A, G, C, H, E and F, combined)	331	659
72	(Wiring diagrams of Panels A, I, C, J, E and F, combined)	333	660
74	(Same as Plaintiffs' Exhibit 93, see pages 381-382)	335	661
75	(Same as Plaintiffs' Exhibit 93, see pages 383, 387, 432, 408, 444)	337	662
76	(Schematic diagram of Super-heterodyne)	339	663
77	(Simplified colored diagram of circuits of defendants' set S. W. 104, 105, 106, 108)	341	664
79	(Filter test diagram S. W. Set 109. Same as Plaintiffs' Exhibit No. 109)	349	669
80	(High frequency test diagram S. W. Set 109)	351	671
81	(Grid Bias diagram S. W. Sets 104, 105, 106, 108 and 109)	353	672
84	(Pencil description of A. C. Amplifier made by Lowell at Arcade Bowling Alleys)	355	673
85	(Photograph of Bureau of Standards A. C. Set with Lowell)	371	681
90	(Patent 1,606,212 to Dunmore & Lowell)	373	683
92	(Wiring diagram of test on defendants' set S. W. 109)	379	688
93	(Stipulation covering sale of sets by defendants and correctness of wiring diagrams including sets S. W. 104, 105, 106, 108 and 109)	381–465	689
	(Circuit data for Stewart-Warner A. C. Series R-104)	383	691
	(Blueprint I. N. 405)	387	693

		Original	Print
	(Instructions for Stewart-Warner Series 40 Radio Receivers)	389	694
	(Chassis Model 105 Receiver Models 50 to 59)	403	701
	(Service data for Stewart-Warner 105 Series Chassis Receiver Models 50 to 59)	404	702
	(Blueprint marked I. N. 407)	408	704
	(Instructions for Stewart-Warner Series 50 Radio Receivers)	410	705
	(Circuit data for Stewart-Warner A. C. Series R-106)	432	716
	(Service data for Model 106 Chassis)	434	717
	(Blueprint marked I. N. 404)	436	718
	(Blueprint marked I. N. 422)	438	719
	(Stewart-Warner—Series 60—Chassis 106 A, B and E Instructions)	440	720
	(Circuit data for Stewart-Warner Chassis Series 108 and 108-X)	444	722
	(Blueprint marked I. N. 426)	446	723
	(Stewart-Warner Chassis Model 108—Instructions)	448	724
	(Stewart-Warner Chassis Model 108-X—Instructions)	452	726
	(Chassis Model 109 (Receiver Models 1090 to 1099))	456	728
	(Service data for Model 109 Chassis)	458	729
	(Blueprint marked I. N. 427)	460	730
	(Stewart-Warner Chassis Model 109—Instructions)	462	731
94	(Colored Photostat of Set SW-109)	466	733
95	(Simplified diagram of Set SW-109)	468	734
96	(Copy of Speaker circuit wiring diagram made on blackboard by Witness Dr. Lee)	470	735
97	(Christian Science Herald—January 10, 1928, page 10)	472	736
98	(Letter to Magnavox from Dunmore, dated June 10, 1922)	474	737
	(Reply of Magnavox to letter of Dunmore of June 10, 1922)	476	738
	(Reply of Dunmore to letter of Magnavox of June 19, 1922)	478	739
99	(Letter to General Electric Co., July 28, 1923)	480	740
	(Reply of General Electric Co. dated August 3, 1923)	482	741
100	(Letter to Westinghouse Elec. & Mfg. Co., dated July 28, 1923)	484	742
	(Reply of Westinghouse Elec. & Mfg. Co. dated August 3, 1923)	486	743
101	(License to Brandes Products Corporation, dated October 1, 1927)	488	744
102	(License to Grigsby-Grunow-Hinds Co., dated November 28, 1927)	500	750
105	(Letter from plaintiffs to defendants, dated August 5, 1933, notifying of infringement and registry cards attached)	514	758

	Original	Print
106 (Bureau of Standards Publication, October, 1922, No. 450)	518	760
107 (Copy of Spring analogue diagram drawn on blackboard by Witness Lowell)	534	768
109 (Wiring diagram of connection for test of hum in filter output)	536	769
Defendants' Exhibits—		
"A" (Wiring diagram of R. C. A. Loudspeaker 104)	538	770
"B" (Patent No. 1,282,439 to Irving Langmuir)	540	771
"C" (Patent No. 1,251,377 to A. W. Hull)	546	776
"D" (Patent No. 1,195,632 to W. C. White)	552	780
"E" (Patent No. 1,587,084 to G. D. Robinson)	558	785
"F" (Patent No. 1,105,924 to Pridham & Jensen)	566	791
"The exhibits referred to in the testimony in suit of Dubilier Condenser Corporation et al. vs. Radio Corporation of America in the District of Delaware."		
Plaintiffs' Exhibits—		
No. 32 (Diagram current path in audio amplifier output circuit, plaintiffs' patent)	572	795
33 (Diagram neutralization of hum in output circuit, plaintiffs' patent)	574	796
34 (Diagram current path for field winding, plaintiffs' patent)	576	797
35 (Diagram neutralization of hum in field winding circuit—plaintiffs' patent)	578	798
36 (Diagram circuit, defendants' Loudspeaker 104)	580	799
37 (Diagram Loudspeaker 104 current path in audio amplifier output circuit)	582	800
38 (Diagram defendants' Loudspeaker 104 neutralization of hum in output circuit)	584	801
39 (Diagram defendants' Loudspeaker current path to field winding)	586	802
40 (Diagram defendants' Loudspeaker 104, neutralization of hum in field winding circuit)	588	803
Defendants' Exhibits—		
No. 77 (Electrical experimenter, November, 1919, page 636)	590	804
(Electrical experimenter, November, 1919, page 684)	592	805
(Electrical experimenter, November, 1919, page 686)	594	806
(Electrical experimenter, November, 1919, page 688)	596	807
78 (Pridham & Jensen U. S. Patent No. 1,105,924, same as Defendants' Exhibit "F" on page 566)	598	809
79 (Simplified Schematic Diagram Radiola 28 connected to speaker, Model 104)	600	811
80 (Waterman Diagrammatic Sketch 104 speaker floating coil location)	602	812
Clerk's certificate (omitted in printing)	604	

[fols. 1 & 2] PATENT 1,455,141, TO LOWELL & DUNMORE

Referred to in Paragraph 6 of the Bill of Complaint

Lowell, et al., 1,455,141

439

May 15, 1923. 1,455,141

P. D. LOWELL ET AL

RADIO RECEIVING APPARATUS

Filed March 27, 1922 2 Sheets-Sheet 1

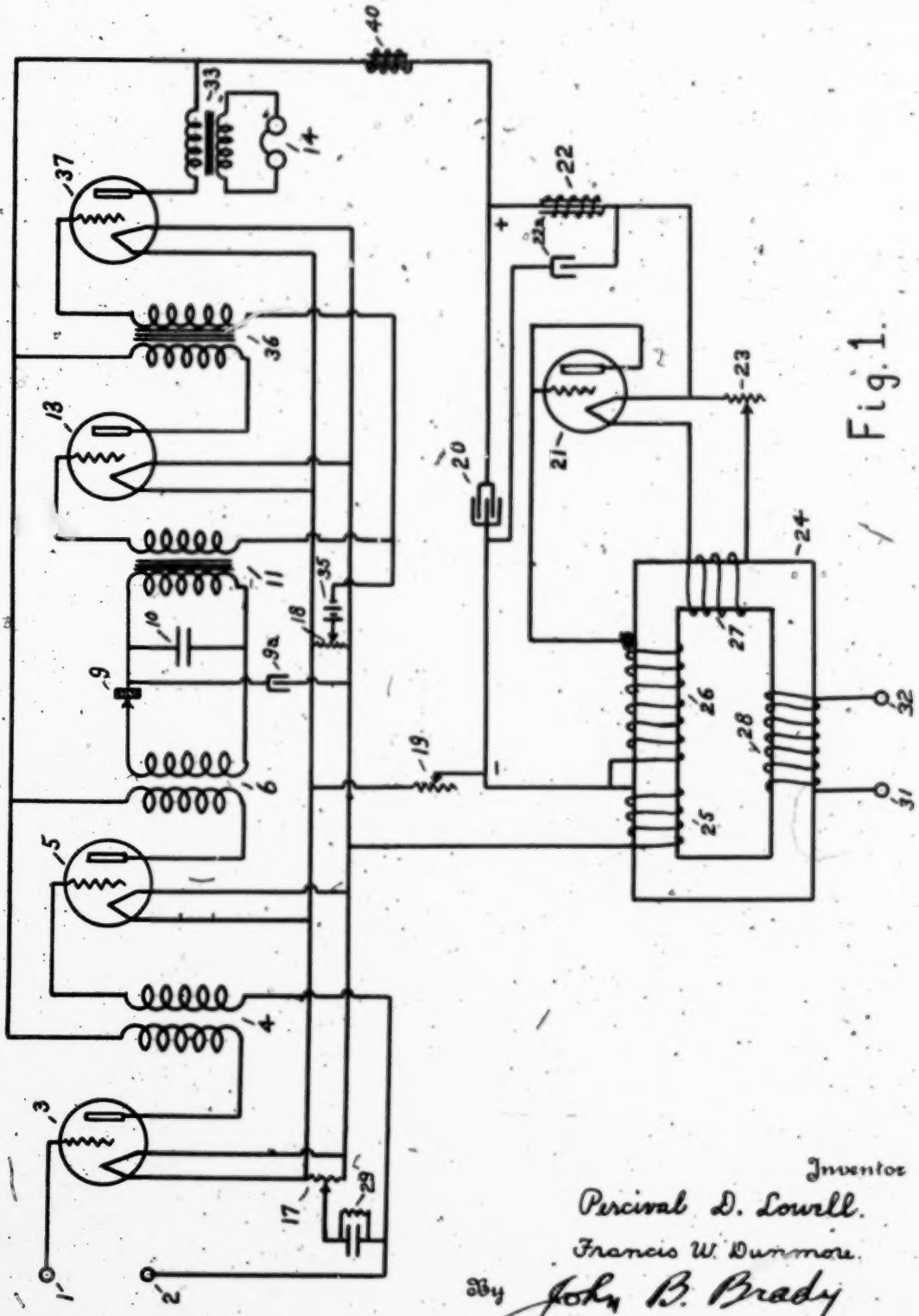

Fig. 1.

Inventor
Percival D. Lowell.
Francis W. Dunmore.
By John B. Brady
Attorney

440 May 15, 1923. 1,455,141

P. D. LOWELL ET AL

RADIO RECEIVING APPARATUS

Filed March 27, 1922 2 Sheets-Sheet 2

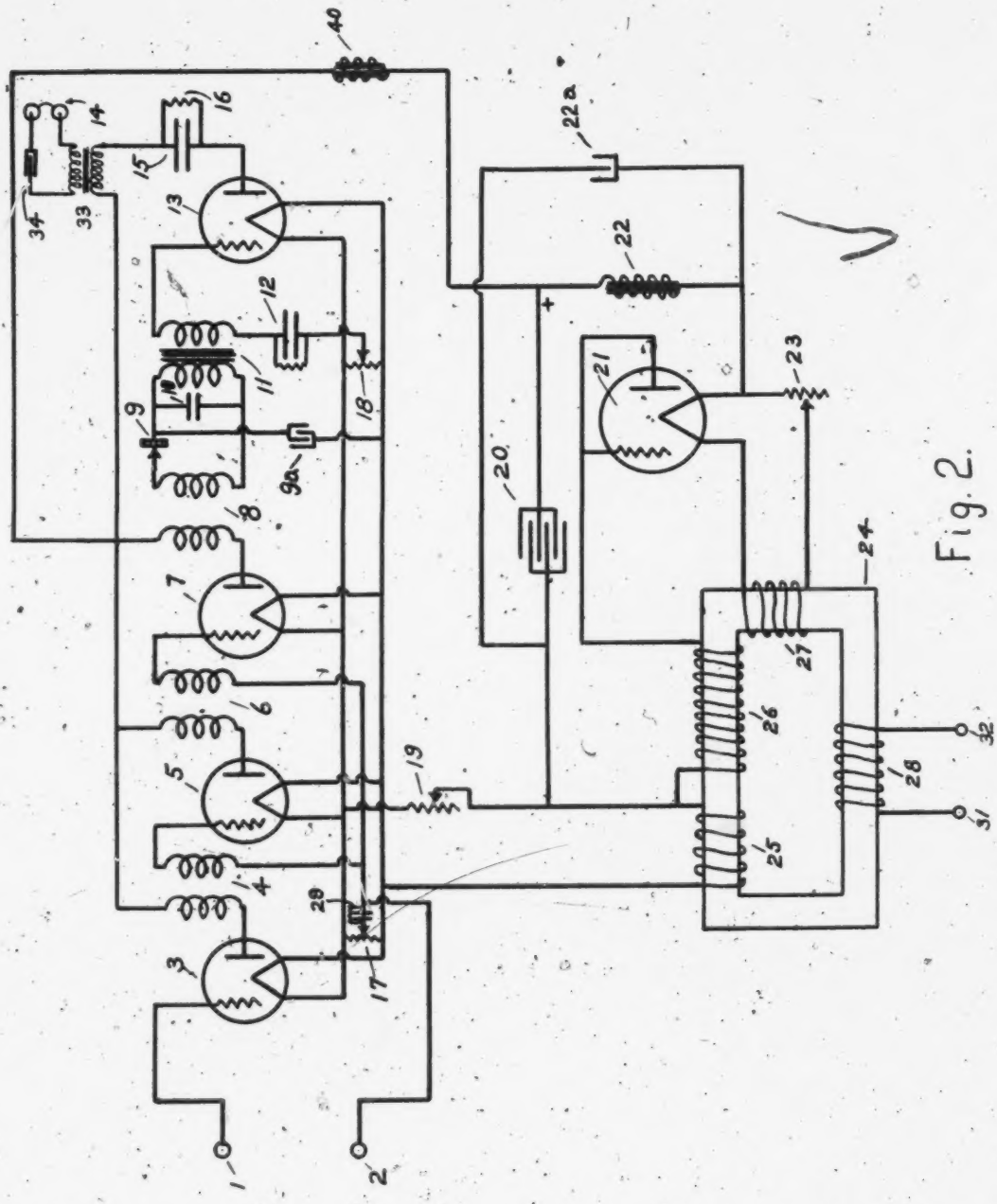

Fig. 2.

Inventor

Percival D. Lowell

Francis W. Dunmore

By John B. Brady

Attorney

UNITED STATES PATENT OFFICE.

PERCIVAL D. LOWELL AND FRANCIS W. DUNMORE, OF WASHINGTON, DISTRICT OF COLUMBIA.

RADIO RECEIVING APPARATUS.

Application filed March 27, 1922. Serial No. 547,111.

To all whom it may concern:

Be it known that we, PERCIVAL D. LOWELL and FRANCIS W. DUNMORE, citizens of the United States, residing at Washington, District of Columbia, have invented certain new and useful Improvements in Radio Receiving Apparatus, of which the following is a specification.

Our invention relates broadly to radio telegraph and telephone receiving apparatus and more particularly to a circuit arrangement for such receivers.

The object of the invention is to provide a receiver unit of maximum sensitivity employing thermionic vacuum tubes with their circuits supplied with energy from the standard alternating current residence lighting power.

Another object of the invention is to provide both radio and audio frequency amplification at the receiver and means for energizing the power circuits of the amplifier stages from the standard alternating current residence lighting power without interference in the reproducing receivers from the hum of the alternating current power supply.

A further object of the invention is to provide a circuit arrangement for a receiver wherein both the radio and audio frequency currents are amplified by means of electron tubes, a crystal detector used as a rectifier, the necessary filament and plate voltages being supplied by the standard alternating current residence lighting power, the residual hum in the telephone receivers being balanced out or neutralized by means of voltage dividers and other devices in the receiver circuits.

A still further object of the invention is to provide means in a radio receiver for transforming the alternating current power supply into currents suitable for the various circuits of the radio and audio frequency stages of the vacuum tube amplifiers and means for rectifying currents and obtaining a steady source of direct current potential for the plate circuits of the vacuum tubes.

Electron tube amplifiers form an important part of practically all radio receiving sets now, except the most simple types. Such amplifiers are in fact necessary to receive distant stations, or when using coil antennæ. For good operation, amplifier tubes require for the filament a source of voltage of very constant value (usually about 6 volts) and for the plate a source of voltage of from 40 to perhaps 300 volts. The filament voltage is usually supplied by storage cells, and the plate voltage by dry cells. The maintenance of these cells in operating condition, especially the storage cells, is often a source of much difficulty and annoyance. The storage cells are necessarily bulky and heavy, require constant attention to maintain proper charge and density of electrolyte, give off injurious acid or other fumes, and are subject to considerable variations of voltage during the period of discharge. The development of a receiver employing an amplifier which can be supplied from the ordinary 110-volt alternating current lighting mains is of considerable practical importance, since it eliminates the great practical difficulty of maintaining storage cells. The amplifier using such alternating current supply has the important advantages of reliability, convenience, and cheapness both in first cost and operating cost.

The invention will be more clearly understood by reference to the following specification and the accompanying drawings in which:

Figure 1 is a schematic wiring diagram of a complete receiver embodying two stages of radio frequency amplification, a crystal detector, and two stages of audio frequency amplification; and Fig. 2 is a wiring diagram of a modified form of our receiver including three stages of radio frequency amplification, a crystal detector, and one stage of audio frequency amplification.

It will be understood that the principles of our invention may be embodied in various forms and that details are not material. The present embodiment of the invention, therefore, is to be considered as merely indicative. The form illustrated in the drawing and hereinafter described in detail has been found to be one of the practical embodiments and capable of efficient operation and practical in construction.

The receiver of the present invention is particularly adapted for general use in receiving radio broadcasting concerts, news, lectures, music and messages. The receiver does not require the usual primary or sec-

ondary batteries as a source of power for the filament and plate circuits of the vacuum tube amplifiers. A power transformer forms a part of the apparatus and power from the standard alternating current residence lighting circuit is supplied to the primary winding of the transformer. The transformer has a plurality of secondary windings wound in such ratio as to give proportionate current and voltage values as required by the filament and plate circuits of the amplifiers. A rectifier of the two electrode valve type is employed for obtaining a direct current for the plate supply to the tubes and the filament of this valve is also supplied with heating current obtained from one of the proportionate secondary windings of the transformer. The control of the filament temperature of this valve affords means for regulating the potential supplied to the plates of the tubes.

Heretofore in the art successful results have not been obtained by employing the alternating current residence lighting circuit as a source of power supply due to the persistent and predominating interference offered in the reproducing telephones by the hum of the alternating current. We have discovered that this residual hum can be eliminated and in the present receiver the telephones are to all practical purposes absolutely silent as far as any residual hum from the alternating current power supply is concerned. To obtain this result we employ a rectifier of the crystal detector type, although other forms of rectifiers may be readily employed, interposed in circuit after the stages of radio frequency amplification and before the stages of audio frequency amplification. The use of a crystal detector is not as objectionable as it would seem on first consideration, as the radio-audio amplification in association with this form of rectifier makes possible a quick adjustment due to the fact that most any point on a sensitive crystal will bring in a signal of sufficient intensity for all practical purposes. The employment of a crystal detector in place of the electron tube detector reduced the 60-cycle hum very considerably. When an electron tube is used as the detector, there is impressed on both the plate and the filament a 60-cycle A. C. voltage which although small, becomes very objectionable when amplified by one or two stages of audio-frequency amplification. When the crystal detector is used, no 60-cycle voltage is supplied to the detector circuit. The radio-frequency transformer whose output is delivered to the detector circuit prevents the passage in any appreciable amount of 60-cycle current supplied to the radio-frequency stage and such voltages are not present in the crystal detector circuit and do not reach the input of the audio-frequency stage. In predetermined parts of the circuits of the vacuum tube amplifier voltage dividers, balancing resistances, leak resistances, condensers and choke coils are employed to balance out or neutralize any residual hum and prevents its passage into the telephone receivers.

Referring more particularly to Fig. 1 of the drawings a receiver circuit is shown adapted for connection with a variably tuned circuit and thence with an antenna ground system or with a coil antenna. The receiver illustrated comprises an amplifier circuit with two radio frequency stages, a crystal detector and two audio frequency stages. The filaments of all the tubes are connected in parallel and are lighted by alternating current voltage supplied from the secondary winding 25 of the transformer 24, their brilliancy being controlled by the rheostat 19. The primary winding of transformer 24 is shown at 28, the alternating current power supply being connected to the terminals 31 and 32.

Winding 26 of transformer 24 supplies high voltage alternating current which is rectified by the electron tube 21, smoothed out by choke coil 22 and condensers 20 and 22^a, which are about 2 microfarads capacity. The choke coil 40 may be used as a voltage limiting device in the plate circuit which serves to hold the plate voltage at the proper value regardless of the brilliancy of the electrodes of rectifier tube 21. This provides a high voltage direct current which is suitable for the plates of the amplifier tubes. The filament of the rectifier tube 21 is lighted from winding 27 of transformer 24. The rheostat 23 varies the brilliancy of the rectifier filament, which in turn controls the direct current voltage output.

The input terminals to the amplifier are shown at 1 and 2, being connected to the grid of tube 3 and terminal 2 being connected to the slider of balancing resistance 17 through a grid leak and shunting condenser indicated as a unit at 29, the latter serving to keep the grids of tubes 3 and 5 at the proper operating voltage, making the tube more suitable for amplifying. In the unit 29 the condenser is about 1 microfarad capacity and the shunting resistance is about 1 megohm. The balancing resistance 17 is about 200 ohms and is connected directly across the filament line and serves to stabilize the normal grid voltage. A similar balancing resistance 18 performs a similar function for the grids of tubes 13 and 37. The slider of balancing resistance 18 is connected through a dry battery 35 to grid of tubes 13 and 37. This battery impresses a suitable negative voltage on the grids making the tubes more suitable for amplifying. As this battery furnishes grid voltage only the power consumed is negligible. It is therefore of the small flashlight battery type and will con-

tinue effective for a period equivalent to its normal shelf life.

The plate circuit of tube 3 is coupled to the grid circuit of tube 5 by means of the radio frequency transformer 4. There is some variation in the plate current of tube 3 due to the periodic variation in filament temperature but the resultant audio frequency hum does not pass through the radio frequency coupling of transformer 4 and does not reach the input of tube 5.

The secondary of radio transformer 4 is connected to grid of tube 5 and to slider of balancing resistance 17 through condenser and shunting grid leak resistance 29, the resistance 17 keeping the grid voltage steady and the condenser and shunted resistance 29 keeping the grids at the proper negative voltage for amplifying purposes.

The primary winding of radio frequency transformer 6 is connected in the plate circuit of tube 5. The secondary winding of transformer 6 is connected to the crystal detector circuit 9 and includes the primary of audio frequency transformer 11 having a radio frequency by-pass condenser 10 shunted across the winding. The end of primary winding of transformer 11 which is connected to the crystal detector 9 is also connected to the filament circuit through a suitable condenser 9^a of 1 microfarad capacity, this condenser serving to further remove the 60 cycle hum from the telephone receivers. The secondary terminals of this audio transformer 11 are connected to the grid of tube 13 and to slider of balancing resistance 18 through battery 35. Another audio frequency stage is added in a similar manner and is indicated by transformer 36 and tube 37. The telephone receivers 14 may be connected inductively to the plate circuit of tube 37 by means of telephone transformer 33 which has a one to one ratio of windings.

By adjusting the balancing rheostats 17 and 18 the voltage of all the grids may be kept at a steady value and the battery 35 provides the proper negative voltage to the grids of the audio amplifying tubes for the best amplification, while grid leak and condenser 29 serve to keep the grids of tubes 3 and 5 at the best operating voltage.

Fig. 2 shows a modified form of circuit comprising three stages of radio frequency amplification, a crystal detector, and one stage of audio frequency amplification. As in the former case the slider of balancing resistance 17 is connected through a condenser shunted by a leak resistance 29 to the grids of the radio frequency amplifying tubes. The capacity of this condenser is about one microfarad. With this condenser in the circuit as shown, the grids assume a normal voltage suitable for amplifying as derived from winding 25 of transformer 24 while the balancing resistance 17 neutralizes effect of the alternating current on the filaments. The leak resistance across condenser 29 permits any super-charge on the grids to leak off to the filaments. This connection of condenser, high resistance leak and rheostat forms one of the neutralizing means for eliminating the hum of the alternating current from the reproducing telephone receivers.

The grid circuit of the audio frequency amplifier tube 13 is connected to the slider of balancing resistance 18 through condenser and shunted leak 12, which replaces the grid battery 35 used in the former circuit. The condenser 12 is about .02 microfarads capacity.

The purpose of the condenser 12 is to allow the grid of tube 13 to assume a normal voltage suitable for amplifying while the balancing resistance 18 serves to keep the grid voltage steady with respect to the filaments. This forms another of the means for eliminating the alternating current hum from the reproducing telephone receivers.

In series with the plate circuit of tube 13 is a condenser 15 of about .02 microfarads capacity shunted by resistance 16 of about 80,000 ohms. The action of this condenser and resistance is to partially block the low frequency fluctuations in plate current, caused by the periodic change in filament temperature, while the higher frequencies pass through more easily. The 80,000 ohms resistance allows the high voltage direct current to flow to the plate. In the secondary circuit of the telephone transformer 33 and in series with the telephone receivers 14 is shown a condenser 34 of about .02 microfarads capacity which partially blocks any low frequency hum from flowing into the telephone circuit, but which allows the higher frequencies to pass through more easily. The source of filament current and plate voltage is obtained from transformer 24 and two electrode tube rectifier 21 in the manner as described in the circuit arrangement of Fig. 1.

In either of these circuits, instead of the balancing resistance across the filament line, a divided condenser circuit with suitable grid leaks shunted across the condensers may be provided and a connection taken from the center thereof to the grid circuit, or the filament current winding on the transformer may be tapped at its electrical center and lead to the grid circuit. By provision of these neutralizers and the crystal detector rectifier the operator wearing head telephone receivers 14 has no practical interference from the low frequency hum of the alternating current power supply.

The amplifier as above described is adapted to be mounted in a readily portable cabinet which may also contain suitable variable tuning apparatus and the coil aerial,

thus making a complete compact, portable, and practical receiving unit. The power transformer is provided with a flexible cord lead and this may be plugged in to a source of standard house lighting current such as 110 volts 60 cycles A. C. The filaments of the tubes are brought up to an electron emitting temperature by rheostat 19. The plate potential is regulated by varying the temperature of the filament of the rectifier tube 21 by varying the rheostat 23. Rheostats 17 and 18 are regulated to adjust the grid potential and secure neutralization of any disturbing interference from low frequency hum. The crystal detector is adjusted to maximum sensitivity and the radio telephone or telegraph signals reproduced in telephone receivers 14.

While we have described our invention in certain specific embodiments, it will be understood that modifications may be made and that no limitations upon the invention are intended beyond the scope of the appended claims.

What we claim is:

1. In an apparatus for receiving radio signals the combination of a source of signal energy, means for amplifying said energy, means for rectifying said energy, and a source of alternating current for supplying power to said amplifying means and a plurality of means in circuit with said amplifying means for eliminating the hum of said alternating current in said apparatus.

2. In an apparatus for the reception of radio signals the combination of a source of signal energy, means for amplifying said signals, means for rectifying said signals, a source of alternating current for supplying power to said amplifying means, and means connected to said amplifying and rectifying means for eliminating the hum of said alternating current in said apparatus.

3. In an apparatus for the reception of radio signals the combination of a source of signal energy, means for amplifying said signal energy at radio frequencies, means for rectifying said energy, means for amplifying said energy at audio frequencies, a source of alternating current for supplying power to said amplifying means and separate means connected to each of said amplifying and rectifying means for eliminating the hum of said alternating current in said apparatus.

4. In an apparatus for the reception of radio signals the combination of a source of signal energy, means for amplifying said energy at radio frequencies, means for rectifying said energy, means for amplifying said energy at audio frequencies, a reproducer connected to said last amplifying means, a source of alternating current for supplying power to said amplifying means, and means connected to each of said amplifying, rectifying and reproducing means for eliminating the hum of the alternating current in said apparatus.

5. In an apparatus for the reception of radio signals the combination of a source of signal energy, a plurality of vacuum tubes arranged to amplify said energy at radio frequencies, a crystal detector arranged to rectify said energy, means for amplifying and reproducing said energy at audio frequencies, a source of alternating current for supplying power to said amplifying means, and a plurality of means for eliminating the hum of said alternating current in said apparatus.

6. In an apparatus for the reception of radio signals the combination of a source of signal energy, a plurality of vacuum tubes having grid, filament and plate electrodes, circuits interconnecting said electrodes whereby said tubes amplify said signal energy at radio frequencies, a crystal detector for rectifying said energy, means for amplifying and reproducing said energy at audio frequencies, a source of alternating current for supplying power to said amplifying means, and means in each of said circuits for eliminating the hum of the alternating current in said apparatus.

7. In an apparatus for the reception of radio signals the combination of a source of signal energy, means for amplifying said energy at radio frequencies, means for rectifying said energy, means for amplifying and reproducing said energy at audio frequencies, a source of alternating current, means for rectifying said current and supplying the rectified power to the circuits of said amplifying means and separate means in different parts of said circuits for eliminating the hum of the alternating current in said apparatus.

8. In an apparatus for the reception of radio signals the combination of a source of signal energy, a radio frequency vacuum tube amplifier, a crystal detector, an audio frequency vacuum tube amplifier, circuits connecting said amplifiers with said crystal detector, a source of alternating current for supplying power to said amplifiers, and separate means in each of said circuits for eliminating the hum of the alternating current in said apparatus.

9. In an apparatus for the reception of radio signals the combination of a source of signal energy, a radio frequency vacuum tube amplifier, a crystal detector, an audio frequency vacuum tube amplifier, circuits connecting said amplifiers with said crystal detector, a source of alternating current for supplying power to said amplifiers, adjustable means in said amplifier circuits and fixed means connected to said detector circuit for eliminating the hum of said alternating current in said apparatus.

10. In an apparatus for the reception of radio signals the combination of a source of signal energy, a radio frequency vacuum tube amplifier, a crystal detector, an audio frequency vacuum tube amplifier means for reproducing the signal energy, circuits connecting said amplifiers with said crystal detector, a source of alternating current for supplying power to said amplifiers, condensers shunted by resistances connected in said amplifier circuits, and adjustable means for eliminating the hum of said alternating current in said reproducing means.

11. In an apparatus for the reception of radio signals the combination of a source of signal energy, a radio frequency vacuum tube amplifier, a crystal detector, an audio frequency vacuum tube amplifier, a reproducer connected to said audio frequency amplifier, a transformer having a primary winding and a plurality of secondary windings, a source of alternating current connected to said primary winding, said secondary windings being connected to supply power to the circuits of said vacuum tube amplifiers, and hum eliminators connected in different portions of said circuits.

12. In an apparatus for the reception of radio signals the combination of a source of signal energy, a radio frequency vacuum tube amplifier, a crystal detector, an audio frequency vacuum tube amplifier, a reproducer connected to said audio frequency amplifier, a transformer having a primary winding and a plurality of secondary windings, a source of alternating current connected to said primary winding, said secondary windings being connected to supply power to the circuits of said vacuum tube amplifiers, and separate means connected in each of the circuits of said amplifiers, detector and reproducer for eliminating the hum of said alternating current in said apparatus.

13. In an apparatus for the reception of radio signals the combination of a source of signal energy, a radio frequency vacuum tube amplifier, a detector, an audio frequency vacuum tube amplifier, a reproducer connected to said audio frequency amplifier, a transformer having a primary winding and a plurality of secondary windings, a source of alternating current connected to said primary winding, means for rectifying energy from one of said secondary windings, means for supplying the rectified energy to the circuits of said vacuum tube amplifiers, and separate means connected in each of the circuits of said amplifiers, detector and reproducer for eliminating the hum of said alternating current in said apparatus.

14. In an apparatus for the reception of radio signals the combination of a source of signal energy, a plurality of vacuum tubes having grid, filament and plate electrodes, circuits interconnecting said electrodes whereby said tubes amplify said signal energy at radio frequencies, a detector for rectifying said energy, vacuum tubes for amplifying said energy at audio frequencies, a source of alternating current, means for supplying said current to the filaments of said tubes, means for rectifying said current and supplying potential to the plate circuits of said tubes, and separate means in each of said circuits for eliminating the hum of the alternating current in said apparatus.

15. In an apparatus for the reception of radio signals the combination of a source of signal energy, a plurality of vacuum tubes having grid, filament and plate electrodes, a detector, circuits interconnecting said electrodes and said detector, a transformer having a primary winding connected to a source of alternating current, secondary windings, a two electrode valve rectifier having a filament and a plate, connections between one of said secondary windings and the filament of said rectifier, connections between another of said secondary windings and said rectifier whereby direct current is supplied to the plate circuits of said vacuum tubes, another of said secondary windings connected to supply heating current to the filaments of said vacuum tubes and a capacity and resistance connected in said plate circuits for eliminating the hum of said alternating current in said apparatus.

16. In an apparatus for receiving radio signals the combination of a source of signal energy, means for amplifying said energy, means for rectifying said energy, a source of alternating current for supplying power to said amplifying means, means for rectifying said current, and a plurality of separate means connected in circuit with said rectifying means for smoothing out the rectified current and supplying power to said amplifying means.

17. In an apparatus for the reception of radio signals the combination of a source of signal energy, a plurality of vacuum tubes having grid, filament and plate electrodes, a source of alternating current for supplying power to said tubes, a detector for rectifying said signal energy, circuits interconnecting said electrodes and said detector, and an unipolar connection including a condenser between the circuit containing said detector and said filament electrodes, and means in said circuits for eliminating the hum of the alternating current in said apparatus.

18. In an apparatus for the reception of radio signals the combination of a source of signal energy, a plurality of vacuum tubes having grid, filament and plate electrodes, a detector, circuits interconnecting said electrodes and said detector, a source of alternating current for supplying power to

said circuits, and means connected in circuit with said grid and plate electrodes for eliminating the hum of the alternating current in said apparatus.

19. In an apparatus for the reception of radio signals the combination of a source of signal energy, a plurality of vacuum tubes having grid, filament and plate electrodes, a detector, circuits interconnecting said electrodes and said detector, a source of alternating current, a two electrode valve for rectifying said current and supplying the rectified energy to the plate electrodes of said vacuum tubes, and means connected in circuit with said plate electrodes for limiting the potential supplied to said plate circuits from said two electrode valve.

20. In an apparatus for receiving radio signals the combination of a source of signal energy, means for amplifying said energy, means for rectifying said energy, means for reproducing said energy, a source of alternating current for supplying power to said amplifying means, and means connected in circuit with said reproducing means for eliminating the hum of said alternating current in the reproducing means.

21. In an apparatus for the reception of radio signals the combination of a source of signal energy, a plurality of vacuum tubes having grid, filament and plate electrodes, a source of alternating current for supplying power to said tubes, a detector for rectifying said signal energy, circuits interconnecting said electrodes and said detector, fixed means in circuit with said grid electrodes and said plate electrodes, and variable means in circuit with said grid electrodes, all of said means serving to eliminate the hum of the alternating current in said apparatus.

PERCIVAL D. LOWELL.
FRANCIS W. DUNMORE.

DISCLAIMER

1,455,141.—*Percival D. Lowell* and *Francis W. Dunmore*, Washington, D. C. RADIO RECEIVING APPARATUS. Patent dated May 15, 1923. Disclaimer filed July 8, 1933, by the patentees and the exclusive licensee, *Dubilier Condenser Corporation*.

Therefore enter their disclaimer as follows:

(1) To any "source of alternating current for supplying power to said amplifying means" as set forth in claim 1 except such as supplies raw alternating current to the cathode heating circuit or circuits of such amplifying means and rectified current to the plate circuit or circuits of such amplifying means; to any "plurality of means in circuit with said amplifying means for eliminating the hum of said alternating current in said apparatus" except such means as comprises: (*a*) a connection from the grid of the amplifying means to the cathode thereof at a point not subjected to the influence of variations of the cathode heating current; (*b*) elements connected between the stages of said amplifying means which prevent the passage of power supply frequencies; and (*c*) a resistor shunted by a condenser interposed in the circuit between the grid and cathode of the amplifying means where said condenser forms a low impedance path for both signal and power supply frequencies and wherein the voltage drop across said resistor provides a negative bias for the grid of the amplifying means.

(2) To any "source of alternating current for supplying power to said amplifying means" as set forth in claim 2 except such as supplies raw alternating current to the cathode heating circuit or circuits and rectified current to the plate circuit or circuits; to any "means connected to said amplifying and rectifying means for eliminating the hum of said alternating current in said apparatus" except as comprises: (*a*) a connection from the grid of the amplifying means to the cathode thereof at a point not subjected to the influence of variations of cathode heating current; (*b*) elements connected between the stages of said amplifying means and between said amplifying and rectifying means which prevent the passage of power supply frequencies; and (*c*) a resistor shunted by a condenser interposed between the grid and the cathode of the amplifying means, where said condenser forms a low impedance path for both signal and power supply frequencies and wherein the voltage drop across said resistor provides a negative bias for the grid of the amplifying means.

(3) To any "source of alternating current for supplying power to said amplifying means" as set forth in claim 3 except such as supplies raw alternating current to the cathode heating circuit or circuits and rectified current to the plate circuit or circuits of such amplifying means; to any "separate means connected to each of said amplifying and rectifying means for eliminating the hum of said alternating current" except as comprises: (*a*) connecting the grid of the amplifying means to the cathode thereof at a point not subjected to the influence of variations of the cathode heating current; and (*b*) elements connected between the "means for amplifying said signal energy at radio frequencies" and the "means for rectifying said energy" which prevent the passage of power supply frequencies.

(4) To any "source of alternating current for supplying power to said amplifying means" as set forth in claim 4 except such as supplies raw alternating current to the cathode heating circuit or circuits of such amplifying means and rectified current to the plate circuit or circuits of such amplifying means; to any "means connected to each of said amplifying, rectifying, and reproducing means for eliminating the hum of the alternating current" except such as comprises: (*a*) connecting the grid of the amplifying means to the cathode thereof at a point not subjected to the influence of variations of the cathode heating current, and (*b*) elements connected between stages of the amplifying means and between the amplifying means and the rectifying means which prevent the passage of power supply frequencies.

(7) To any "means in different parts of said circuits for eliminating the hum of the alternating current" as set forth in claim 7 except such as comprises: (*a*) connecting the grids of said amplifying means to the cathodes thereof at a point not subjected to the influence of variations of the cathode heating current; (*b*) elements interconnecting the stages of the "means for amplifying said energy at radio frequencies" and elements interconnecting the "means for amplifying said energy at radio frequencies" with the "means for rectifying said energy" which prevent the passage of alternating current hum; and (*c*) such means as a resistor shunted by a condenser connected in a circuit between the grid and cathode of the "means for amplifying said energy at radio frequencies" where the said condenser forms a low impedance path for both signal and power supply frequencies.

(13) To any "means for supplying the rectified energy to circuits of said vacuum tube amplifiers" as set forth in claim 13, except such as supplies such rectified energy to the plate circuits of said vacuum tube amplifiers and also supplies raw alternating current to the cathode heating circuit or circuits of said amplifiers; to any "means connected in each of the circuits of said amplifiers, detector and reproducer for eliminating the hum of said alternating current" except such as comprises: (*a*) connecting the grids of the amplifiers to the cathodes thereof at a point not subjected to the influence of variations of the cathode heating current; (*b*) elements interconnecting the stages of said radio frequency vacuum tube amplifier and interconnecting the output of said radio frequency vacuum tube amplifier with the detector which prevent the passage of power supply frequencies; and (*c*) a resistor shunted by a condenser and connected in the circuit between the grid and cathode of each of said amplifiers, where the said condenser forms a low impedance path for both signal and power supply frequencies.

(14) To any "means in each of said circuits for eliminating the hum" as set forth in claim 14, except as comprises: (*a*) connecting the grids of vacuum tubes to the cathodes thereof at a point not subjected to the influence of variations of the cathode heating current, and (*b*) interconnecting the plurality of vacuum tubes which amplify the signal energy at radio frequencies through elements which prevent the passage of power supply frequencies.

(15) To any "vacuum tubes" as set forth in claim 15 except vacuum tubes which have the grid electrodes thereof connected with the cathodes thereof at a point not subjected to the influence of variations of the cathode heating current; and to any "circuits interconnecting said electrodes and said detector" as specified in said claim except such circuits as include an inductively coupled radio frequency transformer.

(16) To any "source of alternating current for supplying power to said amplifying means" as set forth in claim 16 except such as supplies raw alternating current to the cathode heating circuit or circuits and rectified current to the plate circuit or circuits; to any "means connected in circuit with said rectifying means for smoothing out the rectified current and supplying power to said amplifying means" except such as also prevents distortion of the signal current.

(18) To any "source of alternating current for supplying power to said circuits" as set forth in claim 18 except such as supplies raw alternating current to the cathode heating circuit and rectified current to the plate circuit or circuits of the vacuum tubes; to any "means connected in circuit with said grid and plate electrodes for eliminating the hum" except such as comprises: (*a*) connecting the grids of the vacuum tubes to the cathode thereof at a point not subjected to the influence of variations of the cathode heating current, and (*b*) interposing filter elements in the plate circuit to reduce fluctuation in power supply frequencies; and to any "circuits interconnecting said electrodes" except as include a radio frequency transformer.

(19) To any "source of alternating current" as set forth in claim 19 except as supplies raw alternating current to the cathode heating circuit or circuits of said vacuum tubes; and to any "circuits interconnecting said electrodes" except as include elements which prevent the passage of [illegible]

of the amplifying means to the cathode thereof at a point not subjected to the influence of variations of the cathode heating current, and (*b*) elements connected between stages of the amplifying means and between the amplifying means and the rectifying means which prevent the passage of power supply frequencies.

(7) To any "means in different parts of said circuits for eliminating the hum of the alternating current" as set forth in claim 7 except such as comprises: (*a*) connecting the grids of said amplifying means to the cathodes thereof at a point not subjected to the influence of variations of the cathode heating current; (*b*) elements interconnecting the stages of the "means for amplifying said energy at radio frequencies" and elements interconnecting the "means for amplifying said energy at radio frequencies" with the "means for rectifying said energy" which prevent the passage of alternating current hum; and (*c*) such means as a resistor shunted by a condenser connected in a circuit between the grid and cathode of the "means for amplifying said energy at radio frequencies" where the said condenser forms a low impedance path for both signal and power supply frequencies.

(13) To any "means for supplying the rectified energy to circuits of said vacuum tube amplifiers" as set forth in claim 13, except such as supplies such rectified energy to the plate circuits of said vacuum tube amplifiers and also supplies raw alternating current to the cathode heating circuit or circuits of said amplifiers; to any "means connected in each of the circuits of said amplifiers, detector and reproducer for eliminating the hum of said alternating current" except such as comprises: (*a*) connecting the grids of the amplifiers to the cathodes thereof at a point not subjected to the influence of variations of the cathode heating current; (*b*) elements interconnecting the stages of said radio frequency vacuum tube amplifier and interconnecting the output of said radio frequency vacuum tube amplifier with the detector which prevent the passage of power supply frequencies; and (*c*) a resistor shunted by a condenser and connected in the circuit between the grid and cathode of each of said amplifiers, where the said condenser forms a low impedance path for both signal and power supply frequencies.

(14) To any "means in each of said circuits for eliminating the hum" as set forth in claim 14, except as comprises: (*a*) connecting the grids of vacuum tubes to the cathodes thereof at a point not subjected to the influence of variations of the cathode heating current, and (*b*) interconnecting the plurality of vacuum tubes which amplify the signal energy at radio frequencies through elements which prevent the passage of power supply frequencies.

(15) To any "vacuum tubes" as set forth in claim 15 except vacuum tubes which have the grid electrodes thereof connected with the cathodes thereof at a point not subjected to the influence of variations of the cathode heating current; and to any "circuits interconnecting said electrodes and said detector" as specified in said claim except such circuits as include an inductively coupled radio frequency transformer.

(16) To any "source of alternating current for supplying power to said amplifying means" as set forth in claim 16 except such as supplies raw alternating current to the cathode heating circuit or circuits and rectified current to the plate circuit or circuits; to any "means connected in circuit with said rectifying means for smoothing out the rectified current and supplying power to said amplifying means" except such as also prevents distortion of the signal current.

(18) To any "source of alternating current for supplying power to said circuits" as set forth in claim 18 except such as supplies raw alternating current to the cathode heating circuit and rectified current to the plate circuit or circuits of the vacuum tubes; to any "means connected in circuit with said grid and plate electrodes for eliminating the hum" except such as comprises: (*a*) connecting the grids of the vacuum tubes to the cathode thereof at a point not subjected to the influence of variations of the cathode heating current, and (*b*) interposing filter elements in the plate circuit to reduce fluctuation in power supply frequencies; and to any "circuits interconnecting said electrodes" except as include a radio frequency transformer.

(19) To any "source of alternating current" as set forth in claim 19 except as supplies raw alternating current to the cathode heating circuit or circuits of said vacuum tubes; and to any "circuits interconnecting said electrodes" except as include elements which prevent the passage of power supply frequencies.

(20) To any "source of alternating current for supplying power to said amplifying means" as set forth in claim 20 except as supplies raw alternating current to the cathode heating circuit or circuits of said amplifying means and rectified current to the plate circuit or circuits of said amplifying means.

(21) To any "source of alternating current for supplying power to said tubes" as set forth in claim 21 except such as supplies raw alternating current to the cathode heating circuit or circuits and rectified current to the plate circuit or circuits of said tubes.

PATENT 1,635,117, TO FRANCIS W. DUNMORE.
Referred to in Paragraph 10 of the Bill of Complaint.

449 July 5, 1927. 1,635,117

F. W. DUNMORE

SIGNAL RECEIVING SYSTEM

Filed Feb. 27, 1922 3 Sheets-Sheet 1

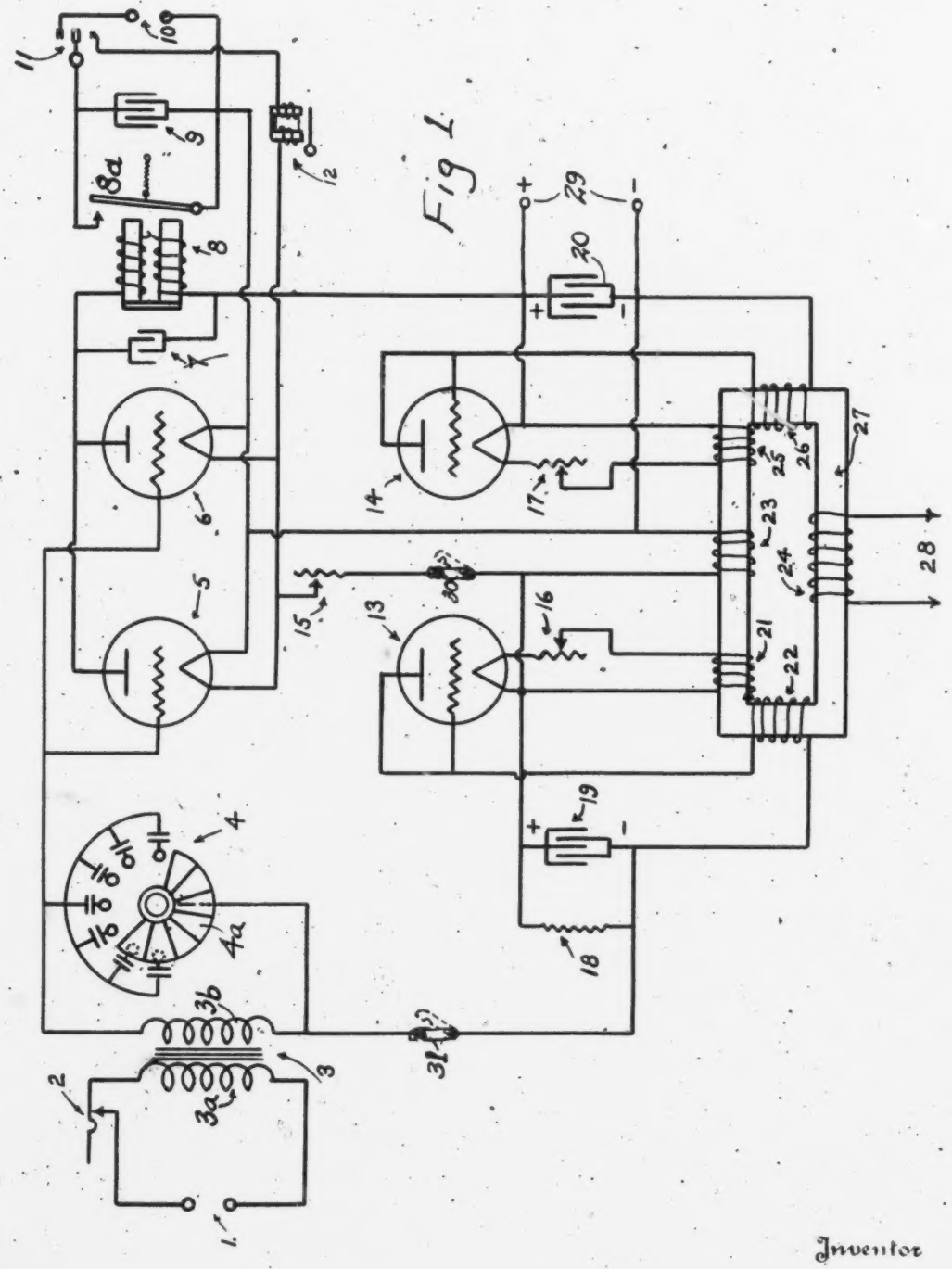

Inventor

Francis W. Dunmore

By John B. Brady.

Attorney

450 July 5, 1927. 1,635,117

F. W. DUNMORE

SIGNAL RECEIVING SYSTEM

Filed Feb. 27, 1922 3 Sheets-Sheet 2

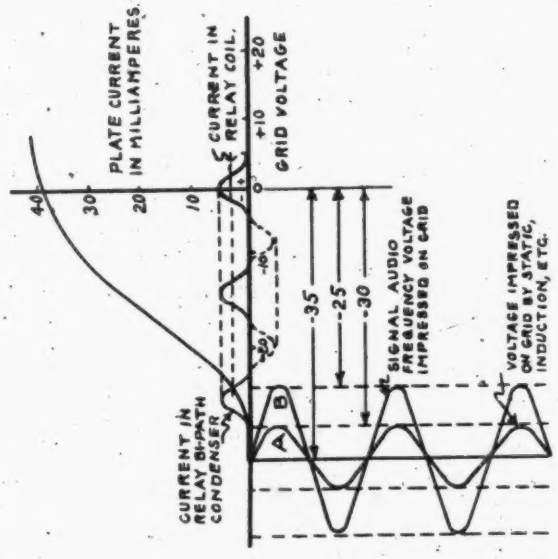

Fig 3

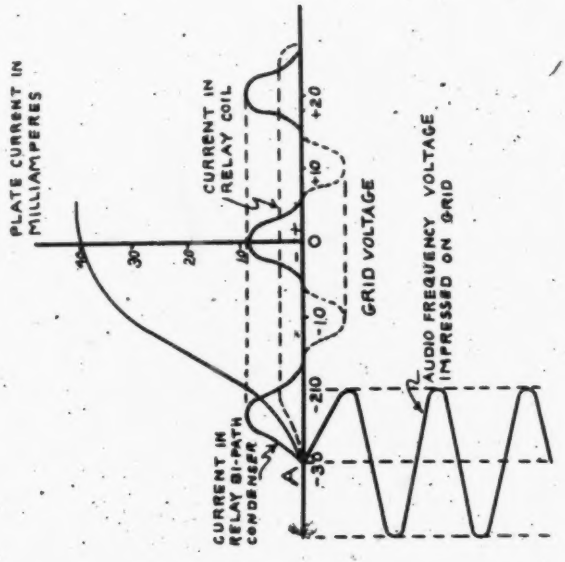

Fig 2.

Inventor

Francis W. Dunmore.

By John B. Brady

Attorney

452 July 5, 1927. 1,635,117

F. W. DUNMORE

SIGNAL RECEIVING SYSTEM

Filed Feb. 27. 1922 3 Sheets-Sheet 3

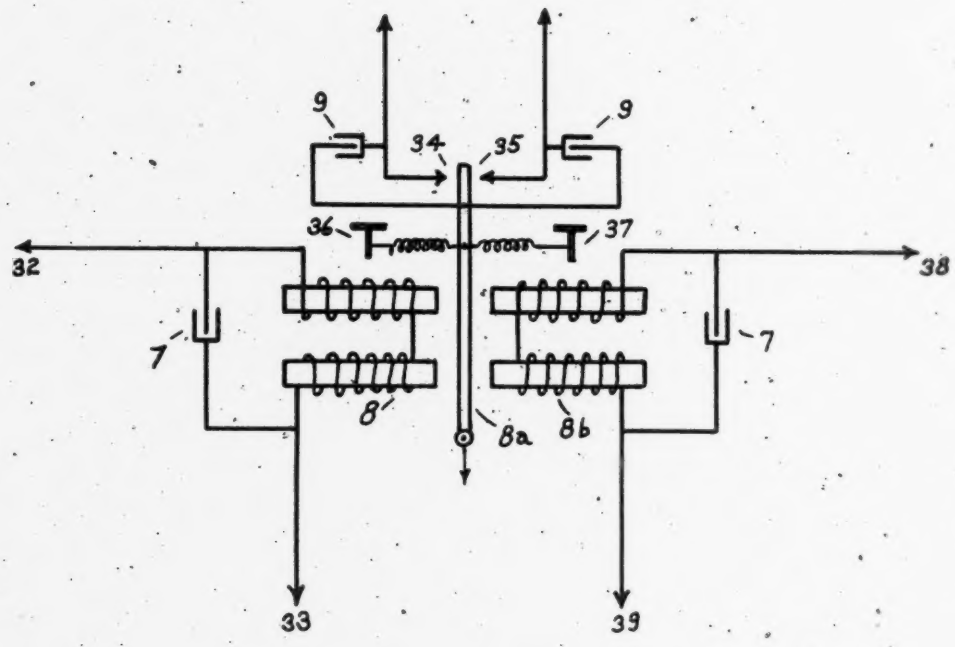

Fig. 4.

Inventor

Francis W. Dunmore.

By John B. Brady

Attorney

UNITED STATES PATENT OFFICE.

FRANCIS W. DUNMORE, OF WASHINGTON, DISTRICT OF COLUMBIA.

SIGNAL-RECEIVING SYSTEM.

Application filed February 27, 1922. Serial No. 539,591.

My invention relates broadly to audio frequency signal receiving systems and more particularly to relays for operation at a receiving station for the local or remote control of auxiliary apparatus.

My invention has for its principal object the provision of relays selectively operative upon the reception of signals of slightly separated tone frequency and particularly adaptable for reception of signals in wire wireless and radio telegraph systems.

The object of my invention is to provide a circuit arrangement for audio frequency signal receiving relays.

A further object of the invention is to provide a relay which may be constructed as a portable unit and operated from any alternating current source of power circuit supply, such as the residence lighting circuit usually employing an alternating current of 60 cycles frequency at 110 volts, for the positive closing of a circuit at a signal receiving station for the control of any desired local or remote apparatus.

A further object of the invention is to provide a relay with thermionic vacuum tubes with input and output circuit characteristics whereby positive closing of a mechanical relay may be secured in the output circuit of the apparatus upon control of the input circuit from a relatively feeble audio frequency impulse.

A still further object of the invention is to provide a thermionic vacuum tube relay apparatus highly selective in its operation dependent upon the tone frequency of the incoming signals.

Another object of the invention is to provide a complete relay including thermionic vacuum tube circuits with power connections for adaptation to any suitable external source of power, such as primary or secondary batteries or suitable lighting power circuits, with means for adjusting the input and output circuits of the thermionic vacuum tube circuits for the positive reception of signals of different audio tone characteristics.

Another object of the invention is to provide a relay circuit with minimum responsiveness to static and local disturbances not desired to be received.

In constructing the relay of the present invention, for operation in radio telegraph receiving systems, or any other system involving a tone frequency reception, the following characteristics have been secured as necessary requirements for a satisfactory relay to be employed in radio or wire reception as a positive circuit closer for operation of any variety of apparatus at a receiver, such as dynamic control circuits, automatic printing equipment, tape recorders or other recorder circuits for audible reception: (1) The relay must be of simple construction with few adjustments; (2) it must be easy to adjust and capable of being put into operation quickly; (3) it must be selective and as free from static and such disturbances as possible; (4) it must be capable of operating at a speed of at least 50 words a minute; (5) it must respond to weak signals; (6) it must be of rugged design, durable and capable of maintaining its adjustments; and (7) it must be portable.

My invention will be more clearly understood by reference to the following specification and the accompanying drawings, in which: Fig. 1 is a schematic wiring diagram of the relay showing the input circuit and terminals for connection of the relay to an external power supply and audio frequency signal source; Fig. 2 shows the characteristic curves for the thermionic vacuum tubes employed in the relay; Fig. 3 shows the characteristic curves illustrating a method of eliminating static, induction, etc, when such interference is not stronger than the signal; and Fig. 4 is a schematic diagram of an application of the relay.

It will be understood that the principles of my invention may be embodied in various forms and that details are not material. The present embodiment of the invention, therefore, is to be considered as merely indicative. The form illustrated in the drawing and hereinafter described in detail has been found to be one of the practical embodiments and capable of efficient operation and practical in construction for use at a radio and wire receiver for operation of signal recorders. The relay is also applicable to many other uses such as multiplex line wire telegraphy, radiodynamic control and wire wireless operation.

The multiplex operation of the relay with wire wireless is made possible by the audio tuning features of this relay, as the combination of numerous radio frequencies with the various different heterodyne notes thus obtainable provides a wide range for the selective application of the relay for wire

wireless Morse telegraphy. Numerous telephone or telegraph lines may be fed from one source of radio frequency, each line having a power amplifier modulated at one or more audio frequencies each of said frequencies selectively operating the present type relay.

The relay comprises broadly an input circuit which is energized from any source of audio frequency current, such as secured after the process of rectification at a wire or radio receiver, or as is secured in multiplex carrier wave telegraphy, or that produced by the heterodyne of two radio frequencies. The input circuit of the relay comprises an audio frequency input transformer the secondary terminals of which are connected to the grids and filaments of one or more receiving tubes which are operated in parallel. This input transformer secondary circuit is made adjustable for desired signals of different tone characteristics by means of a variable condenser shunted across the terminals thereof. The plates of the receiving tube are parallel connected and are included in an external output circuit energized from rectified energy taken from a winding upon an alternating current transformer having its primary winding energized from a source of supply such as the 110 volt 60 cycle residence lighting circuit or from any source of DC supply of from 160 to 200 volts. The current for operating the tube filaments is also obtained from a proportionate winding upon the core of this transformer or from a DC source of supply of suitable voltage. The grid circuit voltage for the bias upon the grids of the vacuum tubes is obtained by rectification of energy supplied from another proportionate winding upon the core of this transformer or from a suitable source of DC voltage.

The rectifiers employed may be two electrode tubes having the filaments thereof heated from current derived from proportionate windings upon the core of this transformer. In the output circuit of the amplifier tubes a mechanical relay is arranged, having its winding proportioned with the characteristics of the output circuit and shunted by an audio frequency bi-path condenser. This mechanical relay operates to close a positive electrical circuit which may be employed for the local or remote control of any variety of instruments.

Referring more particularly to Fig. 1 of the drawings, reference character 1 indicates the input terminals for the relay, 2 represents a telephone socket in which may be inserted a pair of telephones by which the operator may check up the operation of the relay or listen to the received signals in the usual way without employing the relay recorder. 3 indicates an audio frequency transformer, the primary winding 3^a of which forms a part of the input circuit of the relay and the secondary winding 3^b of which connects to the input circuit of the tubes 5 and 6. Bridged across the secondary winding 3^b is an audio frequency tuning condenser 4 variable by steps upon the adjustment of switch 4^a. This condenser may also be of the continuously variable air condenser type. The grids of the tubes 5 and 6 are biased from energy derived from proportionate windings upon transformer 27, the primary winding 24 of which connects through terminals 28 with a source of alternating current supply, such as the 110 bolt 60 cycle AC residence lighting current. The transformer 27 contains six windings, including the primary energizing winding 24. A proportionate secondary winding 23 supplies current to the filaments of the power tubes 5 and 6 through rheostat 15. The winding 26 supplies the high voltage for the plate circuit of the tubes 5 and 6. The winding 22 supplies the grid voltage for the tubes 5 and 6.

Tubes 13 and 14 are employed as two electrode valves and are used as half wave rectifiers, tube 14 supplying the plate voltage with energy derived from winding 26, and tube 13 supplying the grid voltage with energy derived from winding 22. In these tubes 13 and 14 the grids and plates are represented as electrically connected, forming two electrode valves. The rectified alternating current is smoothed out for the grid voltage by condenser 19. The rectified alternating current for the plate circuit is smoothed out by condenser 20. These condensers are connected respectively across the output terminals of the rectifiers. The filaments of tubes 13 and 14 are heated from energy derived from proportionate windings 21 and 25, and the temperature controlled by rheostats 16 and 17 respectively. A high resistance leak 18 of a value from 40,000 to 100,000 ohms is shunted across the output circuit of the rectifier tube 13 supplying voltage to the grids of tubes 5 and 6, as otherwise the grids of tubes 5 and 6 are insulated from the filaments of the tubes by the rectifier tube 13. By means of the filament rheostats 16 and 17 the grid and plate voltages respectively may be varied over any ranges desirable for the most efficient operation of the recorder.

Binding posts 29, 30 and 31 are provided on the relay for connection to primary or secondary batteries where the alternating current supply is not available. Binding posts 30 are normally shunted as indicated, but this shunt may be disconnected and connections made with an "A" battery of suitable voltage for filament lighting. Binding posts 31 are normally shunted when power is derived from the AC supply but in the absence of such supply are disconnected and

connections made with a "C" battery for biasing the grids of tubes 5 and 6. This battery should be preferably variable from 20 to 80 volts in steps of 10 volts. Binding posts 29 are provided for the connection of a high voltage "B" battery of from 160 to 250 volts for the plate circuit supply in the absence of the alternating current power source.

In the plate circuit of the tubes 5 and 6 the mechanical relay 8 is included. The windings of the relay are proportioned to the internal resistance of tubes 5 and 6 to secure high sensitivity.

A suitable condenser 7 is shunted across the relay winding 8 as a bi-path for the audio frequency plate currents which in turn cause DC plate current fluctuations at the keying frequency, which variations pass through the winding 8 and operate the relay armature 8^a. The relay is provided with armature 8^a with the circuit closer contact shunted by condenser 9 for absorption of the make and break discharge. The relay may be of the mechanically tuned type in which case condenser 7 would be omitted. The speed of operation is also dependent upon the type of mechanical relay employed.

The circuit closer 8^a is arranged in the circuit with switch 11 adapted to be thrown to different contact points to connect the circuit direct to output terminals 10. which may in turn be connected to any local or remote apparatus to be operated by the relay, or to connect a test buzzer 12, in circuit with a source of energy from winding 23, which also supplies the filament lighting current for tubes 5 and 6. The buzzer 12 may be of the synchronous type without the vibrator intermittent contact. Any variety of instruments may be connected to the terminals 10, such as a tape or drum type recorder, a printer recorder or dynamic control apparatus.

The principle of operation of the relay will be understood by reference to Fig. 2, which shows a set of curves characteristic of the relay for remote control by radio. By means of the variable biasing potential of the grids of the tubes 5 and 6, obtained by variation of rheostat 16 of rectifier 13, the grid voltage is adjusted to approximately 30 volts, at which value the plate current is zero as indicated at A, Fig. 2.

The incoming audio frequency voltage impressed on the grid varies the grid potential, for example, from —30 to —20 volts. the 10 volts decrease from —30 to —20 causes an increase, for example from 0 to 10 milliamperes in plate current while the increase from —30 to —40 volts is not effective in causing a plate current to flow due to the fact that —30 volts is already sufficient to reduce the plate current to zero. The result will be a pulsating direct current of 10 milliamperes, maximum amplitude in the plate circuit. This current flowing through the plate circuit and condenser 7 causes an increase in the plate current at the keying frequency, which change, passing through the relay coil will pull the relay armature over, making contact at 8^a which contact may control any mechanism desired. With the "C" battery grid voltage adjusted for maximum sensitivity, it was found that static, induction, etc., operated the relay. When these disturbances are not as strong as the signal, their effect on the relay may be overcome as shown at Fig. 3. For example, the "C" battery is shown increased to —35 volts, the critical value for maximum sensitivity being —30 volts. The disturbance due to strays, etc. merely reduces the "C" battery voltage to —30 which is not sufficient to cause plate current to flow. However, the signal, being of greater intensity than the strays reduces the voltage to —25, which causes a plate current of 5 milliamperes. It will be seen therefore that all disturbing effects, if of less intensity than the signal, do not affect the relay.

It has been found during the development of this relay that the rectified audio-frequency current in the plate circuit caused the relay armature to vibrate rapidly in the closed position, thus causing a poor contact. This was overcome completely, however by the addition of a one-microfarad condenser 7 across the relay coils. This served the purpose of an audio frequency bi-path for the highly inductive winding of the relay, thus greatly decreasing the resistance of the circuit. The change of plate current due to this audio frequency caused a second change which occurred at the keying frequency. This latter change passes readily through the relay coils and exerts a strong steady pull on the relay armature without the least chattering.

It has also been found that the variable condenser across the secondary 3^b of the input audio transformer made possible audio tuning, which increased the selectivity and sensitivity considerably. This tuning was very sharp, and it was found that European stations could be made to operate the relay while a high power station here in the United States would fail to operate it, although the high power station was coming in on the same wave length and slightly stronger. This was made possible by adjusting the heterodyne note of the European station to a frequency different from that of the local station and then tuning the secondary of the audio-transformer to that frequency. The variable condenser may be replaced by a fixed condenser and the audio tuning accomplished by adjusting the heterodyne note to the resonant frequency. By means of this audio tuning one of three sta-

tions transmitting simultaneously have been selected and caused to operate the relay though all were of equal intensity. By the use of two recorders operated in series, each working one pen of a double ink register, it was possible to make a simultaneous record of signals made by the spacer wave and sending wave from the U. S. naval high power radio station at Annapolis, Md., at a distant receiving station.

Tests showed that with a signal strength sufficient to produce a plate current of 10 milliamperes, the relay could be operated at a speed of 48 contacts per second, the contact being sufficient to operate a buzzer. With three milliamperes in the plate circuit, a speed of 27 contacts per second was obtained. With one milliampere a speed of 19 per second. In each case the relay armature spring tension was adjusted for the best operation.

The relay is adapted to have all the parts mounted within a readily portable cabinet, and provided with plug connections for direct connection of the apparatus to the lighting circuit power supply, and in the absence of such power binding posts for "A", "B" and "C" batteries are provided so that the relay may be operated in places where the AC supply is not available.

The apparatus may be operated in a combination system as shown in Fig. 4, wherein two different mechanical relays 8 and 8^b of similar construction are arranged to actuate a common armature 8^a. The armature may be mounted to swing in opposite directions in accordance with the pull of the diametrically opposed mechanical relay magnets 8 and 8^b, connected in the output circuits of two different vacuum tube relay equipments. The terminals 32 and 33 go to said output circuit of one relay and the terminals 38 and 39 go to the output circuit of another similar relay. The terminals 32 and 38 go to the plates of the relay vacuum tubes and 33 and 39 to the source of plate voltage.

Contacts closed by the armature at 34 and 35 in its movement to either side from its normal midway position permits the closing of a variety of work circuits. Adjustment springs at 36 and 37 hold the armature normally in the midway position between the two contacts 34 and 35.

This method may be used to render a crossed coil radio direction finder a direct reading and self setting device similar to a magnetic compass or it may be used to hold a moving object on a given course when used in conjuction with an equi-signal crossed coil, directional transmitter.

Having thus described my invention, what I claim and desire to secure by Letters Patent of the United States is as follows:

1. The combination in a signal receiving system of a source of audio frequency signals, a plurality of thermionic vacuum tubes having grid, filament and plate electrodes, an audio frequency input circuit including each of said grid electrodes and an output circuit including each of said plate electrodes, a source of alternating current power supply, means associated with said alternating current power supply for impressing a negative potential on said grid electrodes, and a positive potential on said plate electrodes and energizing said filament electrodes and a relay in said output circuit and arranged to respond to said source of audio frequency signals.

2. The combination in a signal receiving system of a source of audio frequency signals, a plurality of thermionic vacuum tubes having grid, filament and plate electrodes, connections between the respective electrodes of said tubes, an audio frequency input circuit, an output circuit, means for selectively tuning said input circuit, a source of alternating current power supply, means for energizing said filaments, a rectifier adapted to supply a negative potential to said grid electrodes from said source of alternating current, a rectifier adapted to apply a positive potential to the plate electrodes in said output circuit from said source of alternating current, and a mechanical relay in said output circuit actuated by said audio frequency signals.

3. The combination in a signal receiving system of a source of audio frequency signals, a thermionic vacuum tube having a grid, filament and plate electrode, an audio frequency input circuit, an output circuit, a source of alternating current power supply, means for energizing said filament, a rectifier adapted to supply a negative potential to the grid electrode in said input circuit, a condenser and a resistance parallelly connected across the output of said rectifier, a second rectifier adapted to apply a positive potential to the plate electrode of said output circuit from said source of alternating current, a condenser connected across the output of said rectifier and a mechanical relay in said output circuit actuated by said audio frequency signals.

4. The combination in a signal receiving system of a source of audio frequency signals, a plurality of thermionic vacuum tubes having grid, filament and plate electrodes, connections between the respective electrodes of said tubes, an audio frequency input circuit including said grid electrodes, an output circuit including said plate electrodes, means for selectively tuning said input circuit, a source of alternating current power supply, means for energizing said filaments, a rectifier adapted to supply a negative potential to said grid electrodes from said source of alternating current, means for smoothing out the energy delivered by said

rectifier, a second rectifier adapted to positively energize said plate electrodes from said source of alternating current, means for smoothing out the energy delivered to said output circuit and a mechanical relay in said output circuit actuated by the audio frequency signals selected by said input circuit.

5. The combination in a signal receiving system of a source of audio frequency signals, a plurality of thermionic vacuum tubes having grid, filament and plate electrodes, an audio frequency input circuit, means in said input circuit for discriminating against signals of undesired frequency and selectively receiving signals of a desired frequency, an output circuit, a source of alternating current power supply, means for energizing said filaments, rectifiers comprising valves containing heated and cold electrodes for negatively charging the grid electrodes and positively charging the plate electrodes of said input and output circuits from said source of alternating current, means for varying said energy, means for smoothing out the energy delivered by said rectifiers and a mechanical relay in said output circuit actuated by the audio frequency signals selected by said means in said input circuit.

6. The combination in a signal receiving system of a source of audio frequency signals, a plurality of thermionic vacuum tubes having grid, filament, and plate electrodes, an audio frequency input circuit, an output circuit, means for sharply tuning said input circuit to a selected audio note, a source of alternating current power supply, means for energizing said filaments, a two electrode rectifier adapted to supply a negative potential to the grid electrodes of said input circuit from said source of alternating current, means for smoothing out the energy delivered by said rectifier, a second two electrode rectifier adapted to positively charge the plate electrodes of said output circuit from said source of alternating current, means for smoothing out the energy delivered to said output circuit and a mechanical relay in said output circuit actuated by said audio frequency signals at the selected audio note distinguished by said input circuit.

7. The combination in a signal receiving system of a source of audio frequency signals, a plurality of thermionic vacuum tubes having grid, filament and plate electrodes, an audio frequency input circuit, an output circuit, means connected in shunt with said input circuit for sharply tuning said circuit to a selected tone frequency, a source of alternating current power supply, rectifiers comprising valves containing heated and cold electrodes for impressing negative and positive potentials on said grid and plate electrodes respectively in said input and output circuits from said source of alternating current, means for varying the temperature of said heated electrodes whereby to vary the potential impressed upon said grid and plate electrodes and a mechanical relay in said output circuit actuated by said audio frequency signals at the tone frequency selected by said input circuit.

8. The combination in a signal receiving system of a source of audio frequency signals, a thermionic vacuum tube having grid, filament and plate electrodes, a selectively tuned input circuit, an output circuit, a source of alternating current, a rectifier, means for impressing rectified energy on said grid electrode in said input circuit, a high resistance leak shunted across said rectifier and a mechanical relay in said output circuit actuated by said signals.

9. A signal receiving system comprising in combination an audio frequency amplifier including an electron tube having grid, filament and plate electrodes, an input circuit interlinking said grid and filament electrodes, an output circuit interlinking said plate and filament electrodes, a source of alternating current, means for rectifying said current, means for supplying a negative potential to the grid electrode of said electron tube from said source of alternating current, and means for supplying a positive potential to said plate electrode from said source of alternating current, whereby said audio frequency amplifier operates to amplify signaling energy without interference from said source of alternating current.

10. In a signal receiving system the combination of a source of audio frequency signals, an electron tube having grid, filament and plate electrodes, an input circuit interconnecting said grid and filament electrodes, an output circuit interconnecting said plate and filament electrodes, a source of alternating current, independent rectifiers for rectifying said alternating current, connections between one of said rectifiers with said input circuit for impressing a negative potential on said grid electrode, connections between said other rectifier with said output circuit for impressing a positive potential on said plate electrode, and a responsive device connected in the output circuit for actuation by amplified signaling energy.

11. In a direct current supply source for vacuum tubes and the like, the combination of a source of power adapted to be energized by alternating current or the like, means for converting such current into current of constant duration, means for smoothing out fluctuations in such current comprising a filter and a resistance connected across the output side of said filter and output terminals connected at opposite ter-

minals of said resistance, said resistance being of such value that the current flowing therethrough is relatively large with respect to the current supplied to the load.

12. A method of energizing thermionic vacuum tubes or the like from a source of alternating current, which comprises rectifying such alternating current to produce fluctuating direct current, filtering out fluctuations from such fluctuating current, passing such filtered currents through a resistance to produce a voltage drop therethrough and impressing the desired portion of such voltage drop upon said thermionic tube.

FRANCIS W. DUNMORE.

DISCLAIMER

1,635,117.—*Francis W. Dunmore*, Washington, D.C. SIGNAL-RECEIVING SYSTEM. Patent dated July 5, 1927. Disclaimer filed July 8, 1933, by the patentee and the exclusive licensee, *Dubilier Condenser Corporation*.

Hereby enter their disclaimer to:

(1) Any "source of alternating current power supply" in claim 1 except such as delivers rectified alternating current to said grid electrodes and raw alternating current to said filament electrodes; to any "means associated with said alternating current power supply for impressing a negative potential on said grid electrodes" in said claim 1, except such means as comprise a resistance in series with said grid electrodes shunted by a condenser; to any "means for energizing said filaments" as specified in claims 2, 3, 4, 5, and 6, except such means as supply raw alternating current to said filaments; and to any "rectifier adapted to supply a negative potential to said grid electrodes" as specified in claims 2, 4, 5, and 6 except such as supply such negative grid biasing potential by means of a bias determining resistance in series with the grid electrodes and connected to the respective cathodes of the amplifying tubes and shunted by a condenser of low impedance to power supply frequencies.

(2) Any "filament electrodes" specified in claim 9 except such as are energized by raw alternating current; and any "means for supplying a negative potential to the grid electrode of said electron tube from said source of alternating current" as specified in claim 9 except such means as comprise a bias determining resistance connected in a series path between the grid and filament electrodes and shunted by a condenser of low impedance to power supply frequencies.

(3) Any "source of power adapted to be energized by alternating current or the like" as specified in claim 11, except such as supplies raw alternating current to the cathode heating circuits of such tubes and rectified current to the grid circuits of such tubes; and to any "output terminals connected at opposite terminals of said resistance" as specified in said claim, except such as are also connected to the grid and cathode of the vacuum tube.

(4) Any "method of energizing thermionic vacuum tubes or the like from a source of alternating current" as specified in claim 12, except such as supplies raw alternating current to the cathode heating circuit of such tubes and rectified current to the grid circuit of such tubes; and to "impressing the desired portion of such voltage drop upon said thermionic tube" except to impressing the desired portion of the voltage drop upon the grid-cathode circuit of said thermionic tube.

[*Official Gazette August 1, 1933.*]

[fols. 24 & 25] EXHIBIT "A"

Attached to Plaintiffs' Affidavit in Opposition to the Motion to Dismiss

In the United States Patent Office,

Before the Board of Appeals

In Re Interferences:

Interference No. 51,204

LOWELL & DUNMORE

v.

BLATTERMAN

Interference No. 51,702

PUPIN

v.

LOWELL & DUNMORE

v.

BLATTERMAN

Interference No. 53,154

PUPIN

v.

DUNCAN

v.

LOWELL & DUNMORE

v.

BLATTERMAN

Interference No. 53,155

DUNCAN

v.

LOWELL & DUNMORE

Decisions Affirming Examiner of Interferences and Awarding Priority to Lowell & Dunmore

John B. Brady, Attorney for Lowell and Dunmore.

[fol. 26] U. S. Patent Office, Board of Appeals. July 25, 1931. Mailed.

1—6689-C

Appeals Nos. 4820-21-22

Hearing: May 12, 1931

OVT.

In the United States Patent Office,

Before the Board of Appeals

PUPIN

v.

DUNCAN

v.

LOWELL AND DUNMORE

v.

BLATTERMAN

Patent Interference No. 53,154 between an application of Michael I. Pupin filed February 4, 1924, Serial No. 690,586; an application of Robert D. Duncan, Jr., filed October 20, 1923, Serial No. 669,662; the patent granted Percival D. Lowell and Francis W. Dunmore on May 15, 1923, No. 1,455,141, on an application filed March 27, 1922, Serial No. 547,111; and an application of Albert S. Blatterman filed March 10, 1922, Serial No. 542,525. Radio Receiving Apparatus.

Mr. O. H. Eschholz and Messrs. F. W. Lyle & W. H. Whitten for Pupin.

Mr. Philip S. McLean for Duncan.

Mr. John B. Brady and Mr. John Boyle, Jr. for Lowell and Dunmore.

Mr. David P. Wolhaupter for Blatterman.

[fol. 27] This case comes up on appeal from the decision of the Examiner of Interferences awarding priority of invention of the subject matter in issue to the party Lowell and Dunmore. Each of the other three parties, Pupin, Duncan and Blatterman, has appealed.

The issue is stated in a single count which reads as follows:

In an apparatus for the reception of radio signals the combination of a source of signal energy, means for amplifying said signals, means for rectifying said signals, a source of alternating current for supplying power to said amplifying means, and means connected to said amplifying and rectifying means for eliminating the hum of said alternating current in said apparatus.

The count is a copy of claim 2 of the Lowell and Dunmore patent No. 1,455,141, granted May 15, 1923, on an application filed March 27, 1922. Neither Pupin nor Duncan filed his application involved herein until after the issuance of said patent and consequently each is under the burden of proving his case beyond a reasonable doubt. Blatterman filed on March 10, 1922, and is the senior party in this proceeding.

The invention relates to apparatus for receiving radio signals in which a source of alternating current is used for supplying power to the means for amplifying the signals. The count includes means for rectifying the signals and means connected to the amplifying and rectifying means for eliminating the hum of said alternating current in the apparatus.

The juniormost party, Pupin, is relying on the filing date, December 31, 1915, of his application Serial No. 69,566, which matured into patent No. 1,571,458, on February 2, 1926, for constructive reduction to practice. The testimony submitted by him is solely for the purpose of aiding in the interpretation of the language used in his earlier application. Each of the other three parties has taken testimony relating to priority of invention.

[fol. 28] Considering first the case of Pupin, it is evident he can prevail only if the invention defined in the count is fairly disclosed in his earlier application. The filing date of that application is prior to any date alleged by any of the other parties.

The 1915 Pupin application drawing shows a direct current generator provided with two commutators, one of which supplies a line with a small current at a relatively high voltage and the other of which supplies another line with a larger current at a relatively low voltage. A plurality of filtering units is provided in each line for smoothing out the fluctuations. The specification states that the

pilot conductor, which is the line supplying the larger current, is well adapted to replace the storage batteries used to heat the filaments in vacuum tubes employed in wireless telegraphy and that the artificial cable supplying the small current at higher voltage is likewise adapted to replace the electric batteries used in wireless telegraphy for charging electrodes in vacuum tubes or for maintaining a small current through such tubes. It also states:

"A machine like that shown in the drawing, having two commutators and two associated pilot conductors, is well adapted to replace both of the batteries which are used today for heating the filaments and for exciting the vacuum tube relays and amplifiers in wireless wave transmission systems."

It also, on page 6, suggests the substitution of an alternating current generator and a mercury rectifier for the direct current generator.

Pupin, in his brief, advances several reasons in support of his contention that the disclosure in his earlier application supports the count. He states that apparatus used in wireless telegraphy includes that at the receiving station as well as that at the transmitting station, and that likewise the expression "transmission systems" in the sentence quoted above should be interpreted as applicable to receiving apparatus. His Exhibits Nos. 2 and 3 were introduced in evidence to show that in the patented art and technical [fol. 29] publications existing in 1915 this expression is sometimes used in this sense. He also urges that in 1915 vacuum tubes were more commonly employed in receiving apparatus than in transmitting apparatus and also that separate batteries were more frequently used in the former. He further urges that there was a real necessity of removing hum in the receiving apparatus while the necessity did not exist in connection with the transmitting apparatus. In view of all these considerations and the fact that in the sentence quoted above reference is made to relays as well as to amplifiers, Pupin insists that the disclosure in the earlier application would naturally be interpreted by those skilled in the art as describing receiving apparatus constructed and arranged in the manner defined in the count.

All of Pupin's arguments have been carefully considered, but we are persuaded in view of the various features of

uncertainty in the earlier application disclosure, that said application should not be held as definitely pointing out the invention in issue. No mention is made of receiving apparatus as such and it is questionable that the expression "transmission systems" was intended to include receiving apparatus. The expression "vacuum tube relays" is not clearly distinguished from vacuum tubes when used as amplifiers, and if intended to be so distinguished it fails to definitely designate a rectifier of receiving apparatus.

The count is clearly limited to receiving apparatus having means for rectifying the signals and is further limited to a specific arrangement of parts in which the hum eliminating means is connected not only to the amplyfying means but also to the rectifying means. We accordingly hold with the examiner that Pupin is not the prior inventor of the subject matter in issue.

The proofs adduced by the party Duncan can be considered as overcoming the filing dates of the senior party Blatterman and the appellees Lowell and Dunmore, both in March, 1922, only under one or the other of the two following assumptions, first, that certain tests made by Duncan and his assistant, Isler, in 1921 amounted to a reduction to practice of the invention, and second, that Duncan [fol. 30] has established conception as early as 1921 followed by due diligence at the time his opponents entered the field and from then until Duncan reduced to practice.

The tests referred to are alleged to have been made of circuit arrangements corresponding to those shown in Duncan's Exhibit No. 15, which is a sketch made by Duncan while testifying. Duncan and Isler fix the time of these tests as prior to May 7, 1921, by reference to the fourth sheet of the reports forming Duncan's Exhibit No. 3. They state that the fourth paragraph on this sheet refers to said tests. This paragraph reads as follows:

"4. A few experiments were conducted with a view to operating the filaments of receiving tubes from alternating current. So far no entirely satisfactory results have been obtained, but a method has been worked out which it is believed with proper development will entirely eliminate the presence of the 60 cycle ripple in the telephone receivers."

Notwithstanding the testimony of Duncan and Isler as to the success of these tests, it seems to us that the tests did not amount to a reduction to practice of the apparatus tested. This record made at the time of the tests clearly indicate that the tests were not then regarded as being successful and that further development work would be necessary.

We believe that the circuit arrangement of Duncan's Exhibit No. 15 does not include a connection between the hum eliminating means and the detector, but such holding is not material to a proper determination of the case, for, if it be assumed that Duncan has established conception as early as May 7, 1921, it is clear from Duncan's testimony that he did nothing further with the invention in issue prior to the year 1923. In the meantime, during which Duncan was not exercising due diligence, both Lowell and Dunmore, and Blatterman constructively reduced the invention to practice by filing their applications involved herein.

We accordingly hold that Duncan is not entitled to the award of priority of invention in this proceeding.

[fol. 31] The examiner held that Lowell and Dunmore have established conception on December 8, 1921, and reduction to practice at least as early as January 20, 1922. It is believed their proofs, and particularly the exhibits and testimony designated in the examiner's decision, justify these holdings. We further note that the count is readable on the circuit dated December 10, 1921, on page 49 of Dunmore's note book (Lowell and Dunmore Exhibit No. 8) which fact further indicates that they had a complete conception of the invention in issue as early as that date.

The senior party Blatterman is relying on the test described on pages 21 and 22 of his note book introduced in evidence as his Exhibit A. A copy of the contents of this book is included in his Exhibit C, and Exhibit E is an enlargement of the circuit shown on page 21 of the note book. The entry is dated November 28, 1921, which is just ten days prior to the date accorded Lowell and Dunmore for conception.

The circuit includes three radio frequency amplifier tubes, a detector tube and two audio frequency amplifier tubes. The filaments and plate circuits of the detector and audio frequency amplifiers are supplied with direct current by batteries. A rectifier tube is used for rectification of

110 volt 60 cycle alternating current to supply the plate circuits of the radio frequency amplifiers. The filaments of this power rectifier and said amplifiers are heated by alternating current supplied by a stepdown transformer connected to the power circuit. Hum eliminating means are provided in the condenser C and in the 1000 ohm potentiometer which is connected across the filament terminals, and to the sliding element of which the return leads of the grids and plates are connected.

Neither of these hum eliminating means is connected to the means (detector) for rectifying the signals, as required by the count. Blatterman urges, however, that the third radio frequency transformer, the primary winding of which is in the output circuit of the third radio frequency amplifier tube and the secondary winding of which is in the input circuit of the detector tube, responds to the hum eliminating means defined in the count.

[fol. 32] This radio frequency transformer was in the SCR122 receiving set which Blatterman modified for the purpose of his experiment. It served as an inductive coupling for passing the signals from the third amplifying tube to the fourth amplifying tube in the original set, and to the detector tube in the modified set. It constituted in the latter essential portions of the amplifying and detecting circuit and did not fairly respond to the additional hum eliminating means shown at 9a in the Lowell and Dunmore patent. This latter means is a condenser which is connected to the detector circuit, as shown in the patent drawing. Claims copied from a patent must be construed in the light of the patent disclosure. The provision of some other circuit arrangement not strictly within the terms of the copied claims but which is alleged to accomplish the same or similar results is not sufficient to entitle an applicant to make the copied claims (Gray v. Greene 1927 C. D. 104; 56 App. D. C. 387; 16 F (2d) 332), and likewise is insufficient to establish priority of invention.

We concur in the holding of the examiner that Blatterman's proofs do not establish either conception or reduction to practice prior to Blatterman's filing date of March 10, 1922, which is subsequent to the dates accorded Lowell and Dunmore.

We agree with the examiner that Lowell and Dunmore are joint inventors of the invention in issue. Furthermore,

the records do not support Duncan's contention that Lowell and Dunmore derived the invention from Duncan.

Lowell and Dunmore have filed a motion to amend their preliminary statement. If the findings we have made above are correct, the granting of the motion is not material to their right to the award of priority of invention. The examiner's decision denying this motion has already been affirmed by the First Assistant Commissioner (paper No. 132) who's findings are adopted here.

Pupin's request for recommendation under Rule 126 is denied.

[fol. 33] The decision of the Examiner of Interferences awarding priority of invention of the subject matter in issue to Lowell and Dunmore, a junior party, is affirmed.

Wm. A. Kinnan, First Assistant Commissioner; Eugene Landers, Examiner-in-Chief; P. P. Pierce, Examiner-in-Chief, Board of Appeals.

July 25, 1931.

[fol. 34] U. S. Patent Office, Board of Appeals. July 25, 1931. Mailed.

Received July 27, 1931. John B. Brady, Washington, D. C.

Appeal No. 4823

Hearing: May 12, 1931

OVT.

In the United States Patent Office,

Before the Board of Appeals

DUNCAN

vs.

LOWELL AND DUNMORE

Patent Interference No. 53,155 between an application of Robert D. Duncan, Jr. filed October 20, 1923, Serial No. 669,662, and a patent No. 1,455,141 granted Percival D. Lowell and Francis W. Dunmore, May 15, 1923, on an application filed March 27, 1922, Serial No. 547,111. Radio Receiving Apparatus.

Mr. Philip S. McLean for Duncan.

Mr. John B. Brady and Mr. John Boyie, Jr. for Lowell and Dunmore.

This is an appeal by the junior party, Duncan, from the decision of the Examiner of Interferences awarding priority of invention of the subject matter in issue to the senior party, Lowell and Dunmore.

The issue is stated in two counts of which count 1 will serve as an example. This count reads as follows:

[fol. 35] 1. In an apparatus for receiving radio signals the combination of a source of signal energy, means for amplifying said energy, means for rectifying said energy, means for reproducing said energy, a source of alternating current for supplying power to said amplifying means, and means connected in circuit with said reproducing means for eliminating the hum of said alternating current in the reproducing means.

The counts are copies of claims 20 and 21 of the Lowell and Dunmore patent No. 1,455,141, granted May 15, 1923, on an application filed March 27, 1922. Duncan did not file until after the issuance of said patent and he consequently bears the burden of establishing priority of invention beyond a reasonable doubt.

Both parties have taken proofs which have been introduced in the instant proceeding and also in companion interference No. 53,154, involving the same application and patent on closely related subject matter.

The examiner has held Lowell and Dunmore entitled to October 7, 1921, for conception and December 10, 1921, for reduction to practice. He has further held that if the counts are to be construed to apply to a device capable of receiving telephonic signals appellees are entitled to December 10, 1921, for conception and January 20, 1922, for reduction to practice. We deem all the above dates fairly established by appellees' record.

Regardless of whether the counts are readable on Duncan's Exhibit No. 15 circuit, it is our opinion, for the reasons stated in the examiner's decision and those stated in our decision of this date in companion interference No.

53,154, that Duncan is not entitled to the award of priority of invention in the instant proceeding.

We are of the opinion that the examiner did not err in considering Lowell and Dunmore to be joint inventors.

We adopt the decision of the First Assistant Commissioner (paper No. 74) affirming the decision of the examiner denying the motion of Lowell and Dunmore to amend their preliminary statement.

[fol. 36] The decision of the Examiner of Interferences awarding priority of invention of the subject matter in issue to Lowell and Dunmore, the senior party, is affirmed.

Wm. A. Kinnan, First Assistant Commissioner; Eugene Landers, Examiner-in-Chief; P. P. Pierce, Examiner-in-Chief, Board of Appeals.

July 25, 1931.

[fol. 37] U. S. Patent Office, Board of Appeals. July 25, 1931. Mailed.

Appeal Nos. 4818-19

Hearing: May 12, 1931

OVT.

In the United States Patent Office,

Before the Board of Appeals

PUPIN

v.

LOWELL

and

DUNMORE

v.

BLATTERMAN

Patent Interference No. 51,702 between an application of Michael Pupin filed February 4, 1924, Serial No. 690,586; the patent granted Percival D. Lowell and Francis W.

Dunmore, May 15, 1923, No. 1,455,141, on an application filed March 27, 1922, Serial No. 547,111; and an application of Albert S. Blatterman filed March 10, 1922, Serial No. 542,525. Radio Receiving Apparatus.

Mr. O. H. Eschholz and Messrs. F. W. Lyle and W. H. Whitten for Pupin.

Mr. John B. Brady and Mr. John Boyle for Lowell and Dunmore.

Dr. David P. Wolhaupter for Blatterman.

This case comes up on appeal from the decision of the Examiner of Interferences awarding priority of invention of the subject matter in issue to the party Lowell and Dunmore. Both the junior party Pupin and the senior party Blatterman have appealed.

[fol. 38] The issue is set forth in two counts of which count 1 will serve as an example. This count reads as follows:

1. In an apparatus for receiving radio signals the combination of a source of signal energy, means for amplifying said energy, means for rectifying said energy, a source of alternating current for supplying power to said amplifying means, means for rectifying said current, and a plurality of separate means connected in circuit with said rectifying means for smoothing out the rectified current and supplying power to said amplifying means.

The counts are copies of claims 16 and 1 of the Lowell and Dunmore patent No. 1,455,141, granted May 15, 1923, on an application filed March 27, 1922. Pupin did not file until after the patent issued, and consequently he bears the burden of establishing priority of invention beyond a reasonable doubt.

This case is one of a series of companion interferences Nos. 51,204; 51,702; 53,154 and 53,155, involving the Lowell and Dunmore patent and one or more of the applications of the parties Pupin, Duncan and Blatterman, the Duncan application not being involved in the instant interference. The records submitted by the several parties in the respective interferences in which their applications and patent are involved are the same.

Pupin is relying on the filing date, December 31, 1915, of his application Serial No. 69,566, which matured into patent No. 1,571,458, on February 2, 1926, for constructive reduction to practice. For reasons set forth at length in our decision of this date in companion interference No. 53,154, it is held that the disclosure in the 1915 Pupin application does not fairly support the issue in the instant interference, and accordingly that Pupin is not entitled to the award of priority of invention in this proceeding.

The examiner has accorded Lowell and Dunmore December 10, 1921, for conception and January 20, 1922, for reduction to practice of the invention defined by count 1. We consider these dates to be fairly established by their [fol. 39] proofs. He has further held them entitled to October 7, 1921, for conception and December 10, 1921, for reduction to practice as to count 2. We find no error in these holdings, but do not regard them as of particular moment, since, as will hereinafter appear, Lowell and Dunmore are entitled to the award of priority of invention in this proceeding if restricted for both counts to the dates accorded them for count 1.

The examiner held that the counts are readable on the circuit shown on page 21 of Blatterman's note book (Exhibits A and C). An enlarged view of this circuit has also been introduced as Exhibit E. The circuit is accompanied in the note book by a description of the test made. The entry is dated November 28, 1921. On page 22 is an additional entry signed by Henry Harris who participated in the test. This entry states the test was made on or about November 28, 1921, and that there was no a. c. hum with the set in tune for incoming signals.

The examiner on pages 4 to 6 of his decision has stated several circumstances which tend to discredit Blatterman's testimony relating to the test. We are satisfied for the reasons stated by him the test should not be held a reduction to practice of the circuit tested.

We also believe that the date of the test is not established as November 28, 1921, or any other date as early as December 10, 1921, to which Lowell and Dunmore are clearly entitled for conception. Harris is the only corroborating witness testifying about the test. He could not say from memory unassisted by the written date whether the event occurred late in November or early in December

(X Q. 77). While he stated he believed the test was made on November 28, 1921, and recorded in the note book on the same day, his testimony is in disagreement with that of Blatterman and with the written description to such extent as to clearly indicate he had no definite recollection as to what transpired. Blatterman testified he used the petentiometer which is regularly used in the SCR-122 set (Q. 13) while Harris testified he believed another potentiometer was used (X Q. 112). The written description in the note book says "Tried various condensers at C but [fol. 40] 2 mf. O. K. One mf. is too small. The bigger the better." Harris testified he did not believe change in the size of the condenser had any effect upon the amount of hum (X Q. 108). Blatterman testified he came directly from the laboratory in the research building into the office to write up the description (Q. 41) while Harris testified the writing was done in the same room where the tests were made (X Q. 110).

Blatterman did not leave the Government service at Camp Vail or Fort Monmouth until March 31, 1922 (Blatterman X Q. 198), and it was at this time he turned over his note book to Seibert, the specification engineer, who had charge of records at that place (Blatterman Q. 29; Seibert Q. 12). Harris may well have been requested to make the entry on page 22 of the note book at any time prior to April 1, 1922, and the fact that he stated in the entry that the test was made "on or about" is persuasive that his entry was not contemporaneous with the test but was made at a later date when he was not certain as to the date of the test. Insofar as the testimony of Blatterman's other witnesses, respecting work following the alleged November 28, 1921, test, is concerned said test could well have been made as late as December 15, 1921. As we view the case, Blatterman has no satisfactory corroboration establishing conception as early as December 10, 1921.

The examiner has held that assuming Blatterman was the first to conceive as to count 1, he still can not prevail because he was not exercising due diligence at the time Lowell and Dunmore entered the field. We consider this holding sound.

We adopt the decision of the First Assistant Commission (paper No. 127) affirming the decision of the examiner denying the motion of Lowell and Dunmore to amend their preliminary statement.

Pupin's request for recommendation under Rule 126 is denied.

[fol. 41] The decision of the Examiner of Interferences awarding priority of invention of the subject matter in issue to Lowell and Dunmore, a junior party, is affirmed.

Wm. A. Kinnan, First Assistant Commissioner; Eugene Landers, Examiner-in-Chief; P. P. Pierce, Examiner-in-Chief, Board of Appeals.

July 25, 1931.

[fol. 42] U. S. Patent Office, Board of Appeals. July 25, 1931, mailed.

Appeal No. 4825

Hearing: May 12, 1931

OVT.

In the United States Patent Office,

Before the Board of Appeals

LOWELL AND DUNMORE

vs.

BLATTERMAN

Patent Interference No. 51,204 between a patent No. 1,455,141 granted Percival D. Lowell and Francis W. Dunmore, May 15, 1923, on an application filed March 27, 1922, Serial No. 547,111; and an application of Albert S. Blatterman filed March 10, 1922, Serial No. 542,525. Radio Receiving Apparatus.

Mr. John B. Brady and Mr. John Boyle for Lowell & Dunmore.

Mr. David P. Wolhaupter for Blatterman.

This is an appeal by the senior party, Blatterman, from the decision of the Examiner of Interferences awarding priority of invention of the subject matter in issue to the junior party, Lowell and Dunmore.

The issue is stated in three counts, of which count 1 will serve as an example. This count reads as follows:

1. In an apparatus for the reception of radia signals the combination of a source of signal energy, a plurality of [fol. 43] vacuum tubes having grid, filament and plate electrodes, a detector, circuits interconnecting said electrodes and said detector, a transformer having a primary winding connected to a source of alternating current, secondary windings, a two electrode valve rectifier having a filament and a plate, connections between one of said secondary windings and the filament of said rectifier, connections between another of said secondary windings and said rectifier whereby direct current is suppied to the plate circuits of said vacuum tubes, another of said secondary windings connected to supply heating current to the filaments of said vacuum tubes and a capacity and resistance connected in said plate circuits for eliminating the hum of said alternating current in said apparatus.

The counts are copies of claims 15, 19 and 18 respectively of the Lowell and Dunmore patent No. 1,455,141.

This is one of a series of companion interferences Nos. 51,204; 51,702 and 53,154 involving said patent and Blatterman's application Serial No. 542,525, filed March 10, 1922. The issues in the three interferences are closely related. Both parties have taken proofs relating to all three interferences.

The examiner has accorded Lowell and Dunmore December 10, 1921, for conception and January 20, 1922, for reduction to practice. We concur in his holdings that their proofs fairly establish these dates.

Assuming that Blatterman's alleged test on November 28, 1921, involved the instant issue, as held by the examiner, we are satisfied that Blatterman is not entitled to the award of priority of invention in the instant proceeding. Our reasons for so holding are discussed in our decision of this date in companion interference No. 51,702, and need not be repeated herein.

Count 3 of the instant interference is the count of companion interference No. 53,153, which has been consolidated with the instant interference. We adopt the decision of denying the motion of Lowell and Dunmore to amend their the First Assistant Commissioner (paper No. 80 in inter-

ference No. 53,153) affirming the decision of the examiner preliminary statement.

[fols. 44-47] The decision of the examiner of interferences awarding priority of invention of the subject matter in issue to Lowell and Dunmore, the junior party, is affirmed.

Wm. A. Kinnan, First Assistant Commissioner; Eugene Landers, Examiner-in-Chief; P. P. Pierce, Examiner-in-Chief, Board of Appeals.

July 25, 1931.

[fol. 48] EXHIBIT "B"

Attached to Plaintiffs' Affidavit in Opposition to the Motion to Dismiss

Equity Bills Filed by the United States against Dubilier Condenser Corporation, Wilmington, Delaware; Morkrum Company, Portland, Maine; Percival D. Lowell, Brooklyn, New York; Francis W. Dunmore, Washington, D. C.; and Answers of the Defendants

Concerning the Socket Power Patents of Percival D. Lowell and Francis W. Dunmore, 1,455,141, May 15, 1923; 1,606,212, Nov. 9, 1926; 1,635,117, July 5, 1927

[fol. 49] For the Plaintiff:

United States of America, Charles B. Rugg, Assistant Attorney General; Alexander Holtzoff, Special Assistant to Atty. General.

For the Defendants:

Francis W. Dunmore—John B. Brady, Washington, D. C.; John Boyle, Jr., Washington, D. C., of Counsel; Wm. D. Shoemaker, Washington, D. C., of Counsel.

Percival D. Lowell—Raiemond E. Dee, New York City; John B. Brady, Washington, D. C., of Counsel.

Dubilier Condenser Corporation—James H. Hughes, Jr., Wilmington, Delaware; Edwards, Bower & Pool, New York City, of Counsel.

Morkrum Company—McLean, Fogg & Southard, Augusta, Maine; John B. Brady, Washington, D. C., of Counsel.

[fol. 50] IN THE DISTRICT COURT OF THE UNITED STATES FOR THE EASTERN DISTRICT OF NEW YORK

In Equity

No. 4934

UNITED STATES OF AMERICA, Plaintiff,

v.

PERCIVAL D. LOWELL, Defendant

BILL OF COMPLAINT

To the Honorable Judges of the District Court of the United States for the Eastern District of New York:

United States of America bring this bill of complaint against Percival D. Lowell, and for cause of action alleges:

I. This is a suit in equity brought by the United States of America as plaintiff.

II. As the plaintiff is informed and believes, the defendant Percival D. Lowell is a citizen of the State of New York and an inhabitant of the Eastern District of New York.

III. At all times hereinafter mentioned, the Bureau of Standards was and now is a subdivision of the Department of Commerce. The functions of said Bureau of Standards comprise the custody of standards; the comparison of the standards used with the standards adopted or recognized by the Government; the construction, the testing and the calibration of standards; and the conduct of scientific investigation, experimentation, studies and research in general.

IV. At all times hereinafter mentioned the Bureau of Standards maintained and now maintains a radio section. The said radio section carries on calibration of various radio instruments, and conducts scientific investigation, experiments, studies and research in the radio field and pre-
[fol. 51] pares and publishes scientific papers containing the results of its work for the purpose of disseminating knowledge to the parties interested therein and to the pub-

lic generally. For the purpose of carrying on its work the said radio section maintains a radio laboratory.

V. As the plaintiff is informed and believes, the defendant Percival D. Lowell is a physicist and is trained in carrying on research and experimentation in various branches of physics and the science of electricity, including radio. Between February 14, 1913, and July 15, 1922, the said defendant was employed in said radio section in the successive capacities of laboratory apprentice and associate physicist. It was one of the duties of said defendent to carry on investigation, research and experimentation in such problems relating to radio and wireless as might be assigned to him by his superiors, and to report the results thereof to his said superiors.

VI. In the course of his employment as aforesaid, there was assigned to said defendant Lowell by his superiors in said radio section, for investigation and research, the problem of developing an amplifier otherwise known as a "loudspeaker", capable of operation by alternating electric current as supplied by electric power companies for residences and other buildings.

VII. As the plaintiff is informed and believes, the said defendant Lowell pursuant to the aforesaid directions and instructions given him by his superiors, proceeded to carry on studies, research, investigation and experimentation in said problem. The aforesaid work was done by said defendant Lowell at said radio laboratory of the Bureau of Standards; with apparatus, and materials which were the property of the plaintiff, and during his usual hours of employment. The aforesaid work was done by said defendant Lowell as one of the duties of his employment as aforesaid, and the results and product of said work are the property of the plaintiff.

VIII. As the plaintiff is informed and believes, the said defendant Lowell was assisted in said work by one Francis [fol. 52] W. Dunmore. The said Dunmore was then also an employee of the Bureau of Standards, occupying a position similar to that of the defendant Lowell and performing duties similar to those of the said defendant. The said Dunmore so assisted and cooperated with the defendant Lowell at the direction and orders of his superiors.

IX. Some time prior to March 27, 1922, the defendant Lowell and the said Dunmore, solved the problem assigned to them by their superiors as aforesaid and completed the said work hereinabove referred to by developing and inventing an amplifier or "loud speaker" capable of being satisfactorily operated by alternating current received from the standard residence lighting power. The aforesaid development and invention, and all rights and interests therein are the property of the United States.

X. As the plaintiff is informed and believes, the defendant Percival D. Lowell and the said Francis W. Dunmore, in disregard of their duties to the plaintiff, and ignoring the rights of the plaintiff, and without the knowledge or approval of the plaintiff, filed in the United States Patent Office on March 21, 1922, application for letters patent on said invention. Thereafter on November 9, 1926, letters patent of the United States numbered 1,606,212 and covering the said invention were issued to said Percival D. Lowell and Francis W. Dunmore on the basis of the said application.

XI. The aforesaid letters patent are in equity and good conscience, the property of the United States. Although the plaintiff demanded of the defendant Lowell and the said Dunmore that the aforesaid letters patent be conveyed to the plaintiff, the said defendant Lowell and the said Dunmore have failed, neglected and refused to comply with said demand.

XII. As the plaintiff is informed and believes, the said defendant Lowell and the said Dunmore have unlawfully and illegally and in disregard of the plaintiff's rights purported to grant an exclusive license under the said letters patent to Dubilier Condenser Corporation, a corporation [fol. 53] organized and existing under the laws of the State of Delaware.

XIII. As the plaintiff is informed and believes, the said defendant Lowell and the said Dunmore have at various times collected and received various sums of money from divers persons as royalties or license fees in connection with and arising out of said letters patent, which said moneys in equity and good conscience belong to the plaintiff, and the said defendant and the said Dunmore hold the same in trust and for the benefit of the plaintiff.

XIV. The said Francis W. Dunmore and Dubilier Condenser Corporation are not made parties to this action because they are not within the jurisdiction of this Court, in that as the plaintiff is informed and believes, the said Dunmore is an inhabitant of the District of Columbia and the said Dubilier Condenser Corporation is an inhabitant of the District of Delaware.

XV. The plaintiff has no remedy at law.

Wherefore the plaintiff prays this Honorable Court as follows:

1. That it be adjudged and decreed that the plaintiff is the owner of the invention hereinabove referred to and the defendant holds his interest therein as trustee and for the benefit of the plaintiff.

2. That it be adjudged and decreed that the plaintiff is the owner of letters patent of the United States 1,606,212 and issued on November 9, 1926, and that the defendant holds his interest as trustee and for the benefit of the plaintiff.

3. That the defendant be directed and compelled to assign, transfer, and convey to the plaintiff all his right, title and interest in and to the aforesaid invention and the aforesaid letters patent.

4. That the defendant be compelled and directed to account and pay over to the plaintiff all moneys received by him in connection with or arising out of the said invention and the said letters patent.

[fol. 54] 5. That the plaintiff have such other and further relief as to the court may seem just, together with the costs of this action.

6. That this Honorable Court issue its writ of subpoena in due form of law and according to the course and practice of this court directed to the said defendant Percival D. Lowell, commanding him at a certain date and under a certain penalty to be therein specified, to appear before this Honorable Court to answer all and singular the matters hereinbefore set forth and complained of and to stand by

and abide and perform all of the orders and decrees of the court herein.

Charles B. Rugg, Assistant Attorney General. Alexander Holtzoff, Special Assistant to the Attorney General. Howard W. Ameli, United States Attorney for the Eastern District of New York.

[fol. 55] State of New York,
County of Kings, ss:

Albert D. Smith, being duly sworn, deposes and says that he is an Assistant United States Attorney for the Eastern District of New York, duly appointed according to law.

That he has read the foregoing complaint and knows the contents thereof, and the same is true of his own knowledge, except as to those matters therein stated to be alleged upon information and belief, and as to those matters he believes it to be true.

Deponent further says that the reason why this verification is made by deponent and not by plaintiff is because the plaintiff is a corporation sovereign.

Deponent further says that the source of his information and the grounds for his belief as to the facts heretofore stated are from papers and information on file in this office.

Albert D. Smith.

Sworn to before me this 19th day of April, 1930.

Edw. A. Fay, United States Commissioner, Eastern District of New York.

[fol. 56] In the District Court of the United States for the Eastern District of New York

In Equity

No. 4934

United States of America, Plaintiff,

v.

Percival D. Lowell, Defendant

Answer

Now comes the defendant above named and answers plaintiff's bill of complaint as follows:

I. Defendant admits the allegations contained in paragraph I of the bill of complaint.

II. Defendant admits the allegations contained in paragraph II of the bill of complaint.

III. On information and belief defendant denies the allegations contained in paragraph III of plaintiff's bill of complaint.

IV. Answering paragraph IV of the bill of complaint defendant says that he has no knowledge sufficient to form a belief of the matters therein alleged, and therefore neither admits nor denies the same but leaves the plaintiff to make such proof thereof as it may be advised if the allegations in said paragraph are deemed material.

V. As to the allegations contained in paragraph V defendant admits the allegations contained in the first two sentences thereof but denies the allegations contained in the last sentence thereof.

VI. The defendant denies each and every of the allegations of numbered paragraph VI of the plaintiff's bill of complaint.

VII. Defendant denies each and every of the allegations of paragraph numbered VII of plaintiff's bill of complaint.

[fol. 57] VIII. Defendant denies each and every of the allegations of paragraph numbered VIII of plaintiff's bill of complaint.

IX. The defendant denies each and every of the allegations of paragraph numbered IX of the plaintiff's bill of complaint.

X. As to matters alleged in paragraph X of the bill of complaint defendant admits that on March 21, 1922 he jointly filed with Francis W. Dunmore an application for United States Letters Patent which issued as Number 1,606,212 on November 9, 1926. As to all other allegations of said paragraph X defendant denies the same.

XI. Defendant denies each and every of the allegations contained in paragraph XI of the bill of complaint and alleges that no officer or agency of the United States Government was or is authorized to acquire the invention of said Letters Patent 1,606,212 on behalf of the United States Government.

XII. The defendant admits that he granted with the said Dunmore a license to Dubilier Condenser Corporation but defendant denies each and every other allegation of paragraph XII of plaintiff's bill of complaint.

XIII. Answering paragraph XIII of plaintiff's bill of complaint, defendant admits that he has at various times collected and received various sums of money from divers persons as royalties or license fees in connection with and arising out of Letters Patent 1,606,212, but defendant denies that any of the said money belongs to plaintiff and denies that he holds the said money or any other property for the benefit of the plaintiff and further answering defendant avers that plaintiff has acquiesced in the collection and disbursement of said moneys and is not entitled to recover the same.

XIV. Answering paragraph XIV of plaintiff's bill of complaint defendant avers that he has no knowledge sufficient to form a belief and therefore neither affirms or denies the same and leaves the plaintiff to proof thereof if the allegations in said paragraph are deemed material.

[fol. 58] XV. Answering paragraph XV of plaintiff's bill of complaint defendant denies the allegation contained therein.

Wherefore having duly answered the bill of complaint this defendant denies that the plaintiff is entitled to the relief demanded or any part of the same and prays that the bill of complaint be dismissed with costs.

Percival D. Lowell. Raiemond E. Dee, Solicitor for Defendant. John B. Brady, of Counsel for Defendant.

County of Queens,
State of New York, ss:

Percival D. Lowell, being duly sworn, deposes and says that he is the defendant in this suit; that he has read the foregoing answer to the bill of complaint in this suit and knows the contents thereof and that the same is true to his own knowledge except as to the matters therein stated to be alleged upon information and belief and that as to those matters he believes it to be true.

Percival D. Lowell.

Sworn to and subscribed before me this 15th day of May, 1930.

Geo. H. Van Siclen, Notary Public. (Seal.)

[fol. 59] IN THE DISTRICT COURT OF THE UNITED STATES FOR THE EASTERN DISTRICT OF NEW YORK

In Equity.

No. 4935

UNITED STATES OF AMERICA, Plaintiff,

v.

PERCIVAL D. LOWELL, Defendant

BILL OF COMPLAINT

To the Honorable Judges of the District Court of the United States for the Eastern District of New York:

United States of America brings this its bill of complaint against Percival D. Lowell, and for cause of action alleges:

I. This is a suit in equity brought by the United States of America as plaintiff.

II. As the plaintiff is informed and believes, the defendant Percival L. Lowell is a citizen of the State of New York and an inhabitant of the Eastern District of New York.

III. At all times hereinafter mentioned, the Bureau of Standards was and now is a subdivision of the Department of Commerce. The functions of said Bureau of Standards comprise the custody of standards; the comparison of the standards used with the standards adopted or recognized by the Government; the construction, the testing and the calibration of standards; and the conduct of scientific investigation, experimentation, studies and research in general.

IV. At all times hereinafter mentioned the Bureau of Standards maintained and now maintains a radio section. The said radio section carries on calibration of various radio instruments, and conducts scientific investigation,

experiments, studies and research in the radio field, and prepares and publishes scientific papers containing the re- [fol. 60] sults of its work for the purpose of disseminating knowledge to the parties interested therein and to the public generally. For the purpose of carrying on its work the said radio section maintains a radio laboratory.

V. As the plaintiff is informed and believes, the defendant Percival D. Lowell is a physicist and is trained in carrying on research and experimentation in various branches of physics and the science of electricity, including radio. Between February 4, 1913, and July 15, 1922, the said defendant was employed in said radio section in the successive capacities of laboratory apprentice and associate physicist. It was one of the duties of said defendant to carry on investigation, research and experimentation in such problems relating to radio and wireless as might be assigned to him by his superiors, and to report the results thereof to his said superiors.

VI. In the course of his employment as aforesaid, there was assigned to said defendant Lowell by his superiors in said radio section, for investigation and research, the problem of developing a radio receiving set capable of operation by alternating electric current as supplied by electric power companies for residences and other buildings, so that the use of electric batteries might be eliminated in connection with radio receiving apparatus.

VII. As the plaintiff is informed and believes, the said defendant Lowell pursuant to the aforesaid directions and instructions given him by his superiors, proceeded to carry on studies, research, investigation and experimentation in said problem. The aforesaid work was done by said defendant Lowell at said radio laboratory of the Bureau of Standards; with apparatus and materials which were the property of the plaintiff; and during his usual hours of employment. The aforesaid work was done by said defendant Lowell as one of the duties of his employment as aforesaid, and the results and product of said work are the property of the plaintiff.

VIII. As the plaintiff is informed and believes, the said defendant Lowell was assisted in said work by one Francis

W. Dunmore. The said Dunmore was then also an em- [fol. 61] ployee of the Bureau of Standards, occupying a position similar to that of the defendant Lowell and performing duties similar to those of the said defendant. The said Dunmore so assisted and cooperated with the defendant Lowell at the direction and orders of his superiors.

IX. Some time prior to March 27, 1922, the defendant Lowell and the said Dunmore, solved the problem assigned to them by their superiors as aforesaid and completed the said work hereinabove referred to by developing and inventing a radio receiving apparatus capable of being satisfactorily operated by alternating current received from the standard residence lighting power. The aforesaid development and invention, and all rights and interests therein are the property of the United States.

X. As the plaintiff is informed and belives, the defendant Percival D. Lowell and the said Francis W. Dunmore, in disregard of their duties to the plaintiff, and ignoring the rights of the plaintiff, and without the knowledge or approval of the plaintiff, filed in the United States Patent Office on March 27, 1922, an application for letters patent on said invention. Thereafter on May 15, 1923, letters patent of the United States numbered 1,455,141 and covering the said invention were issued to said Percival D. Lowell and Francis W. Dunmore on the basis of the said application.

XI. The aforesaid letters patent are in equity and good conscience, the property of the United States. Although the plaintiff demanded of the defendant Lowell and the said Dunmore that the aforesaid letters patent be conveyed to the plaintiff, the said defendant Lowell and the said Dunmore have failed, neglected and refused to comply with said demand.

XII. As the plaintiff is informed and believes, the said defendant Lowell and the said Dunmore have unlawfully and illegally and in disregard of the plaintiff's rights purported to grant an exclusive license under the said letters patent to Dubilier Condenser Corporation, a corporation organized and existing under the laws of the State of Delaware.

[fol. 62] XIII. As the plaintiff is informed and believes, the said defendant Lowell and the said Dunmore have at various times collected and received various sums of money from divers persons as royalties or license fees in connection with and arising out of said letters patent, which said moneys in equity and good conscience belong to the plaintiff, and the said defendant and the said Dunmore hold the same in trust and for the benefit of the plaintiff.

XIV. The said Francis W. Dunmore and Dubilier Condenser Corporation are not made parties to this action because they are not within the jurisdiction of this Court, in that, as the plaintiff is informed and believes, the said Dunmore is an inhabitant of the District of Columbia and the said Dubilier Condenser Corporation is an inhabitant of the District of Columbia.

XV. The plaintiff has no remedy at law.

Wherefore, the plaintiff prays this Honorable Court as follows:

1. That it be adjudged and decreed that the plaintiff is the owner of the invention hereinabove referred to and the defendant holds his interest therein as trustee and for the benefit of the plaintiff.

2. That it be adjudged and decreed that the plaintiff is the owner of letters patent of the United States numbered 1,455,141 and issued on May 15, 1923, and that the defendant holds his interest therein as trustee and for the benefit of the plaintiff.

3. That the defendant be directed and compelled to assign, transfer, and convey to the plaintiff all his right, title and interest in and to the aforesaid invention and the aforesaid letters patent.

4. That the defendant be compelled and directed to account and pay over to the plaintiff all moneys received by him in connection with or arising out of the said invention and the said letters patent.

[fol. 63] 5. That the plaintiff have such other and further relief as to the court may seem just, together with the cost of this action.

6. That this Honorable Court issue its writ of subpœna in due form of law and according to the court and practice of this court directed to the said defendant Percival D. Lowell, commanding him at a certain date and under a certain penalty to be therein specified, to appear before this Honorable Court to answer all and singular the matters hereinbefore set forth and complained of and to stand by and abide and perform all of the orders and decrees of the court herein.

Charles B. Rugg, Assistant Attorney General. Alexander Holtzoff, Special Assistant to the Attorney General, of Counsel. Howard W. Ameli, United States Attorney for the Eastern District of New York.

[fol. 64] STATE OF NEW YORK,
County of Kings, ss:

Albert D. Smith, being duly sworn, deposes and says that he is an Assistant United States Attorney for the Eastern District of New York, duly appointed according to law.

That he has read the foregoing complaint and knows the contents thereof, and the same is true of his own knowledge, except as to those matters therein stated to be alleged upon information and belief, and as to those matters he believes it to be true.

Deponent further says that the reason why this verification is made by deponent and not by plaintiff is because the plaintiff is a corporation sovereign.

Deponent further says that the source of his information and the grounds for his belief as to the facts heretofore stated are from papers and information on file in this office.

Albert D. Smith.

Sworn to before me this 19th day of April, 1930.
Edw. A. Fay, United States Commissioner Eastern District of New York.

[fol. 65] IN THE DISTRICT COURT OF THE UNITED STATES FOR THE EASTERN DISTRICT OF NEW YORK

In Equity

No. 4935

UNITED STATES OF AMERICA, Plaintiff,

v.

PERCIVAL D. LOWELL, Defendant

ANSWER

Now comes the defendant above named and answers plaintiff's bill of complaint as follows:

I. Defendant admits the allegations contained in paragraph I of the bill of complaint.

II. Defendant admits the allegations contained in paragraph II of the bill of complaint.

III. On information and belief defendant denies the allegations contained in paragraph III of plaintiff's bill of complaint.

IV. Answering paragraph IV of the bill of complaint defendant says that he has no knowledge sufficient to form a belief of the matters therein alleged, and therefore neither admits nor denies the same but leaves the plaintiff to make such proof thereof as it may be advised if the allegations in said paragraph are deemed material.

V. As to the allegations contained in paragraph V, defendant admits the allegations contained in the first two sentences thereof but denies the allegations contained in the last sentence thereof.

VI. The defendant denies each and every of the allegations of numbered paragraph VI of the plaintiff's bill of complaint.

[fol. 66] VII. The defendant denies each and every of the allegations of numbered paragraph VII of the plaintiff's bill of complaint.

VIII. Defendant denies each and every of the allegations of numbered paragraph VIII of plaintiff's bill of complaint.

IX. The defendant denies each and every of the allegations of paragraph numbered IX of the plaintiff's bill of complaint.

X. As to matters alleged in paragraph X of the bill of complaint, defendant admits that on March 27, 1922 he jointly filed with Francis W. Dunmore an application for United States Letters Patent which issued as Number 1,455,141 on May 15, 1923. As to all other allegations of said paragraph X, defendant denies the same.

XI. Defendant denies each and every of the allegations contained in paragraph XI of the bill of complaint and alleges that no officer or agency of the United States Government was or is authorized to acquire the invention of said Letters Patent 1,455,141 on behalf of the United States Government.

XII. The defendant admits that he granted with the said Dunmore a license to Dubilier Condenser Corporation but defendant denies each and every other allegation of paragraph XII of plaintiff's bill of complaint.

XIII. Answering paragraph XIII of plaintiff's bill of complaint, defendant admits that he has at various times collected and received various sums of money from divers persons as royalties or license fees in connection with and arising out of Letters Patent 1,455,141, but defendant denies that any of the said money belongs to plaintiff and denies that he holds the said money or any other property for the benefit of the plaintiff and further answering defendant avers that plaintiff has acquiesced in the collection and disbursement of said moneys and is not entitled to recover the same.

XIV. Answering paragraph XIV of plaintiff's bill of complaint defendant avers that he has no knowledge suf- [fol. 67] ficient to form a belief and therefore neither affirms or denies the same and leaves the plaintiff to proof thereof if the allegations in said paragraph are deemed material.

XV. Answering paragraph XV of plaintiff's bill of complaint defendant denies the allegation contained therein.

Wherefore, having duly answered the bill of complaint, this defendant denies that the plaintiff is entitled to the relief demanded or any part of the same and prays that the bill of complaint be dismissed with costs.

Percival D. Lowell. Raiemond E. Dee, Solicitor for Defendant. John B. Brady, of Counsel for Defendant.

County of Queens,
State of New York, ss:

Percival D. Lowell, being duly sworn, deposes and says that he is the defendant in this suit; that he has read the foregoing answer to the bill of complaint in this suit and knows the contents thereof and that the same is true to his own knowledge except as to the matters therein stated to be alleged upon information and belief and that as to these matters he believes it to be true.

Percival D. Lowell.

Sworn to and subscribed before me this 15th day of May, 1930.

Geo. H. Van Siclen, Notary Public. (Seal.)

[fol. 68] In the Supreme Court of the District of Columbia

In Equity

No. 51322

United States of America, Plaintiff,

v.

Francis W. Dunmore, 3411 Rodman Street N. W., Defendant

Bill of Complaint

To the Supreme Court of the District of Columbia:

Plaintiffs state as follows:

I. This is a suit in equity brought by the United States of America as plaintiff.

II. As the plaintiff is informed and believes, the defendant Francis W. Dunmore is a citizen of the United States and a resident of the District of Columbia.

III. At all times hereinafter mentioned, the Bureau of Standards was and now is a subdivision of the Department of Commerce. The functions of said Bureau of Standards comprise the custody of standards; the comparison of the standards used with the standards adopted or recognized by the Government; the construction, the testing and the calibration of standards; and the conduct of scientific investigation, experimentation, studies, and research in general.

IV. At all times hereinafter mentioned the Bureau of Standards maintained and now maintains a radio section. The said radio section carries on calibration of various radio instruments, and conducts scientific investigation, experiments, studies and research in the radio field, and prepares and publishes scientific papers containing the results of its work for the purpose of disseminating knowledge to [fol. 69] the parties interested therein and to the public generally. For the purpose of carrying on its work the said radio section maintains a radio laboratory.

V. As the plaintiff is informed and believes, the defendant Francis W. Dunmore, is a physicist and is trained in carrying on research and experimentation in various branches of physics and the science of electricity, including radio. From January 14, 1918, to date the said defendant was employed in said radio section in the successive capacities of laboratory assistant and associate physicist. It was one of the duties of said defendant to carry on investigation, research and experimentation in such problems relating to radio and wireless as might be assigned to him by his superiors, and to report the results thereof to his said superiors, and to assist, advise and cooperate with other employees of said radio section in carrying on tasks assigned to them.

VI. Between February 4, 1913, and July 15, 1922, one Percival D. Lowell was employed in said radio section in a capacity similar to that of the defendant, his duties being the same as those of the defendant. In the course of his employment as aforesaid, there was assigned to said Low-

ell by his superiors in said radio section, for investigation and research, the problem of developing a radio receiving set capable of operation by alternating electric current as supplied by electric power companies for residences and other buildings, so that the use of electric batteries might be eliminated in connection with radio receiving apparatus.

VII. As the plaintiff is informed and believes, the said Lowell pursuant to the aforesaid directions and instructions given him by his superiors, proceeded to carry on studies, research, investigations and experimentation in said problem, and the defendant Dunmore assisted, advised and cooperated with the said Lowell in carrying on said work. The aforesaid work was done by the said Lowell and the defendant Dunmore at said radio laboratory of the Bureau of Standards, with apparatus and materials which were the property of the plaintiff and during their usual hours of employment. The aforesaid work was done by [fol. 70] said Lowell and the defendant Dunmore as one of the duties of their employment as aforesaid, and the results and product of said work are the property of the plaintiff.

VIII. Some time prior to March 27, 1922, the defendant Dunmore and the said Lowell, solved the aforesaid problem and completed the said work hereinbefore referred to by developing and inventing a radio receiving apparatus capable of being satisfactorily operated by alternating current received from the standard residence lighting power. The aforesaid development and invention, and all rights and interests therein are the property of the United States.

IX. As the plaintiff is informed and believes, the defendant Dunmore and the said Lowell, in disregard of their duties to the plaintiff, and ignoring the rights of the plaintiff, and without the knowledge or approval of the plaintiff, filed in the United States Patent Office on March 27, 1922, an application for letters patent on said invention. Thereafter on May 15, 1923, letters patent of the United States numbered 1,455,141, and covering the said invention were issued to said Percival D. Lowell and Francis W. Dunmore on the basis of the said application.

X. The aforesaid letters patent are in equity and good conscience, the property of the United States. Although

the plaintiff demanded of the defendant Dunmore and the said Lowell that the aforesaid letters patent be conveyed to the plaintiff, the said defendant Dunmore and the said Lowell have failed, neglected and refused to comply with said demand.

XI. As the plaintiff is informed and believes, the said defendant Dunmore and the said Lowell have unlawfully and illegally and in disregard of the plaintiff's rights purported to grant an exclusive license under the said letters patent to Dubilier Condenser Corporation, a corporation organized and existing under the laws of the State of Delaware.

XII. As the plaintiff is informed and believes, the said defendant Dunmore and the said Lowell have at various times collected and received various sums of money from [fol. 71] divers persons as royalties or license fees in connection with and arising out of said letters patent, which said moneys in equity and good conscience belong to the plaintiff, and the said defendant and the said Lowell hold the same in trust and for the benefit of the plaintiff.

XIII. The said Percival D. Lowell and Dubilier Condenser Corporation are not made parties to this action because they are not within the jurisdiction of this Court, in that as the plaintiff is informed and believes, the said Lowell is an inhabitant of the Eastern District of New York and the said Dubilier Condenser Corporation is an inhabitant of the District of Delaware.

XIV. The plaintiff has no remedy at law.

Wherefore, the plaintiff prays this Honorable Court as follows:

1. That it be adjudged and decreed that the plaintiff is the owner of the invention hereinabove referred to and the defendant holds his interest therein as trustee and for the benefit of the plaintiff.

2. That it be adjudged and decreed that the plaintiff is the owner of letters patent of the United States numbered 1,455,141 and issued on May 15, 1923, and that the defendant holds his interest therein as trustee and for the benefit of the plaintiff.

3. That the defendant be directed and compelled to assign, transfer, and convey to the plaintiff all his right, title and interest in and to the aforesaid invention and the aforesaid letters patent.

7. That the defendant be compelled and directed to account and pay over to the plaintiff all moneys received by him in connection with or arising out of the said invention and the said letters patent.

5. That the plaintiff have such other and further relief as to the court may seem just, together with the costs of this action.

[fol. 72] 6. That this Honorable Court issue its writ of subpoena in due form of law and according to the course and practice of this court directed to the said defendant Francis W. Dunmore, commanding him at a certain date and under a certain penalty to be therein specified, to appear before this Honorable Court to answer all and singular the matters hereinbefore set forth and complained of and to stand by and abide and perform all of the orders and decrees of the court herein.

Charles B. Rugg, Assistant Attorney General. Alexander Holtzoff, Special Assistant to the Attorney General, of Counsel. Leo A. Rover, United States Attorney for the District of Columbia.

[fol. 73] IN THE SUPREME COURT OF THE DISTRICT OF COLUMBIA

In Equity

No. 51322

UNITED STATES OF AMERICA, Plaintiff,

v.

FRANCIS W. DUNMORE, Defendant

ANSWER

Now comes the defendant above named and answers plaintiff's bill of complaint as follows:

I. Defendant admits the allegations contained in paragraph I of the bill of complaint.

II. Defendant admits the allegations contained in paragraph II of the bill of complaint.

III. On information and belief defendant denies the allegations contained in paragraph III of plaintiff's bill of complaint.

IV. Answering paragraph IV of the bill of complaint defendant says that he has no knowledge sufficient to form a belief of the matters therein alleged, and therefore neither admits nor denies the same but leaves the plaintiff to make such proof thereof as it may be advised if the allegations in said paragraph are deemed material.

V. As to the allegations contained in paragraph V, defendant admits the allegations contained in the first two sentences thereof but denies the allegations contained in the last sentence thereof.

VI. The defendant denies each and every of the allegations of numbered paragraph VI of the plaintiff's bill of complaint.

VII. The defendant denies each and every of the allegations of numbered paragraph VII of the plaintiff's bill of complaint.

[fol. 74] VIII. The defendant denies each and every of the allegations of paragraph numbered VIII of the plaintiff's bill of complaint.

IX. As to matters alleged in paragraph IX of the bill of complaint, defendant admits that on March 27, 1922 he jointly filed with the said Percival D. Lowell an application for Letters Patent of the United States which issued as Letters Patent 1,455,141 on May 15, 1923. As to all other allegations of said paragraph IX defendant denies the same.

X. Defendant denies each and every of the allegations contained in paragraph X of the bill of complaint and alleges that no officer or agency of the United States Government was or is authorized to acquire the invention of said Letters Patent 1,455,141 on behalf of the United States Government.

XI. The defendant admits that he granted with the said Lowell a license to Dubilier Condenser Corporation but defendant denies each and every other allegation of paragraph XI of plaintiff's bill of complaint.

XII. Answering paragraph XII of plaintiff's bill of complaint, defendant admits that he has at various times collected and received various sums of money from divers persons as royalties or license fees in connection with and arising out of Letters Patent 1,455,141, but defendant denies that any of the said money belongs to plaintiff and denies that he holds the said money or any other property for the benefit of the plaintiff, and further answering, defendant avers that plaintiff has acquiesced in the collection and disbursement of said moneys and is not entitled to recover the same.

XIII. Answering paragraph XIII of plaintiff's bill of complaint defendant avers that he has no knowledge sufficient to form a belief and therefore neither affirms or denies the same and leaves the plaintiff to proof thereof if the allegations in said paragraph are deemed material.

XIV. Answering paragraph XIV of plaintiff's bill of complaint defendant denies the allegation contained therein.

[fol. 75] Wherefore, having duly answered the bill of complaint, this defendant denies that the plaintiff is entitled to the relief demanded or to any part of the same and prays that the bill of complaint be dismissed with costs.

Francis W. Dunmore. John B. Brady, Solicitor for Defendant.

City of Washington,
District of Columbia, ss:

Francis W. Dunmore, being duly sworn, deposes and says that he is the defendant in this suit, that he has read the foregoing answer to the bill of complaint in this suit and knows the contents thereof and that the same is true to his own knowledge except as to the matters therein stated to be alleged upon information and belief and that as to those matters he believes it to be true.

Francis W. Dunmore.

Sworn to and subscribed before me this 21st day of May, 1930.

James E. Brown, Notary Public, D. C. (Seal.)

My commission expires March 31st, 1931.

[fol. 76] IN THE SUPREME COURT OF THE DISTRICT OF COLUMBIA

In Equity.

No. 51323

UNITED STATES OF AMERICA, Plaintiff,

v.

FRANCIS W. DUNMORE, Defendant.

BILL OF COMPLAINT

To the Supreme Court of the District of Columbia:

Plaintiffs state as follows:

I. This is a suit in equity brought by the United States of America as plaintiff.

II. As the plaintiff is informed and believes, the defendant Francis W. Dunmore is a citizen of the United States and a resident of the District of Columbia.

III. At all times hereinafter mentioned, the Bureau of Standards was and now is a subdivision of the Department of Commerce. The functions of said Bureau of Standards comprise the custody of standards; the comparison of the standards used with the standards adopted or recognized by the Government; the construction, the testing and the calibration of standards; and the conduct of scientific investigation, experimentation, studies and research in general.

IV. At all times herein after mentioned the Bureau of Standards maintained and now maintains a radio section. The said radio section carries on calibration of various radio instruments, and conducts scientific investigation, experiments, studies and research in the radio field, and

prepares and publishes scientific papers containing the results of its work for the purpose of disseminating knowledge to the parties interested therein and to the public generally. For the purpose of carrying on its work the said radio section maintains a radio laboratory.

[fol. 77] V. As the plaintiff is informed and believes, the defendant Francis W. Dunmore is a physicist and is trained in carrying on research and experimentation in various branches of physics and the science of electricity, including radio. From January 14, 1918, to date the said defendant was employed in said radio section in the successive capacities of laboratory assistant and associate physicist. It was one of the duties of said defendant to carry on investigation, research and experimentation in such problems relating to radio and wireless as might be assigned to him by his superiors, and to report the results thereof to his said superiors, and to assist, advise and cooperate with other employees of said radio section in carrying on tasks assigned to them.

VI. Between February 4, 1913, and July 15, 1922, one Percival D. Lowell, was employed in said radio section in a capacity similar to that of the defendant, his duties being the same as those of the defendant. In the course of his employment as aforesaid, there was assigned to said Lowell by his superiors in said radio section, for investigation and research, the problem of developing an amplifier otherwise known as a "loud speaker" capable of operation by alternating electric current as supplied by electric power companies for residences and other buildings, so that the use of electric batteries might be eliminated in connection with radio receiving apparatus.

VII. As the plaintiff is informed and believes, the said Lowell pursuant to the aforesaid directions and instructions given him by his superiors, proceeded to carry on studies, research, investigation and experimentation in said problem, and the defendant Dunmore assisted, advised and cooperated with the said Lowell in carrying on said work. The aforesaid work was done by the said Lowell and the defendant Dunmore at said radio laboratory of the Bureau of Standards, with apparatus and materials which were the property of the plaintiff and during their usual hours of employment. The aforesaid work was done by said Low-

ell and the defendant Dunmore as one of the duties of their employment as aforesaid, and the results and product of said work are the property of the plaintiff.

[fol. 78] VIII. Some time prior to March 21, 1922, the defendant Lowell and the said Dunmore, solved the problem assigned to them by their superiors as aforesaid and completed the said work hereinabove referred to by developing and inventing an amplifier or "loud speaker" capable of being satisfactorily operated by alternating current received from the standard residence lighting power. The aforesaid development and invention, and all rights and interests therein are the property of the United States.

IX. As the plaintiff is informed and believes, the defendant Percival D. Lowell and the said Francis W. Dunmore, in disregard of their duties to the plaintiff, and ignoring the rights of the plaintiff, and without the knowledge or approval of the plaintiff, filed in the United States Patent Office on March 21, 1922, application for letters patent on said invention. Thereafter on November 9, 1926, letters patent of the United States numbered 1,606,212 and covering the said invention was issued to said Percival D. Lowell and Francis W. Dunmore on the basis of the said application.

X. The aforesaid letters patent is in equity and good conscience, the property of the United States. Although the plaintiff demanded of the defendant Dunmore and the said Lowell that the aforesaid letters patent be conveyed to the plaintiff, the said defendant Dunmore and the said Lowell have failed, neglected and refused to comply with said demand.

XI. As the plaintiff is informed and believes, the said defendant Dunmore and the said Lowell have unlawfully and illegally and in disregard to the plaintiff's rights purported to grant an exclusive license under the said letters patent to Dubilier Condenser Corporation, a corporation organized and existing under the laws of the State of Delaware.

XII. As the plaintiff is informed and believes, the said defendant Dunmore and the said Lowell have at various times collected and received various sums of money from divers persons as royalties or license fees in connection

[fol. 79] with and arising out of said letters patent, which said moneys in equity and good conscience belong to the plaintiff, and the said defendant and the said Lowell hold the same in trust and for the benefit of the plaintiff.

XIII. The said Percival D. Lowell and Dubilier Condenser Corporation are not made parties to this action because they are not within the jurisdiction of this Court, in that as the plaintiff is informed and believes, that said Lowell is an inhabitant of the Eastern District of New York and the said Dubilier Condenser Corporation is an inhabitant of the District of Delaware.

XIV. The plaintiff has no remedy at law.

Wherefore, the plaintiff prays this Honorable Court as follows:

1. That it be adjudged and decreed that the plaintiff is the owner of the invention hereinabove referred to and the defendant holds his interests therein as trustee and for the benefit of the plaintiff.

2. That it be adjudged and decreed that the plaintiff is the owner of letters patent of the United States numbered 1,606,212 and issued on November 9, 1926, and that the defendant holds his interest therein as trustee and for the benefit of the plaintiff.

3. That the defendant be directed and compelled to assign, transfer, and convey to the plaintiff all his right, title and interest in and to the aforesaid invention and the aforesaid letters patent.

4. That the defendant be compelled and directed to account and pay over to the plaintiff all moneys received by him in connection with or arising out of the said invention and the said letters patent.

5. That the plaintiff have such other and further relief as to the court may seem just, together with the costs of this action.

[fol. 80] 6. That this Honorable Court issue its writ of subpœna in due form of law and according to the course and practice of this court directed to the said defendant Francis W. Dunmore, commanding him at a certain date

and under a certain penalty to be therein specified, to appear before this Honorable Court to answer all and singular the matters hereinbefore set forth and complained of and to stand by and abide and perform all of the orders and decrees of the court herein.

Charles B. Rugg, Assistant Attorney General. Alexander Holtzoff, Special Assistant to the Attorney General, of Counsel. Leo A. Rover, United States Attorney for the District of Columbia.

[fol. 81] IN THE SUPREME COURT OF THE DISTRICT OF COLUMBIA

In Equity

No. 51323

UNITED STATES OF AMERICA, Plaintiff,

v.

FRANCIS W. DUNMORE, Defendant

ANSWER

Now comes the defendant above named and answers plaintiff's bill of complaint as follows:

1. Defendant admits the allegations contained in paragraph I of the bill of complaint.

II. Defendant admits the allegations contained in paragraph II of the bill of complaint.

III. On information and belief defendant denies the allegations contained in paragraph III of the bill of complaint.

IV. Answering paragraph IV of the bill of complaint defendant says that he has no knowledge sufficient to form a belief of the matters therein alleged, and therefore neither admits nor denies the same but leaves the plaintiff to make such proof thereof as it may be advised if the allegations in said paragraph are deemed material.

V. As to the allegations contained in paragraph V, defendant admits the allegations contained in the first two sentences thereof but denies the allegations contained in the last sentence thereof.

VI. The defendant denies each and every of the allegations of numbered paragraph VI of the plaintiff's bill of complaint.

VII. The defendant denies each and every of the allegations of numbered paragraph VII of the plaintiff's bill of complaint.

[fol. 82] VIII. The defendant denies each and every of the allegations of numbered paragraph VIII of the plaintiff's bill of complaint.

IX. As to matters alleged in paragraph IX of the bill of complaint, defendant admits that on March 21, 1922 he jointly filed with Percival D. Lowell an application for Letters Patent of the United States which issued as Number 1,606,212 on November 9, 1926. As to all other allegations in said paragraph IX defendant denies the same.

X. Defendant denies each and every of the allegations contained in paragraph X of the bill of complaint and alleges that no officer or agency of the United States Government was or is authorized to acquire the invention of said Letters Patent 1,606,212 on behalf of the United States Government.

XI. Defendant admits that he granted a license with the said Lowell to Dubilier Condenser Corporation but defendant denies each and every other allegation of paragraph XI of plaintiff's bill of complaint.

XII. Answering paragraph XII of plaintiff's bill of complaint, defendant admits that he has at various times collected and received various sums of money from divers persons as royalties or license fees in connection with and arising out of Letters Patent 1,606,212, but defendant denies that any of the said money belongs to plaintiff and denies that he holds the said money or any other property for the benefit of the plaintiff, and further answering, defendant avers that plaintiff has acquiesced in the collection and disbursement of said moneys and is not entitled to recover the same.

XIII. Answering paragraph XIII of plaintiff's bill of complaint, defendant avers that he has no knowledge sufficient to form a belief and therefore neither affirms or denies the same and leaves the plaintiff to proof thereof if the allegations in said paragraph XIII are deemed material.

XIV. Answering paragraph XIV of plaintiff's bill of complaint, defendant denies the allegation contained therein.

[fol. 83] Wherefore, having duly answered the bill of complaint, this defendant denies that the plaintiff is entitled to the relief demanded or to any part of the same and prays that the bill of complaint be dismissed with costs.

Francis W. Dunmore, John B. Brady, Solicitor for Defendant.

CITY OF WASHINGTON,
District of Columbia, ss:

Francis W. Dunmore, being duly sworn, deposes and says that he is the defendant in this suit; that he has read the foregoing answer to the bill of complaint in this suit and knows the contents thereof and that the same is true to his own knowledge except as to the matters therein stated to be alleged upon information and belief and that as to those matters he believes it to be true.

Francis W. Dunmore.

Sworn to and subscribed before me this 21st day of May, 1930.

James E. Brown, Notary Public, D. C. (Seal.)

My commission expires March 31st, 1931.

[fol. 84] IN THE SUPREME COURT OF THE DISTRICT OF COLUMBIA

In Equity

No. 51,324

UNITED STATES OF AMERICA, Plaintiff,

v.

FRANCIS W. DUNMORE, 3411 Rodman St. N. W., Defendant

BILL OF COMPLAINT

To the Supreme Court of the District of Columbia:

Plaintiffs state as follows:

I. This is a suit in equity brought by the United States of America as plaintiff.

II. As the plaintiff is informed and believes, the defendant Francis W. Dunmore is a citizen of the United States and a resident of the District of Columbia.

III. At all times hereinafter mentioned, the Bureau of Standards was and now is a subdivision of the Department of Commerce. The functions of said Bureau of Standards comprise the custody of standards; the comparison of the standards used with the standards adopted or recognized by the Government; the construction, the testing and the calibration of standards; and the conduct of scientific investigation, experimentation, studies and research in general.

IV. At all times hereinafter mentioned the Bureau of Standards maintained and now maintains a radio section. The said radio section carries on calibration of various [fol. 85] radio instruments, and conducts scientific investigation, experiments, studies and research in the radio field, and prepares and publishes scientific papers containing the results of its work for the purpose of disseminating knowledge to the parties interested therein and to the public generally. For the purpose of carrying on its work the said radio section maintains a radio laboratory.

V. As the plaintiff is informed and believes, the defendant Francis W. Dunmore, is a physicist and is trained in carrying on research and experimentation in various branches of physics and the science of electricity, including radio. From January 14, 1918, to date the said defendant was employed in said radio section in the successive capacities of laboratory assistant and associate physicist. It was one of the duties of said defendant to carry on investigation, research and experimentation in such problems relating to radio and wireless as might be assigned to him by his superiors, and to report the results thereof to his said superiors, and to assist, advise and cooperate with other employees of said radio section in carrying on tasks assigned to them.

VI. In the course of his employment as aforesaid there was assigned to said defendant, Dunmore, by his superiors in said radio section for investigation and research, the problem of developing a relay in connection with radio receiving apparatus for the local or remote control of auxiliary apparatus.

VII. As the plaintiff is informed and believes, the said Dunmore pursuant to the aforesaid directions and instructions given him by his superiors, proceeded to carry on studies, research, investigations and experimentation in said problem, and the defendant Lowell assisted, advised and cooperated with the said Dunmore in carrying on said work. The aforesaid work was done by the said Dunmore at said radio laboratory of the Bureau of Standards, with apparatus and materials which were the property of the plaintiff and during his usual hours of employment. The aforesaid work was done by said Dunmore as one of the [fol. 86] duties of his employment as aforesaid, and the results and product of said work are the property of the plaintiff.

VIII. Some time prior to February 27, 1922, the defendant Dunmore solved the aforesaid problem and completed the said work hereinbefore referred to by developing an apparatus commonly known as a "radio relay". The aforesaid development and invention and all rights and interests therein are the property of the United States.

IX. As the plaintiff is informed and believes, the defendant Dunmore, in disregard of his duties to the plaintiff, and ignoring the rights of the plaintiff, and without the knowledge or approval of the plaintiff, filed in the United States Patent Office on February 27, 1922, an application for letters patent on said invention. Thereafter on July 5, 1927, letters patent of the United States numbered 1,635,117, and covering the said invention were issued to said Francis W. Dunmore on the basis of the said application.

X. The aforesaid letters patent are in equity and good conscience, the property of the United States. Although the plaintiff demanded of the defendant Dunmore that the aforesaid letters patent be conveyed to the plaintiff, the said defendant Dunmore has failed, neglected and refused to comply with said demand.

XI. As the plaintiff is informed and believes, the said defendant Dunmore has granted an exclusive license on the said letters patent to the Dubilier Condenser Corporation, a corporation organized and existing under the laws of the State of Delaware, in so far as they relate to radio broadcasting apparatus, and to Morkrum Company, a corporation organized and existing under the laws of the State of Maine, in so far as said letters patent relate to printing telegraph apparatus.

XII. As the plaintiff is informed and believes, the said defendant Dunmore has at various times collected and received various sums of money from divers persons as royalties or license fees in connection with and arising out of said letters patent, which said moneys in equity and good [fol. 87] conscience belong to the plaintiff, and the said defendant holds the same in trust and for the benefit of the plaintiff.

XIII. The said Dubilier Condenser Corporation and the said Morkrum Company are not made parties to this action because they are not within the jurisdiction of this court, in that the said Dubilier Condenser Corporation is an inhabitant of the District of Delaware and the said Morkrum Company is an inhabitant of the District of Maine.

XIV. The plaintiff has no remedy at law.

Wherefore, the plaintiff prays this Honorable Court as follows:

1. That it be adjudged and decreed that the plaintiff is the owner of the invention hereinabove referred to and the defendant holds his interest therein as trustee and for the benefit of the plaintiff.

2. That it be adjudged and decreed that the plaintiff is the owner of letters patent of the United States numbered 1,635,117 and issued on July 5, 1927, and that the defendant holds his interest therein as trustee and for the benefit of the plaintiff.

3. That the defendant be directed and compelled to assign, transfer, and convey to the plaintiff all his right, title and interest in and to the aforesaid invention and the aforesaid letters patent.

4. That the defendant be compelled and directed to account and pay over to the plaintiff all moneys received by him in connection with or arising out of the said invention and the said letters patent.

5. That the plaintiff have such other and further relief, as to the court may seem just, together with the costs of this action.

6. That this Honorable Court issue its writ of subpœna in due form of law and according to the course and practice of this court directed to the said defendant Francis W. Dunmore, commanding him at a certain date and under a [fol. 88] certain penalty to be therein specified, to appear before this Honorable Court to answer all and singular the matters hereinbefore set forth and complained of and to stand by and abide and perform all of the orders and decrees of the court herein.

Charles B. Rugg, Assistant Attorney General, Alexander Holtzoff, Special Assistant to the Attorney General, of Counsel. Leo A. Rover, United States Attorney for the District of Columbia.

[fol. 89] IN THE SUPREME COURT OF THE DISTRICT OF COLUMBIA

In Equity

No. 51324

UNITED STATES OF AMERICA, Plaintiff,

v.

FRANCIS W. DUNMORE, Defendant

ANSWER

Now comes the defendant above named and answers plaintiff's bill of complaint as follows:

I. Defendant admits the allegation contained in paragraph I of the bill of complaint.

II. Defendant admits the allegations contained in paragraph II of the bill of complaint.

III. On information and belief defendant denies the allegations contained in paragraph III of the bill of complaint.

IV. Answering paragraph IV of the bill of complaint defendant says that he has no knowledge sufficient to form a belief of the matters therein alleged, and therefore neither admits nor denies the same but leaves the plaintiff to make such proof thereof as it may be advised if the allegations in said paragraph are deemed material.

V. As to the allegations contained in paragraph V, defendant admits the allegations contained in the first two sentences thereof but denies the allegations contained in the last sentence thereof.

VI. The defendant denies each and every of the allegations of numbered paragraph VI of the plaintiff's bill of complaint.

VII. The defendant denies each and every of the allegations of numbered paragraph VII of the plaintiff's bill of complaint.

[fol. 90] VIII. The defendant denies each and every of the allegations of numbered paragraph VIII of the plaintiff's bill of complaint.

IX. As to matters alleged in paragraph IX of the bill of complaint defendant admits that on February 27, 1922 he filed application for Letters Patent and secured thereon under date of July 5, 1927 Letters Patent of the United States numbered 1,635,117. As to all other allegations of said paragraph, defendant denies the same.

X. Defendant denies each and every of the allegations contained in paragraph X of the bill of complaint and alleges that no officer or agency of the United States Government was or is authorized to acquire the invention of the said Letters Patent 1,635,117 on behalf of the United States Government.

XI. The defendant admits that he has granted a license to the Dubilier Condenser Corporation and the Morkrum Company under Letters Patent 1,635,117, but denies each and every of the other allegations of paragraph XI.

XII. Answering paragraph XII of plaintiff's bill of complaint, defendant admits that he has at various times collected and received various sums of money from divers persons as royalties or license fees in connection with and arising out of Letters Patent 1,635,117, but defendant denies that any of the said money belongs to plaintiff and denies that he holds the said money or any other property for the benefit of the plaintiff, and further answering defendant avers that plaintiff has acquiesced in the collection and disbursement of said moneys and is not entitled to recover the same.

XIII. Answering paragraph XIII of palintiff's bill of complaint, defendant avers that he has no knowledge sufficient to form a belief and therefore neither affirms nor denies the same and leaves the plaintiff to proof thereof if the allegations in said paragraph are deemed material.

XIV. Answering paragraph XIV of the plaintiff's bill of complaint, defendant denies the allegation contained therein.

[fol. 91] Wherefore, having duly answered the bill of complaint, this defendant denies that the plaintiff is entitled

to the relief demanded or any part of the same and prays that the bill of complaint be dismissed with costs.

Francis W. Dunmore, John B. Brady, Solicitor for Defendant.

City of Washington,
District of Columbia, ss:

Francis W. Dunmore, being duly sworn, deposes and says that he is the defendant in this suit; that he has read the foregoing answer to the bill of complaint in this suit and knows the contents thereof and that the same is true to his own knowledge except as to the matters therein stated to be alleged upon information and belief and that as to those matters he believes it to be true.

Francis W. Dunmore.

Sworn to and subscribed before me this 21st day of May, 1930.

James E. Brown, Notary Public, D. C. (Seal.)

My commission expires March 31st, 1931.

[fol. 92] In the District Court of the United States for the District of Delaware

In Equity

No. 788

United States of America, Plaintiff,

v.

Dubilier Condenser Corporation, Defendant

Bill of Complaint

To the Honorable Judge of the District Court of the United States for the District of Delaware:

The United States of America brings this its bill of complaint against Dubilier Condenser Corporation, and for cause of action alleges:

I. This is a suit in equity brought by the United States of America as plaintiff.

II. As the plaintiff is informed and believes, the defendant Dubilier Condenser Corporation is a corporation organized under the laws of the State of Delaware and an inhabitant of the District of Delaware.

III. At all times hereinafter mentioned, the Bureau of Standards was and now is a subdivision of the Department of Commerce. The functions of said Bureau of Standards comprise the custody of standards; the comparison of the standards used with the standards adopted or recognized by the Government; the construction, the testing and the calibration of standards; and the conduct of scientific investigation, experimentation, studies and research in general.

IV. At all times hereinafter mentioned the Bureau of Standards maintained and now maintains a radio section. The said radio section carries on calibration of various radio instruments, and conducts scientific investigation, ex- [fol. 93] periments, studies and research in the radio field, and prepares and publishes scientific papers containing the results of its work for the purpose of disseminating knowledge to the parties interested therein and to the public generally. For the purpose of carrying on its work the said radio section maintains a radio laboratory.

V. As the plaintiff is informed and believes, one, Percival D. Lowell and, one, Francis W. Dunmore are physicists and are trained in carrying on research and experimentation in various branches of physics and the science of electricity, including radio. Between February 4, 1913, and July 15, 1922, the said Lowell was employed in said radio section in the successive capacities of laboratory apprentice and associate physicist. From January 14, 1918, to date, the said Dunmore was employed in said radio section in the successive capacities of laboratory assistant and associate physicist. It was one of the duties of said Lowell and of said Dunmore to carry on investigation, research and experimentation in such problems relating to radio and wireless as might be assigned to them by their superiors, and to report the results thereof to their said superiors, and to assist, advise and cooperate with other employees of said radio section in the performance of tasks assigned to them.

VI. In the course of his employment as aforesaid, there was assigned to the said Lowell by his superiors in said radio section, for investigation and research, the problem of developing a radio receiving set capable of operation by alternating electric current as supplied by electric power companies for residences and other buildings, so that the use of electric batteries might be eliminated in connection with radio receiving apparatus.

VII. As the plaintiff is informed and believes the said Lowell pursuant to the aforesaid directions and instructions given him by his superiors, proceeded to carry on studies, research, investigation and experimentation in said problems, and the said Dunmore advised, assisted and co-operated with said Lowell in the performance of the aforesaid work. The aforesaid work was done by said Lowell and [fol. 94] said Dunmore at said radio laboratory of the Bureau of Standards with apparatus and materials which were the property of the plaintiff; and during their usual hours of employment. The aforesaid work was done by said Lowell and said Dunmore as one of the duties of their employment as aforesaid, and the results and product of said work are the property of the plaintiff.

VIII. Some time prior to March 27, 1922, the said Lowell and the said Dunmore, solved the problem assigned to them by their superiors as aforesaid and completed the said work hereinabove referred to by developing and inventing a radio receiving apparatus capable of being satisfactorily operated by alternating current received from the standard residence lighting power. The aforesaid development and invention and all rights and interests therein are the property of the United States.

IX. As the plaintiff is informed and believes, the said Percival D. Lowell and the said Francis W. Dunmore, in disregard of their duties to the plaintiff, and ignoring the rights of the plaintiff, and without the knowledge or approval of the plaintiff, filed in the United States Patent Office on March 27, 1922, an application for letters patent on said invention. Thereafter on May 15, 1923, letters patent of the United States numbered 1,455,141 and covering the said invention were issued to the said Percival D. Lowell and Francis W. Dunmore on the basis of the said application.

X. The aforesaid letters patent are in equity and good conscience, the property of the United States. Although the plaintiff demanded that the aforesaid letters patent be conveyed to the plaintiff, such demand has not been complied with.

XI. As the plaintiff is informed and believes the said Lowell and the said Dunmore have unlawfully and illegally and in disregard of the plaintiff's rights purported to grant an exclusive license under the said letters patent to the defendant Dubilier Condenser Corporation.

[fol. 95] XII. As the plaintiff is informed and believes the defendant has at various times collected and received various sums of money from divers persons as royalties or license fees in connection with and arising out of said letters patent, which said moneys in equity and good conscience belong to the plaintiff and the said defendant holds the same in trust and for the benefit of the plaintiff.

XIII. The said Percival D. Lowell and Francis W. Dunmore are not made parties to this action because they are not within the jurisdiction of this Court, in that, as the plaintiff is informed and believes, the said Lowell is an inhabitant of the Eastern District of New York and the said Dunmore is an inhabitant of the District of Columbia.

XIV. The plaintiff has no remedy at law.

Wherefore, the plaintiff prays this Honorable Court as follows:

1. That it be adjudged and decreed that the plaintiff is the owner of the invention hereinabove referred to and the defendant holds its interest therein as trustee and for the benefit of the plaintiff.

2. That it be adjudged and decreed that the plaintiff is the owner of letters patent of the United States numbered 1,455,141 and issued on May 15, 1923, and that the defendant holds its interest therein as trustee and for the benefit of the plaintiff.

3. That the defendant be directed and compelled to assign, transfer and convey to the plaintiff all its right, title and interest in and to the aforesaid invention and the aforesaid letters patent.

4. That the defendant be compelled and directed to account and pay over to the plaintiff all moneys received by it in connection with or arising out of the said invention and the said letters patent.

5. That the plaintiff have such other and further relief as to the court may seem just, together with the costs of this action.

[fol. 96] 6. That this Honorable Court issue its writ of subpœna in due form of law and according to the course and practice of this court directed to the said defendant Dubilier Condenser Corporation, commanding it at a certain date and under a certain penalty to be therein specified, to appear before this Honorable Court to answer all and singular the matters hereinbefore set forth and complained of and to stand by and abide and perform all of the orders and decrees of the court herein.

Charles B. Rugg, Assistant Attorney General. Alexander Holtzoff, Special Assistant to the Attorney General, of Counsel. Leonard E. Wales, United States Attorney for the District of Delaware,

[fol. 97] IN THE DISTRICT COURT OF THE UNITED STATES FOR THE DISTRICT OF DELAWARE

In Equity

No. 788

UNITED STATES OF AMERICA, Plaintiff,

v.

DUBILIER CONDENSER CORPORATION, Defendant

ANSWER

Now comes the defendant above named and answers plaintiff's bill of complaint as follows:

I. Defendant admits the allegations contained in paragraph I of the bill of complaint.

II. Defendant admits the allegations contained in paragraph II of the bill of complaint.

III. Defendant denies each and every of the allegations contained in paragraph III of the bill of complaint.

IV. Answering paragraph IV of the bill of complaint defendant says that it has no knowledge sufficient to form a belief of the matters therein alleged, and therefore neither admits nor denies the same but leaves the plaintiff to make such proof thereof as it may be advised if the allegations in said paragraph are deemed material.

V. Answering paragraph V of the bill of complaint, defendant says that it has no knowledge sufficient to form a belief of the matters therein alleged, and therefore neither admits nor denies the same but leaves the plaintiff to make such proof thereof as it may be advised if the allegations in said paragraph are deemed material.

VI. Answering paragraph VI of the bill of complaint, defendant says that it has no knowledge sufficient to form a belief of the matters therein alleged, and therefore neither [fol. 98] admits nor denies the same but leaves the plaintiff to make such proof thereof as it may be advised if the allegations in said paragraph are deemed material.

VII. Answering paragraph VII of the bill of complaint, defendant says that it has no knowledge sufficient to form a belief of the matters alleged in the first two sentences therein, and therefore neither admits nor denies the same but leaves the plaintiff to make such proof thereof as it may be advised if the allegations in said two sentences are deemed material. The defendant denies each and every of the other allegations contained in said paragraph numbered VII.

VIII. Answering paragraph VIII of the bill of complaint, defendant says that it has no knowledge sufficient to form a belief of the matters alleged in the first sentence therein, and therefore neither admits nor denies the same but leaves the plaintiff to make such proof thereof as it may be advised if the allegations in said sentence are deemed material. The defendant denies each and every of the other allegations contained in said paragraph numbered VIII.

IX. As to the matters alleged in paragraph IX of the bill of complaint, defendant admits that on March 27, 1922

one Percival D. Lowell and Francis W. Dunmore filed application for United States Letters Patent and secured thereon on May 15, 1923 Letters Patent of the United States numbered 1,455,141. As to all other matters in paragraph IX the defendant says that it has no knowledge sufficient to form a belief of the matters therein alleged, and therefore neither admits nor denies the same but leaves the plaintiff to make such proof thereof as it may be advised if the allegations in said paragraph are deemed material.

X. Defendant denies each and every of the allegations contained in paragraph X of the bill of complaint, and defendant further alleges that no officer or agency of the United States Government was or is authorized to acquire the invention of the Letters Patent 1,455,141 on behalf of the Government.

[fol. 99] XI. Answering paragraph XI of the bill of complaint, defendant admits that a license was granted to it under Letters Patent 1,455,141, and defendant denies each and every of the other allegations contained in said paragraph XI.

XII. Answering paragraph XII of the bill of complaint, defendant admits that it has at various times collected and received various sums of money from divers persons as royalties or license fees in connection with and arising out of Letters Patent numbered 1,455,141, but defendant denies that any of the said money belongs to plaintiff and denies that it holds the said money or any other property for the benefit of the plaintiff.

XIII. Answering paragraph XIII of the bill of complaint, defendant says that it has no knowledge sufficient to form a belief of the matters therein alleged, and therefore neither admits nor denies the same but leaves the plaintiff to make such proof thereof as it may be advised if the allegations in said paragraph are deemed material.

XIV. Answering paragraph XIV of the plaintiff's bill of complaint, defendant denies the allegations contained therein.

Wherefore, having duly answered the bill of complaint, this defendant denies that the plaintiff is entitled to the

relief demanded or to any part of the same and prays that the bill of complaint be dismissed with costs.

Dubilier Condenser Corporation, by Roy E. Sweney, Secretary-Treasurer. James H. Hughes, Jr., Solicitor for Defendant. Edwards, Bower and Pool, of Counsel for Defendant.

[fol. 100] State of New York,
County of Bronx, ss:

Roy E. Sweney, being duly sworn, deposes and says that he is Secretary-Treasurer of the Dubilier Condenser Corporation, the defendant in this suit, that he has read the foregoing answer to the bill of complaint in this suit and knows the contents thereof and that the same is true of his own knowledge except as to the matters therein stated to be alleged upon information and belief, and as to those matters he believes it to be true.

Roy E. Sweney.

Sworn to and subscribed before me this 20th day of May, 1930.

R. I. MacGeorge, Notary Public. (Notarial Seal.)
Notary Public, N. Y. Co. 573.
N. Y. Co. Reg. No. 1-M-734.
Bronx Co. Reg. No. 3122-B.
Bronx Co. Clerk No. 76.
Commission expires March 30, 1931.

[fol. 101] In the District Court of the United States for the District of Delaware

In Equity

No. 789

United States of America, Plaintiff,

v.

Dubilier Condenser Corporation, Defendant

Bill of Complaint

To the Honorable Judge of the District Court of the United States for the District of Delaware:

The United States of America brings this its bill of complaint against Dubilier Condenser Corporation, and for cause of action alleges:

I. This is a suit in equity brought by the United States of America as plaintiff.

II. As the plaintiff is informed and believes, the defendant Dubilier Condenser Corporation is a corporation organized under the laws of the State of Delaware and an inhabitant of the District of Delaware.

III. At all times hereinafter mentioned, the Bureau of Standards was and now is a subdivision of the Department of Commerce. The functions of said Bureau of Standards comprise the custody of standards; the comparison of the standards used with the standards adopted or recognized by the Government; the construction, the testing and the calibration of standards; and the conduct of scientific investigation, experimentation, studies and research in general.

IV. At all times hereinafter mentioned the Bureau of Standards maintained and now maintains a radio section. The said radio section carries on calibration of various [fol. 102] radio instruments, and conducts scientific investigation, experiments, studies and research in the radio field, and prepares and publishes scientific papers containing the results of its work for the purpose of disseminating knowledge to the parties interested therein and to the public generally. For the purposes of carrying on its work the said radio section maintains a radio laboratory.

V. As the plaintiff is informed and believes, one, Percival D. Lowell and, one, Francis W. Dunmore are physicists and are trained in carrying on research and experimentation in various branches of physics and the science of electricity, including radio. Between February 4, 1913, and July 15, 1922, the said Lowell was employed in said radio section in the successive capacities of laboratory apprentice and associate physicist. From January 14, 1918, to date, the said Dunmore was employed in said radio section in the successive capacities of laboratory assistant and associate physicist. It was one of the duties of said Lowell and of said Dunmore to carry on investigation, research and experimentation in such problems relating to radio and wireless as might be assigned to them by their superiors, and to report the results thereof to their said superiors, and to assist, advise and cooperate with other employees

of said radio section in the performance of tasks assigned to them.

VI. In the course of his employment as aforesaid, there was assigned to said Lowell by his superiors in said radio section, for investigation and research, the problem of developing an amplifier, otherwise known as a "loud speaker", capable of operation by alternating electric current as supplied by electric power companies for residences and other buildings.

VII. As the plaintiff is informed and believes the said Lowell pursuant to the aforesaid directions and instructions given him by his superiors, proceeded to carry on studies, research, investigation and experimentation in said problems, and the said Dunmore advised, assisted and cooperated with said Lowell in the performance of the aforesaid work. The aforesaid work was done by said Lowell [fol. 103] and said Dunmore at said radio laboratory of the Bureau of Standards with apparatus and materials which were the property of the plaintiff; and during their usual hours of employment. The aforesaid work was done by said Lowell and said Dunmore as one of the duties of their employment as aforesaid, and the results and product of said work are the property of the plaintiff.

VIII. Sometime prior to March 21, 1922, the said Lowell and the said Dunmore solved the problem assigned to them by their superiors as aforesaid and completed the said work hereinabove referred to by developing and inventing an amplifier or "loud speaker", capable of being satisfactorily operated by alternating current received from the standard residence lighting power. The aforesaid development and invention and all rights and interests therein are the property of the United States.

IX. As the plaintiff is informed and believes, the said Percival D. Lowell and the said Francis W. Dunmore, in disregard of their duties to the plaintiff, and ignoring the rights of the plaintiff, and without the knowledge or approval of the plaintiff, filed in the United States Patent Office on March 21, 1922, an application for letters patent on said invention. Thereafter on November 9, 1926, letters patent of the United States numbered 1,606,212 and covering the said invention were issued to the said Percival D.

Lowell and Francis W. Dunmore on the basis of the said application.

X. The aforesaid letters patent are in equity and good conscience, the property of the United States. Although the plaintiff demanded that the aforesaid letters patent be conveyed to the plaintiff, such demand has not been complied with.

XI. As the plaintiff is informed and believes the said Lowell and the said Dunmore have unlawfully and illegally and in disregard of the plaintiff's rights purported to grant an exclusive license under the said letters patent to the defendant Dubilier Condenser Corporation.

[fol. 104] XII. As the plaintiff is informed and believes the defendant has at various times collected and received various sums of money from divers persons as royalties or license fees in connection with and arising out of said letters patent, which said moneys in equity and good conscience belong to the plaintiff and the said defendant holds the same in trust and for the benefit of the plaintiff.

XIII. The said Percival D. Lowell and Francis W. Dunmore are not made parties to this action because they are not within the jurisdiction of this Court, in that, as the plaintiff is informed and believes, the said Lowell is an inhabitant of the Eastern District of New York and the said Dunmore is an inhabitant of the District of Columbia.

XIV. The plaintiff has no remedy at law.

Wherefore, the plaintiff prays this Honorable Court as follows:

1. That it be adjudged and decreed that the plaintiff is the owner of the invention hereinabove referred to and the defendant holds its interest therein as trustee and for the benefit of the plaintiff.

2. That it be adjudged and decreed that the plaintiff is the owner of letters patent of the United States numbered 1,606,212 and issued on November 9, 1926, and that the defendant holds its interest therein as trustee and for the benefit of the plaintiff.

3. That the defendant be directed and compelled to assign, transfer and convey to the plaintiff all its right, title

and interest in and to the aforesaid invention and the aforesaid letters patent.

4. That the defendant be compelled and directed to account and pay over to the plaintiff all moneys received by it in connection with or arising out of the said invention and the said letters patent.

5. That the plaintiff have such other and further relief as to the court may seem just, together with the costs of this action.

[fol. 105] 6. That this Honorable Court issue its writ of subpoena in due form of law and according to the course and practice of this court directed to the said defendant Dubilier Condenser Corporation, commanding it at a certain date and under a certain penalty to be therein specified, to appear before this Honorable Court to answer all and singular the matters hereinbefore set forth and complained of and to stand by and abide and perform all of the orders and decrees of the court herein.

Charles B. Rugg, Assistant Attorney General. Alexander Holtzloff, Special Assistant to the Attorney General, of Counsel. Leonard E. Wales, United States Attorney for the District of Delaware.

[fol. 106] IN THE DISTRICT COURT OF THE UNITED STATES FOR THE DISTRICT OF DELAWARE

In Equity

No. 789

UNITED STATES OF AMERICA, Plaintiff,

v.

DUBILIER CONDENSER CORPORATION, Defendant

ANSWER

Now comes the defendant above named and answers plaintiff's bill of complaint as follows:

I. Defendant admits the allegations contained in paragraph I of the bill of complaint.

II. Defendant admits the allegations contained in paragraph II of the bill of complaint.

III. Defendant denies each and every of the allegations contained in paragraph III of the bill of complaint.

IV. Answering paragraph IV of the bill of complaint defendant says that it has no knowledge sufficient to form a belief of the matters therein alleged, and therefore neither admits nor denies the same but leaves the plaintiff to make such proof thereof as it may be advised if the allegations in said paragraph are deemed material.

V. Answering paragraph V of the bill of complaint, defendant says that it has no knowledge sufficient to form a belief of the matters therein alleged, and therefore neither admits nor denies the same but leaves the plaintiff to make such proof thereof as it may be advised if the allegations in said paragraph are deemed material.

VI. Answering paragraph VI of the bill of complaint, defendant says that it has no knowledge sufficient to form a belief of the matters therein alleged, and therefore neither [fol. 107] admits nor denies the same but leaves the plaintiff to make such proof thereof as it may be advised if the allegations in said paragraph are deemed material.

VII. Answering paragraph VII of the bill of complaint, defendant says that it has no knowledge sufficient to form a belief of the matters alleged in the first two sentences therein, and therefore neither admits nor denies the same but leaves the plaintiff to make such proof thereof as it may be advised if the allegations in said two sentences are deemed material. The defendant denies each and every of the other allegations contained in said paragraph numbered VII.

VIII. Answering paragraph VIII of the bill of complaint, defendant says that it has no knowledge sufficient to form a belief of the matters alleged in the first sentence therein, and therefore neither admits nor denies the same but leaves the plaintiff to make such proof thereof as it may be advised if the allegations in said sentence are deemed material. The defendant denies each and every of the other allegations contained in said paragraph numbered VIII.

IX. As to the matters alleged in paragraph IX of the bill of complaint, defendant admits that on March 21, 1922

one Percival D. Lowell and Francis W. Dunmore filed application for United States Letters Patent and secured thereon on November 9, 1926 Letters Patent of the United States numbered 1,606,212. As to all other matters in paragraph IX the defendant says that it has no knowledge sufficient to form a belief of the matters therein alleged, and therefore neither admits nor denies the same but leaves the plaintiff to make such proof thereof as it may be advised if the allegations in said paragraph are deemed material.

X. Defendant denies each and every of the allegations contained in paragraph X of the bill of complaint, and defendant further alleges that no officer or agency of the United States Government was or is authorized to acquire the invention of the Letters Patent 1,606,212 on behalf of the Government.

[fol. 108] XI. Answering paragraph XI of the bill of complaint, defendant admits that a license was granted to it under Letters Patent 1,606,212, and defendant denies each and every of the other allegations contained in said paragraph XI.

XII. Answering paragraph XII of the bill of complaint, defendant admits that it has at various times collected and received various sums of money from divers persons as royalties or license fees in connection with and arising out of Letters Patent numbered 1,606,212, but defendant denies that any of the said money belongs to plaintiff and denies that it holds the said money or any other property for the benefit of the plaintiff.

XIII. Answering paragraph XIII of the bill of complaint, defendant says that it has no knowledge sufficient to form a belief of the matters therein alleged, and therefore neither admits nor denies the same but leaves the plaintiff to make such proof thereof as it may be advised if the allegations in said paragraph are deemed material.

XIV. Answering paragraph XIV of the plaintiff's bill of complaint, defendant denies the allegations contained therein.

Wherefore, having duly answered the bill of complaint, this defendant denies that the plaintiff is entitled to the re-

lief demanded or to any part of the same and prays that the bill of complaint be dismissed with costs.

Dubilier Condenser Corporation, by Roy E. Sweney, Secretary-Treasurer. James H. Hughes, Jr., Solicitor for Defendant. Edwards, Bower and Pool, of Counsel for Defendant.

[fol. 109] State of New York,
County of Bronx, ss:

Roy E. Sweney, being duly sworn, deposes and says that he is Secretary-Treasurer of the Dubilier Condenser Corporation, the defendant in this suit, that he has read the foregoing answer to the bill of complaint in this suit and knows the contents thereof, and that the same is true of his own knowledge except as to the matters therein stated to be alleged upon information and belief, and as to those matters he believes it to be true.

Roy E. Sweney,

Subscribed and sworn to before me this 20th day of May, 1930.

R. I. MacGeorge, Notary Public. (Notarial Seal.)
Notary Public N. Y. Co. No. 573.
N. Y. Co. Reg. No. 1-M-734.
Bronx Co. Clerk No. 76.
Bronx Co. Reg. No. 3122-B.
Commission expires March 30, 1931.

[fol. 110] In the District Court of the United States for the District of Delaware

In Equity

No. 790

United States of America, Plaintiff,

v.

Dubilier Condenser Corporation, Defendant

Bill of Complaint

To the Honorable Judge of the District Court of the United States for the District of Delaware:

The United States of America brings this its bill of complaint against Dubilier Condenser Corporation, and for cause of action alleges:

I. This is a suit in equity brought by the United States of America as plaintiff.

II. As the plaintiff is informed and believes, the defendant Dubilier Condenser Corporation is a corporation organized under the laws of the State of Delaware and an inhabitant of the District of Delaware.

III. At all times hereinafter mentioned, the Bureau of Standards was and now is a subdivision of the Department of Commerce. The functions of said Bureau of Standards comprise the custody of standards; the comparison of the standards used with the standards adopted or recognized by the Government; the construction, the testing and the calibration of standards; and the conduct of scientific investigation, experimentation, studies and research in general.

[fol. 111] IV. At all times hereinafter mentioned the Bureau of Standards maintained and now maintains a radio section. The said radio section carries on calibration of various radio instruments, and conducts scientific investigation, experiments, studies and research in the radio field, and prepares and publishes scientific papers containing the results of its work for the purpose of disseminating knowledge to the parties interested therein and to the public generally. For the purpose of carrying on its work the said radio section maintains a radio laboratory.

V. As the plaintiff is informed and believes, one Francis W. Dunmore is a physicist and is trained in carrying on research and experimentation in various branches of physics and the science of electricity, including radio. From January 14, 1918, to date, the said Dunmore was employed in said radio section in the successive capacities of laboratory assistant and associate physicist. It was one of the duties of said Dunmore to carry on investigation, research and experimentation in such problems relating to radio and wireless as might be assigned to him by his superiors and to report the results thereof to his said superiors.

VI. In the course of his employment as aforesaid, there was assigned to said Dunmore by his superiors in said radio section, for investigation and research, the problem

of developing a radio receiving system operating a relay for the local or remote control of auxiliary apparatus.

VII. As the plaintiff is informed and believes, the said Dunmore pursuant to the aforesaid directions and instructions given him by his superiors proceeded to carry on studies, research, investigation and experimentation in said problem. The aforesaid work was done by said Dunmore at said radio laboratory of the Bureau of Standards with apparatus and materials which were the property of the plaintiff, and during his usual hours of employment. The aforesaid work was done by said Dunmore as one of the duties of his employment as aforesaid, and the results and product of said work is the property of the plaintiff.

[fol. 112] VIII. Sometime prior to the 27th day of February, 1922, the said Dunmore solved the problem assigned to him by his superiors as aforesaid and completed the said work hereinabove referred to by developing and inventing an apparatus known as a "radio relay". The aforesaid development and invention and all rights and interests therein are the property of the United States.

IX. As the plaintiff is informed and believes, the said Dunmore in disregard of his duties to the plaintiff and ignoring the rights of the plaintiff, and without the knowledge or approval of the plaintiff, filed in the United States Patent Office on February 27, 1922, an application for letters patent on said invention. Thereafter on July 5, 1927, letters patent of the United States numbered 1,635,117, and covering the said invention were issued to said Francis W. Dunmore on the basis of the said application.

X. The aforesaid letters patent are in equity and good conscience, the property of the United States. Although the plaintiff demanded that the aforesaid letters patent be conveyed to the plaintiff, such demand has not been complied with.

XI. As the plaintiff is informed and believes the said Dunmore has unlawfully and illegally and in disregard of the plaintiff's rights purported to grant an exclusive license under the said letters patent to the defendant Dubilier Condenser Corporation, in so far as the said letters patent cover radio telephone broadcast receiving apparatus; and to Morkrum Company, a corporation organized and exist-

ing under the laws of the State of Maine, in so far as the device covered thereby may be used with printing telegraph apparatus.

XII. As the plaintiff is informed and believes the defendant has at various times collected and received various sums of money from divers persons as royalties or license fees in connection with and arising out of said letters patent, which said moneys in equity and good conscience belong to the plaintiff and the said defendant holds the same in trust and for the benefit of the plaintiff.

[fol. 113] XIII. The said Francis W. Dunmore and Morkrum Company are not made parties to this action because they are not within the jurisdiction of this Court in that, as the plaintiff is informed and believes, the said Dunmore is an inhabitant of the District of Columbia and the said Morkrum Company is an inhabitant of the District of Maine.

XIV. The plaintiff has no remedy at law.

Wherefore, the plaintiff prays this Honorable Court as follows:

1. That it be adjudged and decreed that the plaintiff is the owner of the invention hereinabove referred to and the defendant holds its interest therein as trustee and for the benefit of the plaintiff.

2. That it be adjudged and decreed that the plaintiff is the owner of letters patent of the United States numbered 1,635,117, and issued on July 5, 1927, and that the defendant holds its interest therein as trustee and for the benefit of the plaintiff.

3. That the defendant be directed and compelled to assign, transfer and convey to the plaintiff all its right, title and interest in and to the aforesaid invention and the aforesaid letters patent.

4. That the defendant be compelled and directed to account and pay over to the plaintiff all moneys received by it in connection with or arising out of the said invention and the said letters patent.

5. That the plaintiff have such other and further relief as to the court may seem just, together with the costs of this action.

6. That this Honorable Court issue its writ of subpoena in due form of law and according to the course and practice of this court directed to the said defendant Dubilier Condenser Corporation, commanding it at a certain date and under a certain penalty to be therein specified, to appear before this Honorable Court to answer all and singular the [fol. 114] matters hereinbefore set forth and complained of and to stand by and abide and perform all of the orders and decrees of the court herein.

(Sgd.) Charles B. Rugg, Assistant Attorney General. (Sgd.) Alexander Holtzoff, Special Assistant to the Attorney General, of Counsel. (Sgd.) Leonard E. Wales, United States Attorney for the District of Delaware.

A true copy—Attest:

H. C. Mahaffy, Jr., Clerk.

[fol. 115] IN THE DISTRICT COURT OF THE UNITED STATES FOR THE DISTRICT OF DELAWARE

Equity No. 790

UNITED STATES OF AMERICA, Plaintiff,

v.

DUBILIER CONDENSER CORPORATION, Defendant

ANSWER

Now comes the defendant above named and answers plaintiff's bill of complaint as follows:

I. Defendant admits the allegations contained in paragraph I of the bill of complaint.

II. Defendant admits the allegations contained in paragraph II of the bill of complaint.

III. Defendant denies each and every of the allegations contained in paragraph III of the bill of complaint.

IV. Answering paragraph IV of the bill of complaint, defendant says that it has no knowledge sufficient to form a belief of the matters therein alleged, and therefore neither admits nor denies the same but leaves the plaintiff to make such proof thereof as it may be advised if the allegations in said paragraph are deemed material.

V. Answering paragraph V of the bill of complaint, defendant says that it has no knowledge sufficient to form a belief of the matters therein alleged, and therefore neither admits nor denies the same but leaves the plaintiff to make such proof thereof as it may be advised if the allegations in said paragraph are deemed material.

V. Answering paragraph VI of the bill of complaint, defendant says that it has no knowledge sufficient to form a belief of the matters therein alleged, and therefore neither [fol. 116] admits nor denies the same but leaves the plaintiff to make such proof thereof as it may be advised if the allegations in said paragraph are deemed material.

VII. Answering paragraph VII of the bill of complaint, defendant says that it has no knowledge sufficient to form a belief of the matters alleged in the first two sentences therein, and therefore neither admits nor denies the same but leaves the plaintiff to make such proof thereof as it may advise if the allegations in said two sentences are deemed material. The defendant denies each and every of the other allegations contained in said paragraph numbered VII.

VIII. Answering paragraph VIII of the bill of complaint, defendant says that it has no knowledge sufficient to form a belief of the matters alleged in the first sentence therein, and therefore neither admits nor denies the same but leaves the plaintiff to make such proof thereof as it may advise if the allegations in said sentence are deemed material. The defendant denies each and every of the other allegations contained in said paragraph numbered VIII.

IX. As to the matters alleged in paragraph IX of the bill of complaint, defendant admits that on February 27, 1922 one Francis W. Dunmore filed application for United States Letters Patent and secured thereon on February 5,

1927 Letters Patent of the United States numbered 1,635,-117. As to all other matters in paragraph IX the defendant says that it has no knowledge sufficient to form a belief of the matters therein alleged, and therefore neither admits nor denies the same but leaves the plaintiff to make such proof thereof as it may be advised if the allegations in said paragraph are deemed material.

X. Defendant denies each and every of the allegations contained in paragraph X of the bill of complaint, and defendant further alleges that no officer or agency of the United States Government was or is authorized to acquire the invention of the Letters Patent 1,635,117 on behalf of the Government.

[fol. 117] XI. Answering paragraph XI of the bill of complaint, defendant admits that a license was granted to it and to the Morkrum Company under the Letters Patent number 1,635,117, and defendant denies each and every of the other allegations contained in the said paragraph XI.

XII. Answering paragraph XII of the bill of complaint, defendant admits that it has at various times collected and received various sums of money from divers persons as royalties or license fees in connection with and arising out of Letters Patent numbered 1,635,117, but defendant denies that any of the said money belongs to plaintiff and denies that it holds the said money or any other property for the benefit of the plaintiff.

XIII. Answering paragraph XIII of the bill of complaint, defendant says that it has no knowledge sufficient to form a belief of the matters therein alleged, and therefore neither admits nor denies the same but leaves the plaintiff to make such proof thereof as it may be advised if the allegations in said paragraph are deemed material.

XIV. Answering paragraph XIV of the plaintiff's bill of complaint, defendant denies the allegations contained therein.

Wherefore having duly answered the bill of complaint, this defendant denies that the plaintiff is entitled to the

relief demanded or to any part of the same and prays that the bill of complaint be dismissed with costs.

Dubilier Condenser Corporation, by Roy E. Sweney, Secretary-Treasurer. James H. Hughes, Jr., Solicitor for Defendant. Edwards, Bower and Pool, of Counsel for Defendant.

[fol. 118] STATE OF NEW YORK,
County of Bronx, ss:

Roy E. Sweney, being duly sworn, deposes and says that he is Secretary-Treasurer of the Dubilier Condenser Corporation, the defendant in this suit, that he has read the foregoing answer to the bill of complaint in this suit and knows the contents thereof and that the same is true of his own knowledge except as to the matters therein stated to be alleged upon information and belief, and as to those matters he believes it to be true.

Roy E. Sweney.

Sworn to and subscribed before me this 20th day of May, 1930.

R. I. MacGeorge, Notary Public. (Notarial Seal.)
Notary Public, N. Y. Co. No. 573.
N. Y. Co. Reg. No. 1-M-734.
Bronx Co. Clerk No. 76.
Bronx Co. Reg. No. 3122-B.
Commission expires March 30, 1931.

[fol. 119] IN THE DISTRICT COURT OF THE UNITED STATES FOR THE DISTRICT OF MAINE, SOUTHERN DIVISION

In Equity

No. 927

UNITED STATES OF AMERICA, Plaintiff,

v.

MORKRUM COMPANY, Defendant

BILL OF COMPLAINT

To the Honorable Judge of the District Court of the United States for the District of Maine.

The United States of America brings this its bill of complaint against Morkrum Company, and for cause of action alleges:

I. This is a suit in equity brought by the United States of America as plaintiff.

II. As the plaintiff is informed and believes, the defendant Morkrum Company is a corporation organized under the laws of the State of Maine and an inhabitant of the State of Maine.

III. At all times hereinafter mentioned, the Bureau of Standards was and now is a subdivision of the Department of Commerce. The functions of said Bureau of Standards comprise the custody of standards; the comparison of the standards used with the standards adopted or recognized by the Government; the construction, the testing and the calibration of standards; and the conduct of scientific investigation, experimentation, studies and research in general.

[fol. 120] IV. At all times hereinafter mentioned the Bureau of Standards maintained and now maintains a radio section. The said radio section carries on calibration of various radio instruments, and conducts scientific investigation, experiments, studies and research in the radio field, and prepares and publishes scientific papers containing the results of its work for the purpose of disseminating knowledge to the parties interested therein and to the public generally. For the purpose of carrying on its work the said radio section maintains a radio laboratory.

V. As the plaintiff is informed and believes, one Francis W. Dunmore is a physicist and is trained in carrying on research and experimentation in various branches of physics and the science of electricity, including radio. From January 14, 1918, to date, the said Dunmore was employed in said radio section in the successive capacities of laboratory assistant and associate physicist. It was one of the duties of said Dunmore to carry on investigation, research and experimentation in such problems relating to radio and wireless as might be assigned to him by his superiors and to report the results thereof to his said superiors.

VI. In the course of his employment as aforesaid, there was assigned to said Dunmore by his superiors in said radio section, for investigation and research, the problem of

developing a radio receiving system operating a relay for the local or remote control of auxiliary apparatus.

VII. As the plaintiff is informed and believes, the said Dunmore pursuant to the aforesaid direction and instructions given him by his superiors proceeded to carry on studies, research, investigation and experimentation in said problem. The aforesaid work was done by said Dunmore at said radio laboratory of the Bureau of Standards with apparatus and materials which were the property of the plaintiff, and during his usual hours of employment. The aforesaid work was done by said Dunmore as one of the duties of his employment as aforesaid, and the results and product of said work is the property of the plaintiff.

VIII. Sometime prior to the 27th day of February, 1922, the said Dunmore solved the problem assigned to him by [fol. 121] his superiors as aforesaid and completed the said work hereinabove referred to by developing and inventing an apparatus known as a "radio relay". The aforesaid development and invention and all rights and interests therein are the property of the United States.

IX. As the plaintiff is informed and believes, the said Dunmore in disregard of his duties to the plaintiff and ignoring the rights of the plaintiff, and without the knowledge or approval of the plaintiff, filed in the United States Patent Office on February 27, 1922, an application for letters patent on said invention. Thereafter on July 5, 1927, letters patent of the United States numbered 1,635,117, and covering the said invention were issued to said Francis W. Dunmore on the basis of the said application.

X. The aforesaid letters patent are in equity and good conscience the property of the United States. Although the plaintiff demanded that the aforesaid letters patent be conveyed to the plaintiff, such demand has not been complied with.

XI. As the plaintiff is informed and believes the said Dunmore has unlawfully and illegally and in disregard of the plaintiff's rights purported to grant an exclusive license under the said letters patent to the defendant Morkrum Company, in so far as the device covered thereby may be used with printing telegraph apparatus; and to Dubilier Condenser Corporation, a corporation organized and exist-

ing under the laws of the State of Delaware, in so far as the said letters patent cover radio telephone broadcast receiving apparatus.

XII. As the plaintiff is informed and believes the defendant has at various times collected and received various sums of money from divers persons as royalties or license fees in connection with and arising out of said letters patent, which said moneys in equity and good conscience belong to the plaintiff and the said defendant holds the same in trust and for the benefit of the plaintiff.

XIII. The said Francis W. Dunmore and Dubilier Condenser Corporation are not made parties to this action be- [fol. 122] cause they are not within the jurisdiction of this court in that, as the plaintiff is informed and believes, the said Dunmore is an inhabitant of the District of Columbia and the said Dubilier Condenser Corporation is an inhabitant of the District of Delaware.

XIV. The plaintiff has no remedy at law.

Wherefore, the plaintiff prays this Honorable Court as follows:

1. That it be adjudged and decreed that the plaintiff is the owner of the invention hereinabove referred to and the defendant holds its interest therein as trustee and for the benefit of the plaintiff.

2. That it be adjudged and decreed that the plaintiff is the owner of letters patent of the United States numbered 1,635,117, and issued on July 5, 1927, and that the defendant holds its interest therein as trustee and for the benefit of the plaintiff.

3. That the defendant be directed and compelled to assign, transfer and convey to the plaintiff all its right, title and interest in and to the aforesaid invention and the aforesaid letters patent.

4. That the defendant be compelled and directed to account and pay over to the plaintiff all moneys received by it in connection with or arising out of the said invention and the said letters patent.

5. That the plaintiff have such other and further relief as to the court may seem just, together with the costs of this action.

6. That this Honorable Court issue its writ of subpoena in due form of law and according to the course and practice of this court directed to the said defendant Morkrum Company, commanding it at a certain date and under a certain penalty to be therein specified, to appear before this Honorable Court to answer all and singular the matters here- [fol. 123] inbefore set forth and complained of and to stand by and abide and perform all the orders and decrees of the court herein.

Charles B. Rugg, Assistant Attorney General. Alexander Holtzoff, Special Assistant to the Attorney General, of Counsel. Frederick R. Dyer, United States Attorney for the District of Maine.

[fol. 124] IN THE DISTRICT COURT OF THE UNITED STATES FOR THE DISTRICT OF MAINE, SOUTHERN DIVISION

In Equity

No. 927

UNITED STATES OF AMERICA, Plaintiff,

v.

MORKRUM COMPANY, Defendant

ANSWER

Now comes the defendant above named and answers plaintiff's bill of complaint as follows:

I. Defendant admits the allegations contained in paragraph I of the bill of complaint.

II. Defendant admits the allegations contained in paragraph II of the Bill of Complaint.

III. Defendant denies the allegations contained in paragraph III of plaintiff's bill of complaint.

IV. Answering paragraph IV of the bill of complaint, defendant says that it has no knowledge sufficient to form a belief of the matters therein alleged, and therefore neither admits nor denies the same but leaves the plaintiff to make such proof thereof as it may be advised if the allegations in said paragraph are deemed material.

V. Answering paragraph V of the bill of complaint, defendant says that it has no knowledge sufficient to form a belief of the matters therein alleged, and therefore neither admits nor denies the same but leaves the plaintiff to make such proof thereof as it may be advised if the allegations in said paragraph are deemed material.

VI. Answering paragraph VI of the bill of complaint, defendant says that it has no knowledge sufficient to form a belief of the matters therein alleged, and therefore neither [fol. 125] admits nor denies the same but leaves the plaintiff to make such proof thereof as it may be advised if the allegations in said paragraph are deemed material.

VII. Answering paragraph VII of the bill of complaint, defendant says that it has no knowledge sufficient to form a belief of the matters alleged in the first two sentences therein, and therefore neither admits nor denies the same but leaves the plaintiff to make such proof thereof as it may advise if the allegations in the said first two sentences of said paragraph VII are deemed material. The defendant denies each and every of the other allegations contained in said paragraph numbered VII.

VIII. Answering paragraph VIII of the bill of complaint, defendant says that it has no knowledge sufficient to form a belief of the matters alleged in the first sentence therein, and therefore neither admits nor denies the same but leaves the plaintiff to make such proof thereof as it may advise if the allegations in said sentence are deemed material. The defendant denies each and every of the other allegations contained in said paragraph numbered VIII.

IX. As to the matters alleged in paragraph IX of the bill of complaint, defendant admits that on February 27, 1922 one Francis W. Dunmore filed application for United States Letters Patent and secured thereon on July 5, 1927, Letters Patent of the United States Numbered 1,635,117. As to all other matters in paragraph IX the defendant says that it has no knowledge sufficient to form a belief of the matters therein alleged, and therefore neither admits nor denies the same but leaves the plaintiff to make such proof thereof as it may be advised if the allegations in said paragraph are deemed material.

X. Defendant denies each and every of the allegations contained in paragraph X of the bill of complaint, and defendant further alleges that no officer or agency of the United States Government was or is authorized to acquire the invention of the letters Patent 1,635,117 on behalf of the Government.

XI. Answering paragraph XI of the bill of complaint, defendant admits that a license was granted to it under [fol. 126] Letters Patent 1,635,117, but defendant has no knowledge of the grant of a license to Dubilier Condenser Corporation and therefore neither admits nor denies the same. Defendant denies each and every of the other allegations contained in the said paragraph XI.

XII. Answering paragraph XII of the bill of complaint, defendant denies each and every of the allegations contained therein.

XIII. Answering paragraph XIII of the bill of complaint, defendant says that it has no knowledge sufficient to form a belief of the matters therein alleged, and therefore neither admits nor denies the same but leaves the plaintiff to make such proof thereof as it may be advised if the allegations in said paragraph are deemed material.

XIV. Answering paragraph XIV of the plaintiff's bill of complaint, defendant denies the allegation contained therein.

Wherefore having duly answered the bill of complaint, this defendant denies that the plaintiff is entitled to the relief demanded or to any part of the same and prays that the bill of complaint be dismissed with costs.

Morkrum Company, by Sterling Morton, President.
Attest: Charles T. Pulham, Secretary. (Seal.)
McLeon, Fogg & Southard, Solicitors for Defendant. John B. Brady, of Counsel for Defendant.

[fols. 127-131] State of Illinois,
County of Cook, ss:

Sterling Morton, being duly sworn, deposes and says that he is President of Morkrum Company, the defendant in this suit, that he has read the foregoing Answer to the Bill of Complaint in this suit and knows the contents thereof, and that the same is true of his own knowledge ex-

cept as to the matters therein stated to be alleged upon information and belief, and as to those matters he believes it to be true.

Sterling Morton.

Sworn to and subscribed before me this 14th day of May, 1930.

Luther Victor Krause, Notary Public. (Seal.)

[fol. 132] EXHIBIT "C", ATTACHED TO PLAINTIFFS' AFFIDAVIT IN OPPOSITION TO THE MOTION TO DISMISS—Filed 13th June, 1934

IN THE SUPREME COURT OF THE DISTRICT OF COLUMBIA

To all to whom these presents come, Greeting:

UNITED STATES OF AMERICA,
District of Columbia, ss:

Be it remembered, that in the Supreme Court of the District of Columbia, at the City of Washington, in said District, at the times hereinafter mentioned, among others were the following proceedings, to wit:

Filed Jun. 8, 1933. Frank E. Cunningham, Clerk.

IN THE SUPREME COURT OF THE DISTRICT OF COLUMBIA

Equity No. 51,322

UNITED STATES

vs.

FRANCIS W. DUNMORE

MOTION TO DISMISS

Comes now the plaintiff, by its attorney, Lee A. Rover, United States Attorney in and for the District of Columbia, and moves the Court for permission to dismiss the above entitled cause, and states as a ground therefor that the matters involved in this suit have been adjudicated in another jurisdiction in such a manner as to preclude the

plaintiff from successfully prosecuting this cause of action.

Leo A. Rover, United States Attorney. John W. Fihelly, Assistant United States Attorney.

[fol. 133] Filed Jun. 8, 1933. Frank E. Cunningham, Clerk.

IN THE SUPREME COURT OF THE DISTRICT OF COLUMBIA

Equity No. 51,322

UNITED STATES

vs.

FRANCIS W. DUNMORE

ORDER OF DISMISSAL

Upon motion of the plaintiff's attorney, Leo A. Rover, United States Attorney in and for the District of Columbia, and it appearing to the court that the matters involved in the above entitled cause have been adjudicated in another jurisdiction in such manner as to preclude the plaintiff from successfully prosecuting this cause of action, and upon consent of counsel for the defendant, it is by the Court, this 8th day of June, 1933,

Ordered and decreed that the above entitled cause of action be and the same is hereby dismissed.

James M. Proctor, Justice.

I consent.

John B. Brady, Attorney for Defendant.

Filed Jun. 8, 1933 Frank E. Cunningham, Clerk.

IN THE SUPREME COURT OF THE DISTRICT OF COLUMBIA

Equity No. 51,323

UNITED STATES

vs.

FRANCIS W. DUNMORE

MOTION TO DISMISS

Comes now the plaintiff, by its attorney, Leo A. Rover, United States Attorney in and for the District of Colum-

[fol. 134] bia, and moves the Court for permission to dismiss the above entitled cause, and states as a ground therefor that the matters involved in this suit have been adjudicated in another jurisdiction in such a manner as to preclude the plaintiff from successfully prosecuting this cause of action.

Leo A. Rover, United States Attorney. John W. Fihelly, Assistant United States Attorney.

Filed Jun. 8, 1933. Frank E. Cunningham, Clerk.

IN THE SUPREME COURT OF THE DISTRICT OF COLUMBIA

Equity No. 51,323

UNITED STATES

vs.

FRANCIS W. DUNMORE

ORDER OF DISMISSAL

Upon motion of the plaintiff's attorney, Leo. A. Rover, United States Attorney in and for the District of Columbia, and it appearing to the court that the matters involved in the above entitled cause have been adjudicated in another jurisdiction in such manner as to preclude the plaintiff from successfully prosecuting this cause of action, and upon consent of counsel for the defendant, it is by the Court, this 8th day of June, 1933,

Ordered and decreed that the above entitled cause of action be and the same is hereby dismissed.

James M. Proctor, Justice.

I consent.

John B. Brady, Attorney for Defendant.

[fol. 135] Filed Jun. 8, 1933. Frank E. Cunningham, Clerk.

IN THE SUPREME COURT OF THE DISTRICT OF COLUMBIA

Equity No. 51,324

UNITED STATES

vs.

FRANCIS W. DUNMORE

MOTION TO DISMISS

Comes now the plaintiff, by its attorney, Leo A. Rover, United States Attorney in and for the District of Columbia and moves the Court for permission to dismiss the above entitled cause, and states as a ground therefor that the matters involved in this suit have been adjudicated in another jurisdiction in such a manner as to preclude the plaintiff from successfully prosecuting this cause of action.

Leo A. Rover, United States Attorney. John W. Fihelly, Assistant United States Attorney.

[fol. 136] Filed Oct. 23, 1933. Frank E. Cunningham, Clerk.

IN THE SUPREME COURT OF THE DISTRICT OF COLUMBIA

In Equity

No. 53,937

ALBERT S. BLATTERMAN, 1304 Wanamassa Drive, Asbury Park, N. J., Plaintiff,

vs.

PERCIVAL D. LOWELL, Airways Division, Department of Commerce, Washington, D. C.—FRANCIS W. DUNMORE, 3411 Rodman Street, N. W., Washington, D. C., Defendants

NOTICE

John B. Brady, Esq., Attorney for Lowell & Dunmore, Ouray Building, Washington, D. C.

DEAR SIR:

Please take notice that I have this day filed a Motion to Dismiss in the above entitled cause and copy thereof is hereby served upon you.

Respectfully, David P. Wolhaupter, Solicitor and Counsel for Plaintiff, 700 Tenth Street, N. W., Washington, D. C.

[fol. 137] Services of a copy of the foregoing Motion acknowledged this 23rd day of October, 1933.

John B. Brady, Attorney for Lowell & Dunmore.

Filed Jun. 8, 1933. Frank E. Cunningham, Clerk.

IN THE SUPREME COURT OF THE DISTRICT OF COLUMBIA

Equity No. 51,324

UNITED STATES

vs.

FRANCIS W. DUNMORE

ORDER OF DISMISSAL

Upon motion of the plaintiff's attorney, Leo A. Rover, United States Attorney in and for the District of Columbia, and it appearing to the court that the matters involved in the above entitled cause have been adjudicated in another jurisdiction in such manner as to preclude the plaintiff from successfully prosecuting this cause of action, and upon consent of counsel for the defendant, it is by the Court, this 8th day of June, 1933,

Ordered and decreed that the above entitled cause of action be and the same is hereby dismissed.

James M. Proctor, Justice.

I consent.

John B. Brady, Attorney for Defendant.

[fol. 138] Filed Oct. 23, 1933. Frank E. Cunningham, Clerk.

IN THE SUPREME COURT OF THE DISTRICT OF COLUMBIA

In Equity

No. 53,937

ALBERT S. BLATTERMAN, 1304 Wanamassa Drive, Asbury Park, N. J., Plaintiff,

vs.

PERCIVAL D. LOWELL, Airways Division, Department of Commerce, Washington, D. C.—FRANCIS W. DUNMORE, 3411 Rodman Street, N. W., Washington, D. C. Defendants

MOTION BY PLAINTIFF TO DISMISS BILL OF COMPLAINT

Now comes the plaintiff above named and respectfully represents to this Honorable Court that he has exhibited his bill against the defendants, Pervical D. Lowell and Francis W. Dunmore; that the said defendants have appeared thereto, but have not prayed for any affirmative relief, and will not be prejudiced in any substantial right by dismissal of the plaintiff's bill; and that the plaintiff is now advised to dismiss his said bill.

Wherefore, the plaintiff moves that the bill be dismissed out of this Court, without prejudice, and without costs against either party.

David P. Wolhaupter, Solicitor and Counsel for Plaintiff, 700 Tenth St., N. W., Washington, D. C.

Assented to.

John B. Brady, Solicitor and Counsel for Defendants.

[fol. 139] Filed Oct. 24, 1933. Frank E. Cunningham, Clerk.

IN THE SUPREME COURT OF THE DISTRICT OF COLUMBIA

In Equity

No. 53,937

ALBERT S. BLATTERMAN, 1304 Wanamassa Drive, Asbury Park, N. J., Plaintiff,

vs.

PERCIVAL D. LOWELL, Airways Division, Department of Commerce, Washington, D. C.—FRANCIS W. DUNMORE, 3411 Rodman Street, N. W., Washington, D. C. Defendants

ORDER

On motion of plaintiff, by his attorney, it is this 23rd day of October, 1933, ordered that this case be and the same is hereby dismissed without cost to any of the parties.

F. D. Letts, Judge, Supreme Court of the District of Columbia.

David P. Wolhaupter, Solicitor and Counsel for Plaintiff.

[fol. 140] Filed Oct. 23, 1933. Frank E. Cunningham, Clerk.

IN THE SUPREME COURT OF THE DISTRICT OF COLUMBIA

In Equity

No. 53,938

WIRED RADIO, INC., and ROBERT D. DUNCAN, JR., Plaintiffs,

vs.

PERCIVAL D. LOWELL, FRANCIS W. DUNMORE, ALBERT S. BLATTERMAN, and Westinghouse Electric & Manufacturing Company, Defendants

MOTION BY PLAINTIFFS TO DISMISS

Now comes the plaintiffs above named and respectfully represent to this Honorable Court that they have exhibited their bill against the defendants, Percival D. Lowell, Francis W. Dunmore, Albert S. Blatterman and Westinghouse

Electric & Manufacturing Company; that the said defendants have appeared thereto, but have not prayed for any affirmative relief, and will not be prejudiced in any substantial right by a dismissal of the plaintiff's bill, and that the plaintiffs are now advised to dismiss their said bill.

Wherefore the plaintiffs move that the said bill be dismissed out of this Court, without prejudice, and without costs against any party.

James F. Pierce, Solicitor and Counsel for Plaintiffs, 1319 F Street Northwest, Washington, D. C.

Dated October 19th, 1933.

[fol. 141] Filed Oct. 23, 1933. Frank E. Cunningham, Clerk.

IN THE SUPREME COURT OF THE DISTRICT OF COLUMBIA

In Equity

No. 53,938

WIRED RADIO, INC., and ROBERT D. DUNCAN, JR., Plaintiffs,

vs.

PERCIVAL D. LOWELL, FRANCIS W. DUNMORE, ALBERT S. BLATTERMAN, and Westinghouse Electric & Manufacturing Company, Defendants

NOTICE

John B. Brady, Esq., Ouray Building, Washington, D. C., Atty. for Lowell & Dunmore; Richard H. Wilmer, Esq., Transportation Bldg., Washington, D. C., Atty. for Westinghouse Electric & Mfg. Co.; David P. Wolhaupter, Esq., McLachlen Building, Washington, D. C., Atty. for Blatterman.

GENTLEMEN:

Please take notice that I have this day filed a Motion to Dismiss in the above-entitled cause and a copy thereof is hereby served upon you.

Respectfully, James F. Pierce, Counsel for Plaintiffs, 1319 F Street, N. W., Washington, D. C.

[fol. 142] Service of a copy of the foregoing Motion acknowledged this 23rd day of October, 1933.

John B. Brady, Atty. for Lowell & Dunmore. Richard H. Wilmer, Atty. for Westinghouse Electric & Mfg. Co. D. P. Wolhaupter, Atty. for Blatterman.

Filed Nov. 7, 1933. Frank E. Cunningham, Clerk.

IN THE SUPREME COURT OF THE DISTRICT OF COLUMBIA

In Equity

No. 53,938

WIRED RADIO, INC., and ROBERT D. DUNCAN, JR., Plaintiffs,

vs.

PERCIVAL D. LOWELL, FRANCIS W. DUNMORE, ALBERT S. BLATTERMAN, and Westinghouse Electric & Manufacturing Company, Defendants

ORDER

On motion of plaintiffs, by their attorney, it is this 7th day of November, 1933, ordered that this case be and the [fol. 143] same is hereby dismissed, without cost to any of the parties.

F. D. Letts, Justice, Supreme Court of the District of Columbia.

James F. Pierce,
Solicitor and Counsel for Plaintiffs.

Above order consented to by:

John B. Brady, Attorney for Lowell & Dunmore; Richard H. Wilmer, Attorney for Westinghouse Electric & Mf[illegible]o.; David P. Wolhaupter, Attorney for Blatterman.

AUTHENTICATION

Supreme Court of the District of Columbia:

I, Frank E. Cunningham, Clerk of the said Court, do hereby certify that the writings annexed to this certificate

are true copies of originals on file and of record in said Court in this cause.

Witness my hand and the seal of said Court, this 5th day of June, 1934.

Frank E. Cunningham, Clerk. (Seal.)

I, Alfred A. Wheat, Chief Justice of said Court, do hereby certify the foregoing attestation by Frank E. Cunningham, Clerk of the said Court, to be in due form.

Witness my hand and seal this 5th day of June, 1934.

Alfred A. Wheat, Chief Justice. (Seal.)

I, Frank E. Cunningham, Clerk of said Court, hereby certify that the Honorable Alfred A. Wheat, whose genuine [fol. 144] signature is subscribed to the foregoing certificate, was, at the time of signing and attesting the same, Chief Justice of said Court, duly commissioned and qualified.

Witness my hand and the seal of said Court, this 5th day of June, 1934.

Frank E. Cunningham, Clerk. (Seal.)

EXHIBIT "D", ATTACHED TO PLAINTIFF'S AFFIDAVIT IN OPPOSITION TO THE MOTION TO DISMISS—Filed 13th June, 1934

At a stated term of the United States District Court, held in and for the Eastern District of New York, at the Post Office Building, in the Borough of Brooklyn, City of New York, on the 3rd day of July, 1933.

Present: Honorable Robert A. Inch, District Judge.

E—4934

UNITED STATES OF AMERICA, Plaintiff,

against

PERCIVAL D. LOWELL, Defendant

Upon motion of plaintiff's attorney, Howard W. Ameli, United States Attorney in and for the Eastern District of New York, and upon the annexed stipulation dated June

27, 1933, and the letter from the Attorney General of the United States, dated June 6, 1933, a copy of which is annexed to said stipulation, and it appearing to the Court that the matters involved in the above entitled cause have been adjudicated in another jurisdiction in such manner as to preclude the plaintiff from successfully prosecuting this cause of action, and upon the subjoined consent of counsel for the defendant, it is

Ordered and decreed that the above entitled cause of action be and the same hereby is dismissed without costs to either party as against the other.

Robert A. Inch, United States District Judge.

[fol. 145] Entry of the foregoing order is hereby consented to and notice of the presentation thereof waived.

Raiemond E. Dee, Attorney for Defendant.

A true copy—Attest:

Percy W. B. Gilkes, Clerk, by S. R. Fener, Deputy Clerk. (Seal.)

Dated August 12th, 1933.

UNITED STATES DISTRICT COURT, EASTERN DISTRICT OF NEW YORK

E—4934

UNITED STATES OF AMERICA, Plaintiff,

against

PERCIVAL D. LOWELL, Defendant

It is hereby stipulated and agreed by and between the attorneys for the respective parties hereto, in accordance with letter of June 6, 1933, from the Department of Justice to the United States Attorney, a copy of which is hereunto annexed and made a part hereof, that the above entitled action be and the same hereby is, dismissed without costs to either party, and that an order in the form hereunto annexed, may be entered thereon without further notice.

Dated: Brooklyn, N. Y., June 27, 1933.

Howard W. Ameli, United States Attorney, Attorney for Plaintiff, by Albert D. Smith, Assistant United States Attorney. Raiemond E. Dee, Attorney for Plaintiff.

12—6689-C

[fol. 146] EXHIBIT "E", ATTACHED TO PLAINTIFF'S AFFIDAVIT IN OPPOSITION TO THE MOTION TO DISMISS—Filed 13th June, 1934

At a stated term of the United States District Court, held in and for the Eastern District of New York, at the Post Office Building, in the Borough of Brooklyn, City of New York, on the 3rd day of July, 1933.

Present: Honorable Robert A. Inch, District Judge.

E—4935

UNITED STATES OF AMERICA, Plaintiff,

against

PERCIVAL D. LOWELL, Defendant

Upon motion of the plaintiff's attorney, Howard W. Ameli, United States Attorney in and for the Eastern District of New York, and upon the annexed stipulation dated June 27, 1933, and the letter from the Attorney General of the United States, dated June 6, 1933, a copy of which is annexed to said stipulation, and it appearing to the Court that the matters involved in the above entitled cause have been adjudicated in another jurisdiction in such manner as to preclude the plaintiff from successfully prosecuting this cause of action, and upon the subjoined consent of counsel for the defendant, it is

Ordered and decreed that the above entitled cause of action be and the same hereby is dismissed without costs to either party as against the other.

Robert A. Inch, United States District Judge.

Entry of the foregoing order is hereby consented to and notice of the presentation thereof waived.

Raiemond E. Dee, Attorney for Defendant.

A true copy—Attest:

Percy W. B. Gilkes, Clerk, by S. R. Fener, Deputy Clerk. (Seal.)

Dated August 12th, 1933.

[fol. 147] UNITED STATES DISTRICT COURT, EASTERN DISTRICT OF NEW YORK

E—4935

UNITED STATES OF AMERICA, Plaintiff,

against

PERCIVAL D. LOWELL, Defendant

It is hereby stipulated and agreed by and between the attorneys for the respective parties hereto, in accordance with letter of June 6, 1933, from the Department of Justice to the United States Attorney, a copy of which is hereunto annexed and made a part hereof, that the above entitled action be, and the same hereby is, dismissed without costs to either party, and that an order in the form hereunto annexed, be entered thereon without further notice.

Dated: Brooklyn, N. Y., June 27, 1933.

Howard W. Ameli, United States Attorney, Attorney for Plaintiff, by Albert D. Smith, Assistant United States Attorney. Raiemond E. Dee, Attorney for Defendant.

[fol. 148] EXHIBIT "F", ATTACHED TO PLAINTIFF'S AFFIDAVIT IN OPPOSITION TO THE MOTION TO DISMISS—Filed 13th June, 1934

IN THE SUPREME COURT OF THE DISTRICT OF COLUMBIA

In Equity

No. 53938

WIRED RADIO, INC., Plaintiff,

vs.

PERCIVAL D. LOWELL ET AL., Defendant

The President of the United States to Francis W. Dunmore, 3411 Rodman, Defendant—Greeting:

You are hereby commanded to appear before the Supreme Court of the District of Columbia to answer a bill of com-

plaint (or petition) exhibited against you in the said Court in a suit in Equity by the above-named plaintiff, and to further do and receive what the said Court shall have considered in this behalf; and hereof fail not.

Witness the Honorable Chief Justice of said Court, the 23rd day of January, A. D. 1932.

Frank E. Cunningham, Clerk, by Harry W. Hull, Assistant Clerk. (Seal.)

——— ———, Attorney.

Note.—The defendant is required to file his answer or other defense in the Clerk's office on or before the twentieth day after service, excluding the day thereof; otherwise, the bill may be taken pro confesso.

[fol. 149] Supreme Court of the District of Columbia, Washington, D. C.

In Equity

No. 53938

Wired Radio, Inc., 60 Broadway, New York, N. Y., Robert D. Duncan, Jr., East Orange, New Jersey, Plaintiffs,

vs.

Percival D. Lowell, 8533—148th Street, Jamaica, New York; Francis W. Dunmore, 3411 Rodman Street, Washington, D. C.; Albert S. Blatterman, 1208 Wanamassa Drive, Asbury Park, New Jersey; Westinghouse Electric & Mfg. Co., East Pittsburgh, Pennsylvania

Bill of Complaint

To the Honorable Judges of this Court:

Plaintiffs state:

1. Wired Radio, Inc., a Delaware corporation having its principal place of business at 60 Broadway, City, County and State of New York, and Robert D. Duncan, Jr., a citizen of the United States, residing at East Orange, County of Essex, State of New Jersey, plaintiffs, bring this their Bill of Complaint against Percival D. Lowell, residing at 8533 148th Street, Jamaica, New York, and Francis W. Dunmore, residing at 3411 Rodman Street, Washington, D. C.,

Albert S. Blatterman, residing at 1208 Wanamassa Drive; [fol. 150] Asbury Park, New Jersey, and Westinghouse Electric and Manufacturing Company (assignee of Pupin), a Pennsylvania corporation having a place of business at East Pittsburgh, Pennsylvania.

2. This is a proceeding under the patent laws of the United States, Section 4915 of the Revised Statutes, U. S. Comp. Stat., Section 9460.

3. The plaintiffs have not appealed to the United States Court of Customs and Patent Appeals and no appeal is pending before said Court in this matter.

4. The question involved in this proceeding is that of priority of invention as between the interference parties in respect to claims 2, 20, 21 and 18 of U. S. Patent No. 1,455,141 to defendants, Lowell and Dunmore, granted May 15, 1923 on an application filed March 27, 1922. Claim 2 of said patent is the sole count of Patent Office Interference No. 53,154 involving the four (4) interference parties, Pupin, Duncan, Lowell and Dunmore, and Blatterman. Claims 20 and 21 of said patent are counts 1 and 2, respectively, of Interference No. 53,155 involving the two (2) interference parties, Duncan and Lowell and Dunmore. Claim 18 of said patent is an issue on which plaintiffs seek an award of priority de novo.

5. The invention involved in this proceeding is defined by claims 2, 20, 21 and 18 of said Lowell and Dunmore patent. Each of said claims is limited to apparatus for the reception of or for receiving radio signals, a source of alternating current for supplying power thereto and means for eliminating the hum of said alternating current. In addition; claim 2 specifies that the means for eliminating hum in the radio receiving apparatus be connected to the amplifying and rectifying means of the radio receiver, claim 20 specifies that the means eliminate hum in the reproducing means and be connected in circuit with said reproducing means, claim 21 specifies that the means serving to eliminate hum in the apparatus have fixed means in circuit with the grid and plate electrodes of the vacuum tubes and variable means in circuit with the grid electrodes, and claim 18 specifies that the means for eliminating hum be con-

nected in circuit with the grid and plate electrodes of the vacuum tubes.

[fol. 151] 6. The plaintiff, Robert D. Duncan, Jr., one of the interfering parties, and not the said Percival D. Lowell and Francis W. Dunmore, was the original, first and sole inventor of said invention described and claimed in said claims and in his annexed specification Serial No. 669,662; and said patent No. 1,455,141 to Lowell and Dunmore was improperly and inadvertently issued to the defendant Lowell and Dunmore.

7. The plaintiff Duncan conceived, explained said invention to others, constructed a full-size radio device embodying said invention and reduced said embodiment to practice by successful tests during April, 1921 and prior to May 7, 1921; and subsequently in May, 1923 commercially adopted said invention in commercial devices which embodied not only the arrangement of his April, 1921 device, but also the identical system of hum elimination that was embodied in said April, 1921, device.

8. The said tests were made at the Bureau of Standards in April, 1921 by the plaintiff Duncan and his assistant Samuel Isler and were prior to any date of conception of the invention alleged by the interference parties Lowell, et al., and Blatterman and were prior to the filing date of the interference party Pupin who filed his application for patent involved in Interference No. 53,154 only on February 4, 1924 and on whose behalf no priority testimony was taken and whose patent No. 1,571,456, filed December 31, 1915, upon which said Pupin relied, does not disclose the invention.

9. The plaintiff Duncan on or about October 20, 1923, his invention then having been proved commercially, filed an application for patent on said invention, Serial No. 669,662, said application having been made in all respects in strict and full accordance with the statutes of the United States and the rules of practice of the Patent Office relating to such applications. And he does not know and does not believe that the said invention was ever known or used by others in this country or patented or described in any printed publication in this or any foreign country prior to his invention or discovery thereof or more than two years

prior to his application for patent or patented in any foreign country on an application filed more than twelve months prior to the filing of the application for patent, or in public use or on sale in this country for more than [fol. 152] two years prior to said application, and that he has not abandoned the invention to the public.

10. The plaintiff Wired Radio, Inc. is the owner of the said Duncan application and invention.

11. After filing his application for patent, the plaintiff Duncan, through his attorney, became aware of the Lowell and Dunmore patent referred to, copied certain claims thereof and the two interferences heretofore referred to resulted involving said claims 2, 20 and 21 of said Lowell and Dunmore patent.

12. All of said interference parties took priority testimony except the junior party Pupin. The plaintiff Robert D. Duncan, Jr. in testimony taken on his behalf furnished proof establishing the facts alleged herein and complied in all respects with the provisions of law governing interference proceedings.

13. In both of said interferences priority of invention was awarded to the party Lowell and Dunmore by the Board of Appeals in its decisions, both of which are dated July 25, 1931. The Examiner of Interferences (page 4, line 10) accorded to Duncan the early part of April as his date of conception as to count 1 of interference No. 53,155 (claim 20 of said Lowell and Dunmore patent). The Board of Appeals did not disturb this finding.

14. On November 4, 1931, the plaintiff Duncan petitioned the Board of Appeals for reconsideration of its decisions in both interferences on the ground that certain matters of his evidence, including plaintiff's subsequent commercial adoption of the invention, although theretofore urged by him, had been completely overlooked inasmuch as all decisions of the Patent Office were silent on the status of plaintiff's subsequent commercial adoption of the invention and other material matters of Duncan's evidence.

15. On November 30, 1931, the Board of Appeals denied said petitions for rehearing, stating that the petitions were

not filed until after the time for appeal for its decisions to the Court of Customs and Patent Appeals had expired.

16. On December 11, 1931, the plaintiff Duncan repetitioned the Board of Appeals in both interferences on the [fol. 153] ground that the limit of appeal by statute since 1927 does not expire until six (6) months after the decision of the Board of Appeals, and that the issue had not been met on material matters of evidence theretofore urged by Duncan in connection with the status of Duncan's commercial adoption of the invention, which repetition was denied by the Board of Appeals on January 20, 1932.

Therefore, plaintiffs pray that the plaintiff Duncan be declared to be the first, true and original inventor of the invention herein set forth and involved in said interferences Nos. 53,154 and 53,155, and that plaintiff Duncan be adjudged as entitled according to law to receive a patent for his said invention as specified in the following claims, which are claims 2, 20, 21 and 18, respectively, of said Lowell and Dunmore Patent No. 1,455,141.

2. In an apparatus for the reception of radio signals the combination of a source of signal energy, means for amplifying said signals, means for rectifying said signals, a source of alternating current for supplying power to said amplifying means, and means connected to said amplifying and rectifying means for eliminating the hum of said alternating current in said apparatus.

20. In an apparatus for receiving radio signals the combination of a source of signal energy, means for amplifying said energy, means for rectifying said energy, means for reproducing said energy, a source of alternating current for supplying power to said amplifying means, and means connected in circuit with said reproducing means for eliminating the hum of said alternating current in the reproducing means.

21. In an apparatus for the reception of radio signals the combination of a source of signal energy, a plurality of vacuum tubes having grid, filament and plate electrodes, a source of alternating current for supplying power to said tubes, a detector for rectifying said signal energy, circuits interconnecting said electrodes and said detector, fixed means in circuit with said grid electrodes and said plate electrodes, and variable means in circuit with said grid elec-

trodes, all of said means serving to eliminate the hum of the alternating current in said apparatus.

[fol. 154] 18. In an apparatus for the reception of radio signals the combination of a source of signal energy, a plurality of vacuum tubes having grid, filament and plate electrodes, a detector, circuits interconnecting said electrodes and said detector, a source of alternating current for supplying power to said circuits, and means connected in circuit with said grid and plate electrodes for eliminating the hum of the alternating current in said apparatus.

And that plaintiffs have such other relief as equity may deem just.

Wired Radio, Inc., by C. W. Hough, President. Robert D. Duncan, Jr. Philip S. McLean, Counsel for Plaintiffs. James F. Pierce, 1319 F. Street N. W., Washington, D. C. Telephone Metropolitan 1147, of Counsel.

O'N:P.

[fol. 155] ANSWER OF DEFENDANTS LOWELL AND DUNMORE —Filed 13 June, 1934

IN THE SUPREME COURT OF THE DISTRICT OF COLUMBIA

In Equity

No. 53,938

WIRED RADIO, INC., 60 Broadway, New York, New York—ROBERT D. DUNCAN, JR., East Orange, New Jersey, Plaintiffs,

vs.

PERCIVAL D. LOWELL, 8533 148th Street Jamaica, New York —FRANCIS W. DUNMORE, 3411 Rodman Street, Washington, D. C.—ALBERT S. BLATTERMAN, 1208 Wanamassa Drive, Asbury Park, New Jersey—WESTINGHOUSE ELECTRIC & MFG. Co., East Pittsburgh, Pennsylvania

To the Honorable Judges of the Supreme Court of the District of Columbia:

Now come the defendants, Percival D. Lowell and Francis W. Dunmore, and answer plaintiffs' bill of complaint insofar as it is directed against them as follows:

1. Defendant Francis W. Dunmore admits that he is a resident of Washington, D. C. Defendant Percival D. Lowell denies that he is a resident of New York. Defendants are not informed, save by said bill of complaint, as to the remaining allegations of paragraph 1 of the bill of complaint and leave the plaintiffs to their proof thereof.

[fol. 156] 2. Defendants admit that the bill of complaint purports to state a cause of action arising under Section 4915 of the Revised Statutes of the United States.

3. Defendants admit the allegations contained in paragraph 3 of the bill of complaint.

4. These defendants deny the allegations of paragraph 4 of the bill of complaint except that they admit that claim 2 of United States Letters Patent 1,455,141 granted May 15, 1923, to these defendants is the sole count of Patent Office Interference No. 53,154 involving the four (4) interference parties Pupin, Duncan, Lowell and Dunmore, and Blatterman, and claims 20 and 21 of said patent are counts 1 and 2, respectively, of interference No. 53,155 involving the two (2) interference parties Duncan and Lowell and Dunmore.

5. These defendants deny the allegations of paragraph 5 of the bill of complaint and deny that the claims of said patent 1,455,141 are limited in any manner other than expressed in the claims and specification.

6. These defendants deny the allegations of paragraph 6 of the bill of complaint except that they admit that United States Letters Patent 1,455,141 were issued to these defendants Lowell and Dunmore.

7. Defendants deny each and every one of the allegations of numbered paragraph 7 of plaintiffs' bill of complaint.

8. Defendants deny the allegations of numbered paragraph 8 of plaintiffs' bill of complaint except that defendants admit that the party Michael I. Pupin filed his application on February 4, 1924, and took no priority testimony and that the Pupin patent 1,571,456, based on application filed December 31, 1915, upon which said Pupin relied for priority, does not disclose the invention.

9. Defendants admit the filing of an application for Letters patent in the United States Patent Office on Octo-

ber 20, 1923, by Robert D. Duncan, Jr., which was given a Serial No. 669,662, but defendants deny each and every other of the allegations in paragraph numbered 9 of plaintiff's bill of complaint.

10. Defendants deny the allegations of paragraph 10 and allege upon information and belief that the Duncan [fol. 157] application and invention is owned by others than Wired Radio, Inc., to wit, the Federal Telegraph Company, a corporation organized and existing under the laws of the State of California.

11. These defendants are not informed as to the allegations of paragraph 11 of the bill of complaint and leave plaintiffs to make proof thereof except that they admit that the interferences declared between said application of plaintiff Duncan and said patent of these defendants Lowell and Dunmore embraced claims 2, 20 and 21 of said patent.

12. Answering paragraph 12, defendants admit that all of the said interference parties took priority testimony except the junior party Pupin. Defendants deny all of the other allegations contained in paragraph 12 of the bill of complaint.

13. Answering paragraph 13, defendants admit that priority of invention was awarded to Lowell and Dunmore and allege that what the tribunals found is stated in their opinions profert of which is hereby made.

14. These defendants deny the allegations of paragraph 14 of the bill of complaint except that they admit plaintiff Duncan on or about November 4, 1931 filed petitions before the Board of Appeals for reconsideration of its decisions in both said interferences.

15. These defendants deny the allegations of paragraph 15 of the bill of complaint except that they admit that on or about November 30, 1931, the Board of Appeals denied said petitions for rehearing. Profert of the decisions of the Board of Appeals is hereby made.

16. These defendants deny the allegations of paragraph 16 of the bill of complaint except that they admit that on or about December 11, 1931, plaintiff Duncan filed petitions before the Board of Appeals in both said interfer-

ences and that the Board of Appeals denied said petitions on or about January 20, 1932. Profert of the decisions of the Board of Appeals is hereby made.

17. Further answering these defendants state upon information and belief that claim 18 of said patent 1,455,141 was upon motion of these defendants dissolved from the issue of interference proceedings No. 53,154 by a decision [fol. 158] of the Law Examiner of the United States Patent Office on or about July 2, 1926, and no appeal from said decision was filed by or on behalf of plaintiff Duncan.

18. Further answering defendants aver, upon information and belief, that if said Duncan ever conceived the invention or inventions expressed in the claims enumerated in the bill of complaint or any of them, which defendants deny, he, nevertheless, failed to use due diligence as required by law, or any diligence at all, in adapting or perfecting the same or in reducing the same to practice or in filing his aforesaid application for patent therefor; and that in fact, he never did adapt or perfect the same or reduce the same to practice and that said alleged invention or inventions amounted to nothing more than an unsuccessful experiment or experiments.

19. Further answering, defendants state, upon information and belief, that at the time of the filing of their application for Patent, Serial No. 547,111, on March 27, 1922, referred to in the bill of complaint, they were the original, first, and joint inventors of the invention therein set forth and were and are entitled to a patent therefor, and that the application was duly filed and complied in all respects with the requirements of law in such cases made and provided, and that subsequently proceedings were had thereon in the Patent Office in all respects in accordance with the procedure prescribed by law and Letters Patent 1,455,141, were duly and regularly issued May 15, 1923, to the defendants in accordance with the procedure prescribed by law.

20. That the defendants Percival D. Lowell and Francis W. Dunmore duly presented to the Commissioner of Patents full and sufficient proof establishing that they were the true, original and joint inventors of the subject matter of the interferences referred to in the bill of com-

plaint and that they made the said invention prior to any date of invention which can be established by the plaintiff Robert D. Duncan, Jr., or either of the applicants Michael I. Pupin or Albert S. Blatterman, the other parties to the interferences referred to in paragraph 4 of the bill of complaint.

21. That with respect to the counts of interferences 53,154 and 53,155, Lowell and Dunmore conceived the invention set forth in the said counts on or about the twenty-[fol. 159] eighth day of September, 1921; that on or about the seventh day of October, 1921, the first drawings of the invention were made; that on or about the seventh day of October, 1921 they first explained the invention to others; that on or about the seventh day of October, 1921 the first written description of the invention was made; that they first embodied their invention in a full size radio receiving apparatus which was completed on or about the seventh day of October, 1921; that on or about the seventh day of October, 1921, the said receiving apparatus was first successfully operated at Washington, in the District of Columbia, that they have since continued to use the invention and have manufactured devices embodying said invention in many thousands.

Wherefore defendants allege that the decision of the Board of Appeals of the United States Patent Office in awarding priority of invention to defendants, was right and that the plaintiff is not entitled to the relief prayed for in the bill, nor to any relief and defendants pray this Court that the bill of complaint be dismissed with costs.

Francis W. Dunmore, Percival D. Lowell, by John B. Brady, Solicitor for Defendants.

City of Washington,
District of Columbia, ss:

Francis W. Dunmore and Percival D. Lowell, being duly sworn, depose and say that they are the defendants in this suit, that they have read the foregoing answer to the bill of complaint in this suit and know the contents thereof and that the same is true to their own knowledge except as to the matters therein stated to be alleged upon information and belief and that as to those matters they believe it to be true.

Francis W. Dunmore. Percival D. Lowell.

Sworn to and subscribed before me this 29th day of February, 1932.

Mary M. Devlin, Notary Public, D. C.

[fol. 160] (Copy)

IN THE SUPREME COURT OF THE DISTRICT OF COLUMBIA

In Equity

No. 53937

ALBERT S. BLATTERMAN, Plaintiff,

vs.

PERCIVAL D. LOWELL et al., Defendants

The President of the United States to Francis W. Dunmore, 3411 Rodman Street, N. W., Washington, D. C., Defendant—*Greeting:*

You are hereby commanded to appear before the Supreme Court of the District of Columbia to answer a bill of complaint (or petition) exhibited against you in the said Court in a suit in Equity by the above-named plaintiff, and to further do and receive what the said Court shall have considered in this behalf; and hereof fail not.

Witness, the Honorable Chief Justice of said Court the 23rd day of Jan., A. D. 1932.

Frank E. Cunningham, Clerk, by H. B. Dertzbaugh, Assistant Clerk. (Seal.)

——— ———, Attorney.

Note.—The defendant is required to file his answer or other defense in the Clerk's office on or before the twentieth day after service, excluding the day thereof; otherwise, the bill may be taken pro confesso.

[fol. 161] IN THE SUPREME COURT OF THE DISTRICT OF COLUMBIA

In Equity

No. 53937

Action under 4915 U. S. Revised Statutes

ALBERT S. BLATTERMAN, 1304 Wanamassa Drive, Asbury Park, New Jersey, Plaintiff,

vs.

PERCIVAL D. LOWELL and FRANCIS W. DUNMORE, Defendants

BILL OF COMPLAINT

For issuance of Letters Patent

To the Honorable Judges of the Supreme Court of the District of Columbia:

Albert S. Blatterman, a citizen of the United States, and a resident of Asbury Park, County of Monmouth, and State of New Jersey, and a citizen of said State, plaintiff, brings this, his bill of complaint against Percival D. Lowell and Francis W. Dunmore, joint patentees of United States Patent No. 1,455,141, issued May 15, 1923, said Percival D. Lowell and Francis W. Dunmore, defendants, being residents of the District of Columbia and whose post-office addresses are, respectively, Airways Division, Department of Commerce, Washington, D. C., and 3411 Rodman Street, N. W., Washington, D. C.

Plaintiff, for his cause of action, brings this bill of complaint and alleges:

(I) That this is a suit in equity brought under the patent laws of the United States and jurisdiction of this Court depends upon Section 4915 R. S., as amended by the Act of March 2, 1927, 44 Stat. L. 1335, and Section 52 of the Judicial Code, Act of March 3, 1927, 44 Stat. L. 1394.

(II) That heretofore, and before about November 28, 1921, the plaintiff, Albert S. Blatterman, was the true, original, first and sole inventor of certain new and useful im-

[fol. 162] provements in a System for Radio Frequency Amplification, not known or used by others in this country, before his invention or discovery thereof, nor patented nor described in any printed publication in this or any foreign country, before his invention or discovery thereof, or more than two years prior to his application and not in public use or on sale in this country for more than two years prior to his application, not abandoned, and not patented in any foreign country on an application filed by him or his legal representatives or assigns more than twelve months prior to his application in the United States, and that no application for patent on said improvement has been filed by him or his representatives or assigns in any country foreign to the United States.

(III) That being, as stated, the original, first, and sole inventor of the said invention and entitled to a patent therefor, the said Albert S. Blatterman on or about the 10th day of March, 1922, duly filed in the United States Patent Office an application for Letters Patent on said invention, said application complying in all respects with the requirements of the law in such cases made and provided. That said application was given a filing date of March 10, 1922, and Serial No. 542,525, and after the examination required by law and other due proceedings had, the Commissioner of Patents on or about July 10, 1924, adjudged that the invention described and claimed in the said application for Letters Patent in part interfered with certain other pending applications, namely, an application for patent of the defendants, Percival D. Lowell and Francis W. Dunmore, filed March 27, 1922, Serial No. 547,111 and patented on May 15, 1923, under No. 1,455,141; and an application of Michael I. Pupin, filed February 4, 1923, Serial No. 690,586, entitled Supply System for Vacuum Tubes; and an application of Robert D. Duncan, Jr., filed October 20, 1923, Serial No. 669,662, the subject matter being defined by the Commissioner of Patents in the following interferences:

Interference No. 51,204, Lowell and Dunmore v. Blatterman, on the following counts:

In an apparatus for the reception of radio signals, the combination of a source of signal energy, a plurality of vacuum tubes having grid, filament and plate electrodes, [fol. 163] a detector, circuits interconnecting said electrodes and said detector, a transformer having a primary

winding connected to a source of alternating current, secondary windings, a two electrode valve rectifier having a filament and a plate, connections between one of said secondary windings and the filament of said rectifier, connections between another of said secondary windings and said rectifier whereby direct current is supplied to the plate circuits of said vacuum tubes, another of said secondary windings connected to supply heating current to the filaments of said vacuum tubes and a capacity and resistance connected in said plate circuits for eliminating the hum of said alternating current in said apparatus.

In an apparatus for receiving radio signals the combination of a source of signal energy, means for amplifying said energy, means for rectifying said energy, a source of alternating current for supplying power to said amplifying means, means for rectifying said current, and a plurality of separate means connected in circuit with said rectifying means for smoothing out the rectified current and supplying power to said amplifying means.

In an apparatus for the reception of radio signals the combination of a source of signal energy, a plurality of vacuum tubes having grid, filament and plate electrodes, a detector, circuits interconnecting said electrodes and said detector, a source of alternating current for supplying power to said circuits, and means connected in circuit with said grid and plate electrodes for eliminating the hum of alternating current in said apparatus.

Interference No. 51,702, Pupin v. Lowell and Dunmore v. Blatterman, the issue comprising the following counts:

In an apparatus for receiving radio signals, the combination of a source of signal energy, means for amplifying said energy, means for rectifying said energy, and a source of alternating current for supplying power to said amplifying means, and a plurality of means in circuit with said amplifying means for eliminating the hum of said alternating current in said apparatus.

In an apparatus for receiving radio signals the combination of a source of signal energy, means for amplifying [fol. 164] said energy, means for rectifying said energy, a source of alternating current for supplying power to said amplifying means, means for rectifying said current and

a plurality of separate means connected in circuit with said rectifying means for smoothing out the rectified current and supplying power to said amplifying means.

Interference No. 53,154, Pupin v. Duncan v. Lowell and Dunmore v. Blatterman, involving the following count:

In an apparatus for the reception of radio signals the combination of a source of signal energy, means for amplifying said signals, means for rectifying said signals, a source of alternating current for supplying power to said amplifying means, and means connected to said amplifying and rectifying means for eliminating the hum of said alternating current in said apparatus.

(IV) That the plaintiff, Albert S. Blatterman is the owner of the entire right, title and interest in and to the invention shown and described in his application for patent, Serial No. 542,525, filed March 10, 1922.

(V) That the said plaintiff duly presented to the Commissioner of Patents, as required by law, full and sufficient proof establishing the fact that the said Albert S. Blatterman, as heretofore alleged, was the true, original, and first inventor of the improvements constituting the subject matter of said interferences and after due proceedings had, including the presentation of evidence by the other applicants involved in said interference, the Commissioner of Patents by the Examiner of Interferences denied priority of invention in the interference issues to the said Albert S. Blatterman, and awarded priority of invention in the aforesaid interferences to Lowell and Dunmore.

(VI) That thereupon an appeal was taken by the said Albert S. Blatterman from the decision of the Examiner of Interferences to the Board of Appeals of the United States Patent Office, and said Board of Appeals, after hearing the said appeal erroneously, as plaintiff submits, awarded priority of invention of the issues in said interferences to the Defendants, Percival D. Lowell and Francis W. Dunmore, and refused a patent to the plaintiff upon his application aforesaid, as will more fully and at large appear [fol. 165] from duly authenticated records in Courts to be produced of the said application of Albert S. Blatterman and of the aforesaid proceedings in the Patent Office.

Wherefore, the plaintiff brings this suit in equity under and in accordance with the provision of the aforesaid statute in such cases made and provided, and prays this Honorable Court:

(1) To adjudge and decree that the plaintiff, Albert S. Blatterman, is the true, original and first inventor of the subject matter of the said interferences, and is entitled to receive Letters Patent of the United States for such invention.

(2) To authorize and direct the Commissioner of Patents to issue a patent on the above designated application of Albert S. Blatterman including the subject matter of the said interferences.

(3) For costs and such other relief in the premises as the nature of the case and the equities flowing to the plaintiff may require.

Albert S. Blatterman. David P. Wolhaupter, 700-10 St. N. W., Washington, D. C. Counsel and Solicitor for Plaintiff.

STATE OF NEW JERSEY,
County of Monmouth, ss:

On January 22, 1932, at Asbury Park, New Jersey, before me, a notary public in and for the county and State aforesaid, personally appeared Albert S. Blatterman, who, being duly sworn, testified that he is the plaintiff named in the foregoing bill of complaint; that he signed the same in his own behalf; and that he has read the bill of complaint and the allegations thereof are believed to be true.

A. D. Courett, Notary Public of N. J. (Seal.)

[fol. 166] ANSWER—Filed 13 June, 1934

IN THE SUPREME COURT OF THE DISTRICT OF COLUMBIA

In Equity

No. 53,937

Action Under 4915 U. S. Revised Statutes

ALBERT S. BLATTERMAN, Plaintiff,

vs.

PERCIVAL D. LOWELL and FRANCIS W. DUNMORE, Defendants

To the Honorable Judges of the Supreme Court of the District of Columbia:

Now come the defendants above named and answer plaintiff's bill of complaint as follows:

Defendants are not informed as to the allegations of the first paragraph of the bill of complaint and leave plaintiff to make proof thereof except that they admit that Percival D. Lowell and Francis W. Dunmore are joint patentees of U. S. Letters Patent No. 1,455,141, issued May 15, 1923, and that the said Percival D. Lowell is a resident of the District of Columbia and has a postoffice address at Airways Division, Department of Commerce, Washington, D. C., and Francis W. Dunmore is a resident of the District of Columbia and has a postoffice address at 3411 Rodman Street, N. W., Washington, D. C.

I. Defendants admit that the bill of complaint purports to state a cause of action arising under Section 4915 of the Revised Statutes of the United States.

II. Defendants deny the allegations of numbered paragraph (II) of the plaintiff's bill of complaint.

III. Defendants deny the allegations of paragraph III of the bill of complaint except that they admit that plaintiff on or about March 10, 1922, filed in the United States Patent Office an application for Letters Patent which was given Serial No. 542,525 and the Commissioner of Patents on or about July 10, 1924, declared an interference between said application and U. S. Letters Patent 1,455,141, issued to

[fol. 167] defendants on May 15, 1923, and an application of one Michael I. Pupin, filed on or about February 4, 1923, Serial No. 690,586 and an application of Robert D. Duncan, Jr., filed on or about October 20, 1923, serial No. 669,662 with respect to the subject matter as stated in the amended bill of complaint and said interference was designated by the Commissioner of Patents as Interference No. 61,204; and the Commissioner of Patents on or about November 14, 1924 declared a further interference between aforesaid application of plaintiff and aforesaid application of Pupin and aforesaid patent of defendants with respect to the subject matter as stated in the bill of complaint and said interference was designated by the Commissioner of Patents as Interference No. 51,702; and the Commissioner of Patents on or about December 8, 1925, declared a further interference between aforesaid application of plaintiff and aforesaid application of Pupin and aforesaid application of Robert D. Duncan, Jr., and aforesaid patent of defendants with respect to the subject matter as stated in the bill of complaint, and said interference was designated by the Commissioner of Patents as Interference No. 53,154.

IV. Defendants are not informed as to the allegations of paragraph (IV) of the bill of complaint and leave plaintiff to make proof thereof.

V. Defendants deny the allegations of paragraph (V) of the Bill of Complaint except that they admit that the Commissioner of Patents by the Examiner of Interferences after due proceedings had, including the presentation of priority testimony and evidence on behalf of each party except the said Pupin, denied priority of invention in the interference issues to the said Albert S. Blatterman and awarded priority of invention in the aforesaid interferences to Lowell and Dunmore as will more fully appear from the said decisions, profert of which is hereby made.

VI. Defendants deny the allegations of paragraph (VI) of the bill of complaint except that they admit that an appeal was taken by the said Albert S. Blatterman from the decision of the Examiner of Interferences to the Board of Appeals of the United States Patent Office and said Board of Appeals after hearing said appeal affirmed the decision of the Examiner of Interferences and awarded [fol. 168] priority of invention of the issues in said inter-

ferences to the defendants Percival D. Lowell and Francis W. Dunmore and refused a patent to the plaintiff for the subject matter of said interferences, as will more fully appear from the said decisions profert of which is hereby made.

VII. Further answering defendants aver, upon information and belief, that if said Albert S. Blatterman ever conceived the invention or inventions on the dates alleged, as expressed in the claims enumerated in the bill of complaint or any of them, which defendants deny, he, nevertheless, failed to use due diligence as required by law, or any diligence at all, in adapting or perfecting the same or in reducing the same to practice or in filing his aforesaid application for patent therefor. And that, in fact, he never did adapt or perfect the same or reduce the same to practice; and that said alleged invention or inventions amounted to nothing more than an unsuccessful experiment or experiments; and that said Albert S. Blatterman wholly abandoned the same; and that any and every alleged invention by said Albert S. Blatterman set forth in the bill of complaint was abandoned by him before his application for Letters Patent therefor.

VIII. Further answering, defendants state, upon information and belief that at the time of the filing of their application for patent, Serial No. 547,111 on March 27, 1922, referred to in paragraph (III) of the bill of complaint, they were the original, first and joint inventors of the invention therein set forth and were and are entitled to a patent therefor, and that the application was duly filed and complied in all respects with the requirements of law in such cases made and provided, and that subsequently proceedings were had thereon in the Patent Office in all respects in accordance with the procedure prescribed by law and Letters Patent 1,455,141 were duly and regularly issued May 15, 1923, to the defendants in accordance with the procedure prescribed by law.

IX. That the defendants Percival D. Lowell and Francis W. Dunmore duly presented to the Commissioner of Patents full and sufficient proof establishing that they were the true, original and joint inventors of the subject matter [fol. 169] of the interferences referred to in paragraph (III) of the bill of complaint and that they made the said

invention prior to any date of invention which can be established by the plaintiff Albert S. Blatterman, or either of the applicants Michael I. Pupin or Robert D. Duncan, Jr., the other parties to the interferences referred to in paragraph (III) of the bill.

X. That with respect to the count of interference No. 53,154, (claim 3 of patent 1,455,141) Pupin v. Duncan v. Lowell and Dunmore v. Blatterman; Count 2 of interference 51,702, (claim 1 of patent 1,455,141), Pupin v. Lowell and Dunmore v. Blatterman; Count 3 of interference 51,204 (claim 18 of patent 1,455,141), Lowell and Dunmore v. Blatterman; Lowell and Dunmore conceived the invention set forth in the said counts on or about the twenty-eighth day of September, 1921; that on or about the seventh day of October, 1921, the first drawings of the invention were made; that on or about the seventh day of October, 1921, they first explained the invention to others; that on or about the seventh day of October, 1921, the first written description of the invention was made; that they first embodied their invention in a full size radio receiving apparatus which was completed on or about the seventh day of October, 1921; that on or about the seventh day of October, 1921, the said receiving apparatus was first successfully operated at Washington in the District of Columbia; that they have since continued to use the invention and have manufactured devices embodying said invention in many thousands; that with respect to the remaining counts of interferences 51,204 and 51,702, set forth in the amended bill of complaint, Lowell and Dunmore conceived the invention set forth in counts 1 and 2 of interference 51,204 (claims 15 and 19 of patent 1,455,141) on or about the first day of October, 1921; that they conceived the invention set forth in count 1 of interference 51,702 (claim 16 of patent 1,455,141) on or about September 28, 1921; that with respect to counts 1 and 2 of interference 51,204 and count 1 of interference 51,702, they first made drawings of the invention on or about October 7, December 8, and December 10, 1921; that on or about December 8, 1921, the first written description of the invention was made; that on or about the seventh day of October, 1921, they first explained their invention to others; [fol. 170] that they first embodied their invention in a full size radio receiving apparatus which was completed on the tenth day of December, 1921; that on or about the tenth

day of December, 1921, the said radio receiving apparatus was first successfully operated at Washington, District of Columbia; that they have since continued to use the invention and have manufactured devices embodying said invention in many thousands.

Wherefore defendants allege that the decision of the Board of Appeals of the United States Patent Office in awarding priority to defendants was right and that the plaintiff is not entitled to the relief prayed for in the bill, nor to any relief and defendants pray this Court that the bill of complaint be dismissed with costs.

Francis W. Dunmore, Percival D. Lowell, by John B. Brady, Solicitor for Defendants.

City of Washington,
District of Columbia, ss:

Francis W. Dunmore and Percival D. Lowell, being duly sworn, depose and say that they are the defendants in this suit, that they have read the foregoing answer to the bill of complaint in this suit and know the contents thereof and that the same is true to their own knowledge except as to the matters therein stated to be alleged upon information and belief and that as to those matters they believe it to be true.

Francis W. Dunmore. Percival D. Lowell.

Sworn to and subscribed before me this 29th day of February, 1932.

Mary M. Devlin, Notary Public, D. C.

[fol. 171] Plaintiffs' Exhibit No. 4

Exclusive License Agreement

Memorandum of Agreement, made and entered into this 20th day of October, 1924, by and between Dubilier Condenser & Radio Corporation, a corporation of the State of Delaware, having a place of business at 48 West Fourth Street, City, County and State of New York, (hereinafter called Dubilier), and Francis W. Dunmore and Percival D. Lowell, whose address is c/o John B. Brady, Ouray Build-

ing, Washington, D. C., (hereinafter called the Inventors), witnesseth:

Whereas, the Inventors have made certain inventions relating to Electron Tube Radio Receiving Apparatus wherein circuits of the Electron Tubes are supplied from the ordinary house lighting current without the employment of primary or secondary batteries, for which they have obtained United States Letters Patent No. 1,455,141, dated May 15, 1923 and entitled Radio Receiving Apparatus; and

Whereas, Dubilier is desirous of acquiring an exclusive license to manufacture, use and sell the aforesaid invention, such modifications thereof and improvements thereon as the Inventors have heretofore made or may hereafter make, together with the right to control all future licenses that may be granted as hereinafter more fully set forth:

(X) Now, therefore, for and in consideration of the premises and the covenants hereinafter cited and to be faithfully performed, and the sum of Five Thousand ($5000.00) Dollars by Dubilier to the Inventors in hand paid as advance royalties, the receipt of which is hereby acknowledged, it is understood and agreed as follows:

1. The Inventors covenant that they are the sole and exclusive owner of the aforesaid invention, modifications and improvements thereof, and the patent covering the same, and that they have the full right to enter into this agreement, except for the following licenses, true copies of which are annexed hereto and form part hereof:

[fol. 172] (a) Non-exclusive, personal, non-transferable license to the Timmons Radio Products Company.

(b) Non-exclusive, personal, non-transferable license to the United States Government for Governmental purposes only.

2. The Inventors further reserve to themselves the right to grant the following licenses, it being understood and agreed, however, that the said licenses and each of them shall contain the following clause:

(Y) This license is granted and this agreement entered into with the express understanding that all fixed con-

densers used in the manufacture of apparatus under the aforesaid patent shall be purchased from Dubilier Condenser & Radio Corporation, 48 West Fourth Street, New York, and violation of this covenant will render this contract null and void and all rights granted by licensors to licensee shall be discontinued.

Each license shall also be granted only upon the payment of the initial sum mentioned below in the nature of advance royalty and with the royalty per device fixed, as stated:

(a) A non-exclusive, personal, non-transferable license to the Pathe Phonograph & Radio Corporation, upon the payment of One Thousand ($1000) Dollars advance royalty and a specific royalty of Fifty Cents (50c) per device.

(b) A non-exclusive, personal, non-transferable license limited to the use of the invention only in connection with time clock mechanisms to the International Time Recording Company upon payment of Five Hundred ($500) Dollars advance royalties and a specific royalty of One ($1.00) Dollar per device. Broadcasting reception expressly excluded.

(c) A non-exclusive, personal, non-transferable license to C. Brandes, Inc., upon payment of One Thousand ($1,000) Dollars advance royalties, and a specific royalty of Fifty Cents (50c) per device.

(d) A non-exclusive, personal, non-transferable license for use of the invention only in connection with wired wireless to Wired Radio, Inc., upon payment of One Thousand [fol. 173] ($1,000) Dollars advance royalty and a specific royalty of Fifty Cents (50c) per device. Regular Broadcasting reception expressly excluded.

3. The Inventors hereby covenant and agree that copies of the foregoing licenses shall be submitted to Dubilier before the execution thereof and if said licenses are entered into, the Inventors further covenant and agree that upon failure of their licensees to comply with the clause relating to the purchase by said licensees of condensers from Dubilier, that the Inventors will forthwith revoke said licenses unless the same are continued by written permission so to do to the Inventors from Dubilier.

4. It is mutually understood and agreed that should any licensee under the said patent No. 1,455,141 be sued, or threatened with suit under letters patent held by an adversary, that the Inventors and Dubilier each shall have the independent right to grant a free, non-exclusive license to such adversary in consideration of a similar license under said adversary's patent, or upon such other terms as the parties hereto mutually agree upon; it being expressly agreed, however, that each party shall keep the other fully informed in the matter, and that each shall safeguard the other, the intent and purpose of this covenant being to provide that all licensees shall be maintained immune from damages arising out of any attack for infringement insofar as the Inventors and Dubilier may be able to quiet said attack by licensing the adversary.

5. Subject to the foregoing licenses and rights, the Inventors hereby give and grant to Dubilier, its successors and assigns, the exclusive right to manufacture, use and sell and to grant to others the right to manufacture, use and sell the aforesaid invention and any and all modifications thereof and improvements thereon that they have heretofore made or may hereafter make throughout the United States, its territories and Dependencies, and covenant to grant to Dubilier, or its nominee or nominees, the exclusive right to manufacture, use and sell, and to grant to others the right to manufacture, use and sell said invention, modification and improvement in each and every foreign country where such invention or improvement, or both, may be covered by letters patent.

[fol. 174] 6. The Inventors, during the life of this agreement, shall promptly file and diligently prosecute at their own expense any reissue of said United States Letters Patent, as the said Inventors and Dubilier may agree are necessary and desirable to adequately protect the said invention. The Inventors will keep Dubilier informed respecting all proceedings in the United States Patent Office in connection with said reissue, interference or any other proceeding that may therein arise and to consult Dubilier before taking any action that may detrimentally affect its interests.

7. Dubilier shall bear the expense of filing and prosecuting any applications for letters patent upon the aforesaid

invention, modification and improvement, as it may elect to file in foreign countries and the expense of maintenance of all letters patent that may be granted upon such applications, and hereby agrees to give to the Inventors timely written notice as to all foreign countries in which it elects to file applications for letters patent.

8. The Inventors shall execute all papers that may be necessary or desirable to enable Dubilier, or its nominee or nominees, to file and prosecute applications for letters patent in all countries in which Dubilier shall elect to secure patent protection for said invention, and to prosecute all suits thereunder.

9. Dubilier covenants to pay to the Inventors during the life of this agreement the following royalties:

(A) Fifty Cents per apparatus or device, until a total of Five Thousand ($5000) Dollars has been credited by the Inventors to Dubilier, this covering the Five Thousand ($5000) Dollars advance royalty paid as consideration for the making of this agreement (paragraph X, page 1 hereof).

(B) Fifty Cents per apparatus or device, until a total of Ten Thousand ($10,000) Dollars has been paid.

(C) On the next succeeding 60,000 devices, a royalty of twenty-five cents (25c) each.

(D) On the next succeeding 100,000 devices, a royalty of twenty cents (20c) each.

(E) On the next succeeding 200,000 devices, a royalty of fifteen cents (15c) each.

[fol. 175] (F) On all devices thereafter, a royalty of ten cents (10c) each.

10. Dubilier further covenants to pay to the Inventors any sum or sums of money that may accrue to Dubilier from any license hereafter granted by Dubilier in accordance with the provisions of this agreement, said sum to apply on the Ten Thousand ($10,000) Dollars payment specified in paragraph 9 B above. At any time the payment of said Ten Thousand ($10,000) Dollars is liquidated by Dubilier by monies accruing from sub-licensees or otherwise, then the royalty of fifty cents (50c) per device mentioned in said paragraph 9 B, shall be discontinued and the royalties there-

after accruing to Dubilier from licensees shall be divided as provided in paragraph 22 hereof.

11. Should this agreement be terminated for any cause whatsoever prior to the expiration of the patent mentioned herein, Dubilier covenants and agrees to assign to said Inventors any and all outstanding licenses it may have granted hereunder, and shall not thereafter be liable to said Inventors for any royalties due by said licenses after the date of said assignment.

12. For the purpose of determining the amount of royalties, the terms "apparatus" and "device" used herein are understood to refer to and include the following:

(a) A device for supplying filament current to radio receiving sets, replacing the usual A battery.

(b) A device for supplying plate current to radio receiving sets, replacing the usual B battery.

(c) A combination device for supplying both A and B battery for radio receiving sets.

(d) Apparatus embodying either (a), (b), or (c).

13. Only one royalty payment shall be made on account of a single complete apparatus or device and Dubilier shall not be liable for royalties upon any apparatus returned by purchasers for credit and shall have the right to deduct the amount of any such royalties already paid from the amount of the royalties that may subsequently accrue. No royalty shall be paid on the parts of apparatus that are sold as repairs or furnished as replacements.

[fol. 176] 14. In case the royalties accruing to the Inventors upon apparatus or devices manufactured and sold or used by Dubilier and its nominees or licensees during any calendar year of the life of this agreement shall not amount to Five Thousand ($5000) Dollars, or in case Dubilier otherwise fails to perform any of its obligations herein prescribed, the Inventors shall have the right upon sixty days' written notice by registered mail delivered to Dubilier, to terminate this agreement, it being understood that Dubilier shall be liable for all royalties that may have accrued prior to the date of actual termination of the agreement. However, if the said notice is given because the roy-

alties accrued and paid do not amount to the above specified sum, Dubilier may after receipt of such notice continue this agreement in full force and effect by making good the deficiency prior to the expiration of the said period of sixty days.

15. Dubilier covenants to pay the royalties due under this agreement to the Inventors in semi-annual payments on June thirtieth and January thirtieth, the said payments to include all royalties due and payable up to within thirty days of the said dates.

16. Dubilier shall keep and shall require its nominees and licensees to keep proper books of account with reference to all apparatus which it or they may manufacture and sell, embodying the aforesaid invention, modifications and improvements and shall render semi-annual statements or extracts from said books to the Inventors showing the total amount of such apparatus as may have been manufactured and sold during the preceding royalty period and the amount of royalties payable to the Inventors, the said statements to be rendered at the time of making the royalty payments designated in paragraph 15 hereof. Dubilier shall, when requested by the Inventors so to do, verify the said statements by affidavits and shall also permit and require its nominees and licensees to permit the Inventors, through a certified public accountant, to inspect such books of account and to make extracts therefrom at reasonable times, said accountant to be paid by the Inventor.

17. Dubilier shall use every reasonable endeavor to mark and to have its nominees and licensees mark all apparatus covered by the aforesaid patent and any others that may come within the scope of this agreement which is manu- [fol. 177] factured and sold by it or them with the dates thereof.

18. The Inventors hereby agree, subject to the direction and approval of Dubilier, to conduct such proceedings as may be considered necessary and desirable to enforce the said United States Letters Patent against alleged infringers and for this purpose, it is mutually agreed that John B. Brady, Esq., of Washington, D. C., shall be appointed a trustee to receive a trust fund consisting of ten per cent (10%) of all monies received by the said Inventors from

all sources arising out of the licensing of said United States Letters Patent, which they hereby agree to pay into said Brady, the same to be used as a fund for the legal expenses incident to the defense of suits that may be brought by others against Dubilier or the Inventors, or both of them, or their respective licensees, and also for the purpose of paying the necessary and proper legal expenses incident to the prosecution of infringers of the said patents it being understood that all expenses shall be paid out of the said fund and in the event that the said fund is insufficient, then the Inventor and Dubilier shall divide the said expenses equally between them provided they mutually so consent to do.

It is also mutually understood and agreed that when the said trust fund shall total the sum of Five Thousand ($5000) Dollars that payments into the same may be discontinued, to be resumed when necessary to re-establish the aforesaid account.

It is further mutually understood and agreed that the said trust fund may at any time be used for any purpose mutually agreed upon by the parties hereto.

19. The Inventors hereby give and grant to Dubilier the right to sue in its own name and at its own expense any infringers of said patent or patents and to collect for its own use and behoof such damages and profits as may be assessed as the result of such suit or suits, provided, however, that in all cases where the Inventors wish to join in any suit or suits they shall have the right so to do, in which event the expenses shall be paid out of said trust fund and Dubilier and the Inventors shall then share equally in the division of all monies received, as damages or profits that may be collected.

[fol. 178] 20. The Inventors hereby specifically grant to Dubilier the right to grant sub-licenses to others under the aforesaid patent, or any other patents that may come within the scope of this agreement, it being understood that Dubilier shall have the right to insert in said licenses, if it so desires, a paragraph similar to that of paragraph 2Y hereof, requiring use by the licensee of Dubilier condensers.

(a) It is also agreed that Dubilier shall have the right to include the total number of devices made by Dubilier

licensees, with the total number of devices made by Dubilier, in computing the total number of devices for the purpose of making royalty payments thereon, as specified in paragraph 9 hereof.

21. Dubilier hereby covenants and agrees to pay to the Inventors one-half of all sums received from any license that may be granted by Dubilier, it being mutually understood and agreed that the Inventors shall pay into the trust fund, paragraph 18 above, ten percent of all such money received from Dubilier as well as ten percent of all monies received from Dubilier as royalties from the manufacture and/or sale of apparatus.

22. Dubilier hereby covenants and agrees to pay into the trust fund as set forth in paragraph 18 hereof, ten percent of all monies received from sub-licensees, the following procedure being mutually agreed upon in this connection:

(a) Dubilier or its nominees shall collect royalties due under all licenses granted by Dubilier.

(b) The said royalties so collected shall be divided equally between Dubilier and the Inventors.

(c) Dubilier shall pay ten percent of the amount received to the trust fund, paragraph 18 hereof.

(d) The Inventors shall pay ten percent to the trust fund, paragraph 18 hereof.

23. If, as a result of court decisions substantial protection for the main subject-matter of this agreement is not afforded by said patent or if adversely held patents are declared to prevent manufacture of devices under said patent, Dubilier may terminate this agreement if it shall so elect.

[fol. 179] 24. In case of the termination of this agreement, for any cause whatsoever, all rights and obligations of the parties hereunder shall cease and their original rights of prosecution and defense of infringement suits shall be restored.

25. If any controversy shall arise between the parties as to the performance of any obligation under this agreement, the matter in controversy shall be submitted, at the

option of either party, to three arbitrators who shall have power to decide the matter in controversy, and to determine what, if any, amount shall be paid by either party to the other as liquidated damages for any breach of this agreement, and each party agrees to pay to the other any damages that may be assessed by the arbitrators. Upon such contingency, each party shall designate one arbitrator, and these two shall appoint a third a-bitrator. The expense of the arbitration shall be borne by the losing party or apportioned between the parties as the arbitrators may direct.

26. This agreement and the covenants herein contained shall be binding upon, and inure to the benefit of, the heirs, executors, administrators, successors and assigns of the parties hereto.

27. Dubilier agrees under this license not to enter into the manufacture of apparatus of this invention within an area of ten miles of Philadelphia and agrees further not to grant licenses to others engaging in such manufacture in said area without the consent of the inventors.

In witness whereof, Dubilier has caused these presents to be signed by its proper officer, and the Inventors have hereunto set their hands and seals the day and year first above written.

Dubilier Condenser & Radio Corp., by H. R. Van Deventer, Vice President. Attest: M. A. Howard, Secy. (Seal.). Percival D. Lowell. (Seal.) Francis W. Dunmore. (Seal.)

Witness: Ralph R. Batcher.
Witness: J. Harold Morgan.

[fol. 180] Non-exclusive License Agreement

This Agreement, made this first day of August, 1924, by and between Percival D. Lowell and Francis W. Dunmore, of Washington, District of Columbia, parties of the first part and Timmons Radio Products Corporation, a corporation of Pennsylvania, having its principal place of business at Philadelphia, party of second part, Witnesseth:

Whereas parties of the first part are the owners of certain and useful improvements in radio receiving apparatus

for operation of such apparatus without batteries from the alternating current lighting source in the home covered by Letters Patent 1,455,141, dated May 15, 1923, and warrant that they are the sole owners thereof; and

Whereas parties of the first part are the owners of certain new and useful improvements in radio receiving apparatus for operation of such apparatus without batteries from the alternating current lighting source in the home covered by Letters Patent 1,455,141, dated May 15, 1923, and warrant that they are the sole owners thereof; and

Whereas party of the second part has facilities for the manufacture, sale and distribution of apparatus embodying said invention and is desirous of securing a non-exclusive license in and to said patent;

Now, therefore, in consideration of the payment by party of the second part to parties of the first part of the sum of One Thousand ($1000) Dollars, to be credited on account as advance royalties, upon the execution of this agreement, the parties have agreed as follows:

First. Parties of the first part hereby grant to party of the second part a non-exclusive license under said patent, to manufacture or have manufactured, and to sell apparatus embodying said invention, said license to continue during the full term of said Letters Patent, unless and until terminated as hereinafter provided.

Second. Party of the second part agrees to pay to the parties of the first part a royalty of Fifty (50c) Cents on each apparatus unit embodying the said invention manu- [fol. 181] factured and sold by party of the second part. An apparatus unit shall be a device dispensing with the A battery, a device dispensing with the B battery, or a single combined apparatus dispensing with both or all batteries.

Third. Party of the second part further agrees that in order to maintain this license that said royalties shall equal a minimum of One Thousand ($1000) Dollars per year, July 1 to June 30, and if not paid without notice within 30 days after June 30th of any year, this license shall automatically terminate. It is further agreed that in the event that party of the second part is prevented by legal process or otherwise from manufacturing, selling

and distributing the said apparatus, that notice shall be served upon parties of the first part and party of the second part shall thereupon be relieved of the payment of royalties, but such notice shall not operate to relieve party of the second part from the payment of royalties shown to be due at the time of such notice. It is understood that the agreement may be renewed under the same terms at the option of party of the second part whenever such circumstance have been overcome.

Fourth. Parties of the first part agree that in order to protect party of the second part against unreasonable competition occasioned by the attraction of skilled employees by competing manufacturers within an area of ten miles of Philadelphia that no additional licenses shall be granted in said area without the consent of party of the second part. Parties of the first part further agree to protect party of the second part from interference by other patent holders to the extent of standing ready to license such other patent holders under the aforementioned patent in consideration of the licensing of the party of the second part by such other patent holders under such other patents without further expense to the party of the second part. Parties of the first part agree that in the event that the above mentioned patent be declared invalid by a court of final and competent jurisdiction that payment of royalties under this agreement shall be discontinued.

Fifth. Party of the second part agrees to mark literature or apparatus sold under the said patent distinctively with a notice agreeable to both parties in accordance with the following suggestions:

[fol. 182] Licensed Under United States Patent 1,455,141
Dated May 15, 1923

or

Patented 5-15-23—Other Patents Pending

Sixth. Party of the second part agrees to maintain books of account open at all convenient times to the inspection of parties of the first part showing all apparatus units embodying the said invention manufactured and sold and render a report to parties of the first part every six months within Thirty days following June 30th and December 31st,

showing the number of apparatus units Manufactured and sold for the proceeding six months accompanied by payment of royalties shown then to be due.

Payments made, or notices given to P. D. Lowell, care of John B. Brady, Ouray Building, Washington, D. C., or addressed to his last known post office address shall be deemed for all purposes of this agreement made or given to the parties of the first part.

This license shall not be transferable without the consent of the parties of the first part, except to the successor or successors to the business of said Timmons Radio Products Corporation.

In witness whereon, Percival D. Lowell and Francis W. Dunmore, have signed this instrument and the Timmons Radio Products Corporation has caused this instrument to be executed by its officers thereunto duly authorized (Done in triplicate).

Percival D. Lowell. Francis W. Dunmore. Witness: William F. Diehl. Witness: Corinee D. Dunmore. Timmons Radio Products Corporation, by J. S. Timmons, President. Attest: J. McL. Timmons, Secretary.

Pltfs x 7 PLAINTIFFS' EXHIBIT No. 7, Sheet 1. (Dubilier catalogue describing Super-Ducon.) 183—184

The Super-Ducon

and how to install it • •

Eliminating all "B" batteries

A DEVICE of this sort, bettering reception, lowering the cost and improving the appearance of radio sets, has been the object of radio engineers for many years. Though special methods have been employed from time to time, using house current to replace "B" batteries for special circuits, the SUPER-DUCON is a tremendous achievement, because it is the first successful device to make house current available for *any* vacuum tube set! And it is significant that it should be the achievement of DUBILIER engineers, famous as pioneers in the development of fixed condensers.

Dubilier

Keep your set always at its best

You want your set to be working at its best when unexpected guests drop in. Perhaps you have been telling them what a wonderful set it is—but if the "B" batteries are low, it will mean disappointment to your friends and apologies from you.

With a DUBILIER SUPER-DUCON your set is always ready to give you sufficient and dependable volume. Attached to your light socket it never fails.

Constant "B" Voltage-- Always

Unlike "B" batteries, the SUPER-DUCON cannot run down. Turn the electric switch and immediately a smooth, silent "B" voltage flows to your receiver. The SUPER-DUCON requires no attention. Year in, year out, it will continue to furnish this perfect "B" power to your set.

Clearer Reception

"B" batteries when partially run down often cause crackling noises which interfere with clear reception. Clearer reception always results from the use of the SUPER-DUCON because it is noiseless.

The detector tube in most receiving sets is somewhat critical of adjustment—but a turn of the regulating knob on the SUPER-DUCON immediately varies the detector tube "B" voltage from 10 to 50 volts, giving purest tone and clearest reception.

PLAINTIFFS' EXHIBIT NO. 7, Sheet 2.
185—186
584

You don't need "B" Batteries

Power from the house lighting current, with its many advantages, has rapidly become the most practical form of "B" voltage supply.

The SUPER-DUCON always delivers a smooth, steady flow of current to your radio set and is second to none of the "B" battery eliminators now on sale. Through the concentrated efforts of our engineers and the use of only the finest quality materials, we are now producing a "B" battery eliminator which is entirely free from any power line noises.

The success of any eliminator depends almost entirely upon its condensers, for they alone make possible the filtering of the fluctuating A.C. house current into the unwavering, constant D.C. flow imperative for the successful operation of a radio set.

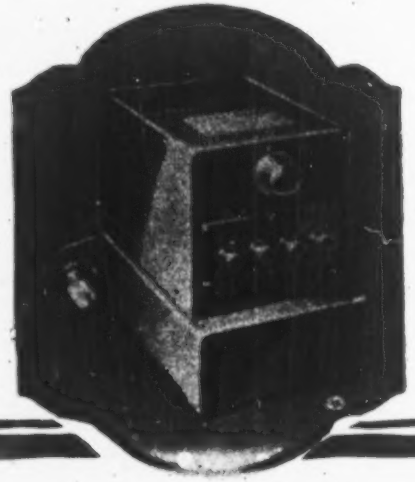

It is again significant that DUBILIER, the recognized authority on and known the world over for their condensers, should lead the field with the SUPER-DUCON.

The Rectifier Tube

The rectifier tube, second only to the filter condensers in importance, must be of extremely rugged construction both electrically and mechanically and should have an average life of at least six to eight hundred hours.

Because of its special construction, the Rectron UV-196, employed in the SUPER-DUCON, is exceptionally rugged and consequently it posesses those lasting qualities so necessary for the successful operation of a "B" battery eliminator. With its average life of one thousand hours or more the UV-196 should give satisfactory service for approximately one year. It is designed to accomplish full wave rectification, and therefore has two separate filaments. These are of the ribbon, oxide coated type, for a thorough investigation has proven their leadership over other forms of filament.

The design of this special rectifier tube is the result of intensive research in the DUBILIER laboratories and after collaboration with the engineers of the Westinghouse Electric & Manufacturing Company it is now manufactured by the latter for the Dubilier SUPER-DUCON.

PLAINTIFFS' EXHIBIT NO. 7, SHEET 3. 187—188

eat – Compact

Since radio has come down from the attic to a prominent place in the living room, it is important that accessories should be as neat and compact as possible, and not detract from the appearance of the room. Untidy "B" batteries, with their unsightly wires, must be concealed in some way in order to preserve the orderly appearance so desirable to any housewife.

The SUPER-DUCON is just 9¾ inches long, 8 inches high and 5½ inches wide—smaller than the average 80 ampere storage battery. Its enameled metal case is finished in a pleasing shade of dark green. The small size of the SUPER-DUCON makes it inconspicuous—its finish harmonizes with all surroundings.

The SUPER-DUCON is smaller than four standard 22½ volt "B" batteries of the dry cell type. The accompanying photograph gives some idea of its small size.

Cutting the cost of Radio

When you install a SUPER-DUCON there will be no more recharging or replacing of expensive "B" batteries.

There are no moving parts to wear out in the SUPER-DUCON. The rectifying element, with its average life of one thousand or more hours, may, like any ordinary incandescent lamp or radio tube, give out in time. It may, however, be replaced through any DUBILIER dealer for a nominal sum.

This chart shows the maximum power consumption of the SUPER-DUCON as compared with familiar household electrical appliances.

No matter how long the SUPER-DUCON is permitted to stand idle it does not depreciate.

PLAINTIFFS' EXHIBIT NO. 7, Sheet 4.

189-1

How to connect the SUPER-DUCON

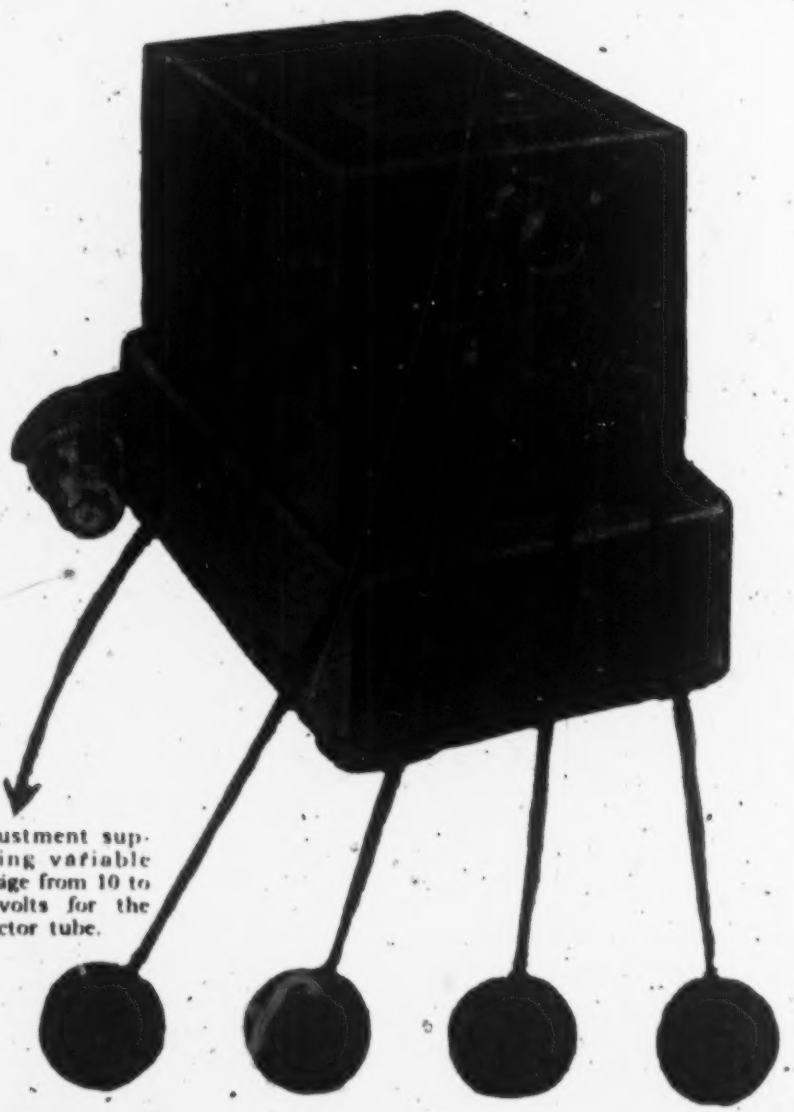

Adjustment supplying variable voltage from 10 to 50 volts for the detector tube.

Alternating Current, Type 800-A

1 −B BAT. Connect this terminal to the −B binding post on your radio set.

2 +B DET. Connect this terminal to the + B detector binding post of your set. This supplies a "B" potential of 10 to 50 volts to your detector tube, controlled by turning the regulating knob of the SUPER-DUCON. Turned clockwise voltage is increased — counterclockwise it is reduced. This adjustment gives you exactly the voltage your particular type of detector tube requires. Regulate it for the best results.

3 +B AMP. Connect this terminal to the + B amplifier binding post of your set. It supplies the amplifier voltage.

4 +B AMP. This is a separate "B" voltage tap for audio frequency amplifiers and is especially adapted for use with the new UX Radiotrons.

NOTE On ungrounded loop sets the — B terminal of the Super-Ducon must be grounded.

SUPER-DUCON for Alternating Current $47.50

INCLUDING THE NEW RCA TUBE UV 199

PLAINTIFF'S EXHIBIT No. 7 sheet 5

191-192

To get the best results

THE picture diagram and explanations, given on pages 8 and 9 of this booklet, adequately describe the connections on the SUPER-DUCON. We suggest, however, that you carefully read the following pages before installing the machine.

The new SUPER-DUCON has four "B" battery binding posts as may be seen from the cut on page 8.

On receivers having four "B" battery terminals use all posts on SUPER-DUCON as in diagram No. 1.

When connecting the SUPER-DUCON to radio sets having but three "B" battery terminals, ignore the last "B Amp." post on the SUPER-DUCON and connect as shown in diagram No. 2.

If a radio set calls for but two "B" terminals connect the SUPER-DUCON as in diagram No. 3.

If you have a loop set or a receiver in which the "A" Battery is not grounded through a connection within the receiver itself it will then be necessary to put an additional ground wire to the —B post on the SUPER-DUCON. CAUTION: DO NOT USE THIS CONNECTION UNLESS YOU ARE SURE THE "A" BATTERY IS NOT GROUNDED.

On the last pages of this booklet you will find a chart of some well known makes of radio receivers. If your receiver is listed among them it is only necessary to refer to the diagram recommended. The fourth column marked "GROUND NOTE" shows whether or not a ground wire should be connected to the —B terminal on the SUPER-DUCON to obtain best results.

WHEN installing the SUPER-DUCON, care should be taken to keep it at least two feet from the receiver itself. This will not be found difficult in most cases. If it is desired to place the SUPER-DUCON in the cabinet of the radio set, keep it as far from the audio frequency end of the set as possible. Do not allow the SUPER-DUCON cord to become coiled up near any portion of the receiver or the antenna lead-in.

Reducing Output Voltage of the Super-Ducon

If the output voltage of the SUPER-DUCON is greater than required, a variable resistance of from five thousand to ten thousand ohms may be used as shown in diagram No. 4. This resistance, when connected across the output terminals allows a voltage regulation of from forty or fifty volts to maximum. When the SUPER-DUCON is used with the Radiola Super-Heterodyne or similar receivers using dry cell tubes we recommend this connection.

Important

In some localities reception may be improved by entirely removing the ground wire from the receiver and connecting it to the —B binding post on the SUPER-DUCON.

PLAINTIFFS' EXHIBIT No. 7 sheet 6
193-
194

The SUPER-DUCON and your receiver

Diagram No. 1

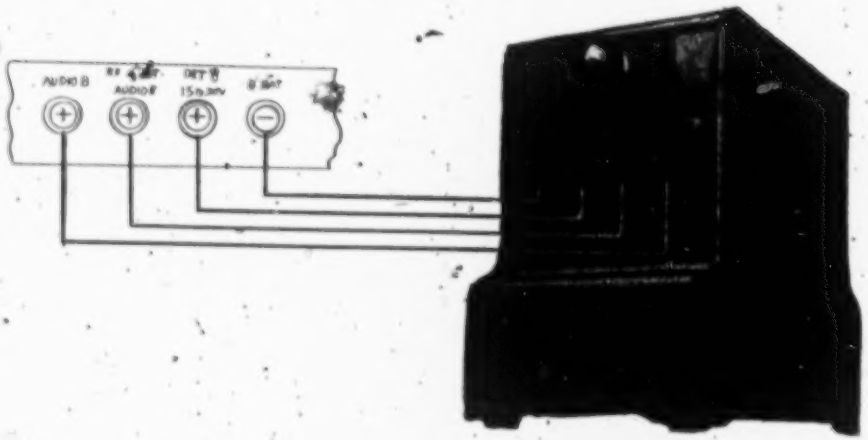

Diagram No. 2

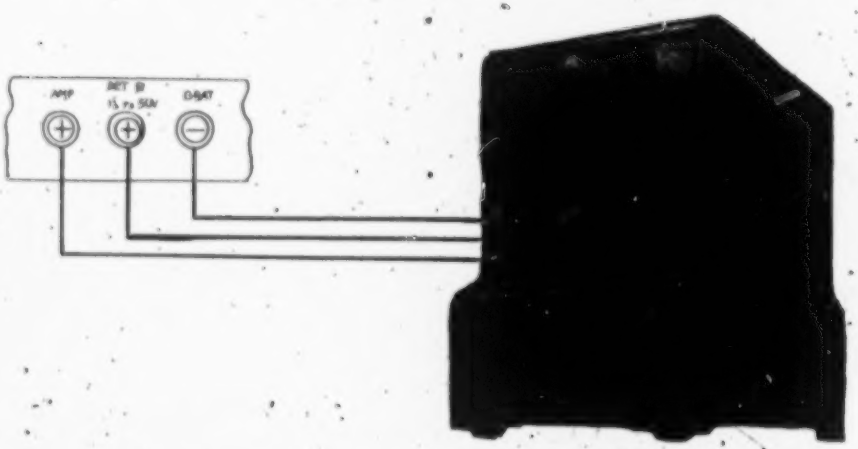

Diagram No. 3

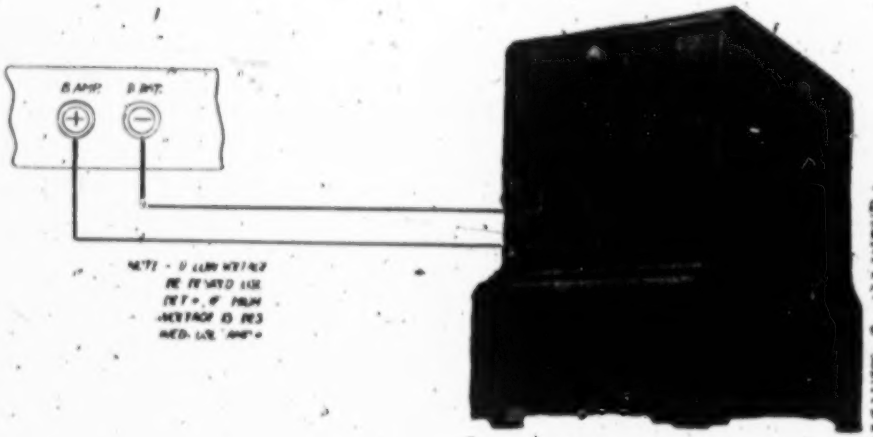

Diagram No. 4

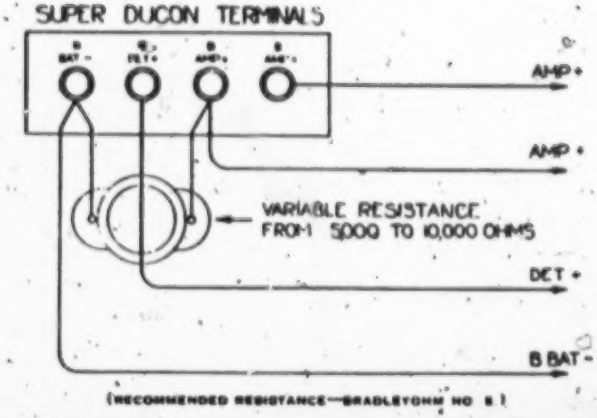

PLAINTIFF'S EXHIBIT NO. 7, SHEET 1.

196

General index of receivers

Name	Model	Use Diagram	Ground Note	Remarks
A-C Dayton	All models	2	See note	
Adams Morgan	Paragon Six	3		
Adler Royal	All models	2		Medium detector voltage
All Amax	Jr. and Sr.	3	See note	
Andrews	Deresnadyne	2		
Atwater Kent	9, 10, 19, 20 & Deluxe	2		
Blair	All models	2		
Bosch	Amborola	1		
Buckwalter	Supertone	2		
Chelsea	All models	2		
Colonial	All models	2		
Crosley	Trirdyn	2		Detector voltage critical
Crosley	Models 51 and 52	2		
David Grimes	Baby Grand	2	See note	Cable wires must be lengthened
David Grimes	4D	2	See note	
Day-Fan	All models	2	See note	Low detector voltage
De Forest	F-5	2		
De Forest	W-5	2	See note	
Eagle Radio	Eaglet	2		
Eagle Radio	Model D	2		
Eagle Radio-Electrola	Model F	1		
Fada		2		
Fada	195 A	2		
Federal	175A, 185A	2	See note	
Freed-Eisemann	141	1	See note	
Freed-Eisemann	FE-15, FE-18	2		
Freshman	NR-7, NR-45	1		
Garod	Masterpiece	2		
Garod	Model M	3		
Gilfillan	V and Georgian	1		
Gilfillan	GN-5, GN-6	2		Has conveniently long cable
Gilfillan	GN-1, GN-2	2		
	GN-4	2		Cable wires must be lengthened
Grebe	Syncrophase	2		
Henderson	Both types	2		
Henry Hyman		2	See note	
Jos. W. Jones	All models	2		
Kellogg	Wave Master	2		
Kennedy	15, 16, 20	2	See note	Low detector voltage
King Radio	All models	2		
Kolster Radio	Six	1		Very low detector voltage
Kolster Radio	Eight	1	See note	" " " "
Marlodyne		2		
Marvodyne		2	See note	
Melco Supreme		2		High voltage on detector
Music Master	50, 60, 100, 140, 175, 215, 300	2		
Music Master	250, 460	1	See note	
Newport Radio	V, V-200, V-100	2		
Operadio		2	See note	
Oriole	5, 6, 6-D and 7	2		Do not use the ground for antenna on this receiver
Pfanstiehl	All models	2		
Pinkatone		2	See note	
Plio-6		2		
Premier Radio	6-B	2		
Premier Radio	7-B	3		
Radiodyne	WC-10, 11, 14, 15	2		Low detector voltage
Sonora	Model C	2	See note	Note their instructions re detector
Splitdorf	All models	2		
Standardyne	B-5, BH	2		
Stromberg Carlson	No. 1-A	2		
Stromberg Carlson	New models	1		
Sypher Reflex		2	See note	
Thermiodyne	All models	2		
Thompson	V-50, Grandette S-60, Parlor Grand S-70	2		
Thompson	Minuet R-81, Duo-Tone C-61	1		
Thorola	Isiodyne	2		
Valley-Tone	All models	2		Low detector voltage
Ware	Type 250W	3		
Workrite	All models	2		

GROUND NOTE

Any receiver listed above that is referred to this note requires an extra ground wire which should be connected to the —B binding post of the Super-Ducon. Connect the ground post on the radio receiver and the —B post on the Super-Ducon together; and continue this wire to ground, preferably from the end attached to the Super Ducon.

DUBILIER CONDENSER & RADIO CORP., NEW YORK, U.S.A.

PLAINTIFFS' EXHIBIT NO. 7a.

(Blueprint of wiring diagram of Super-Ducon.)

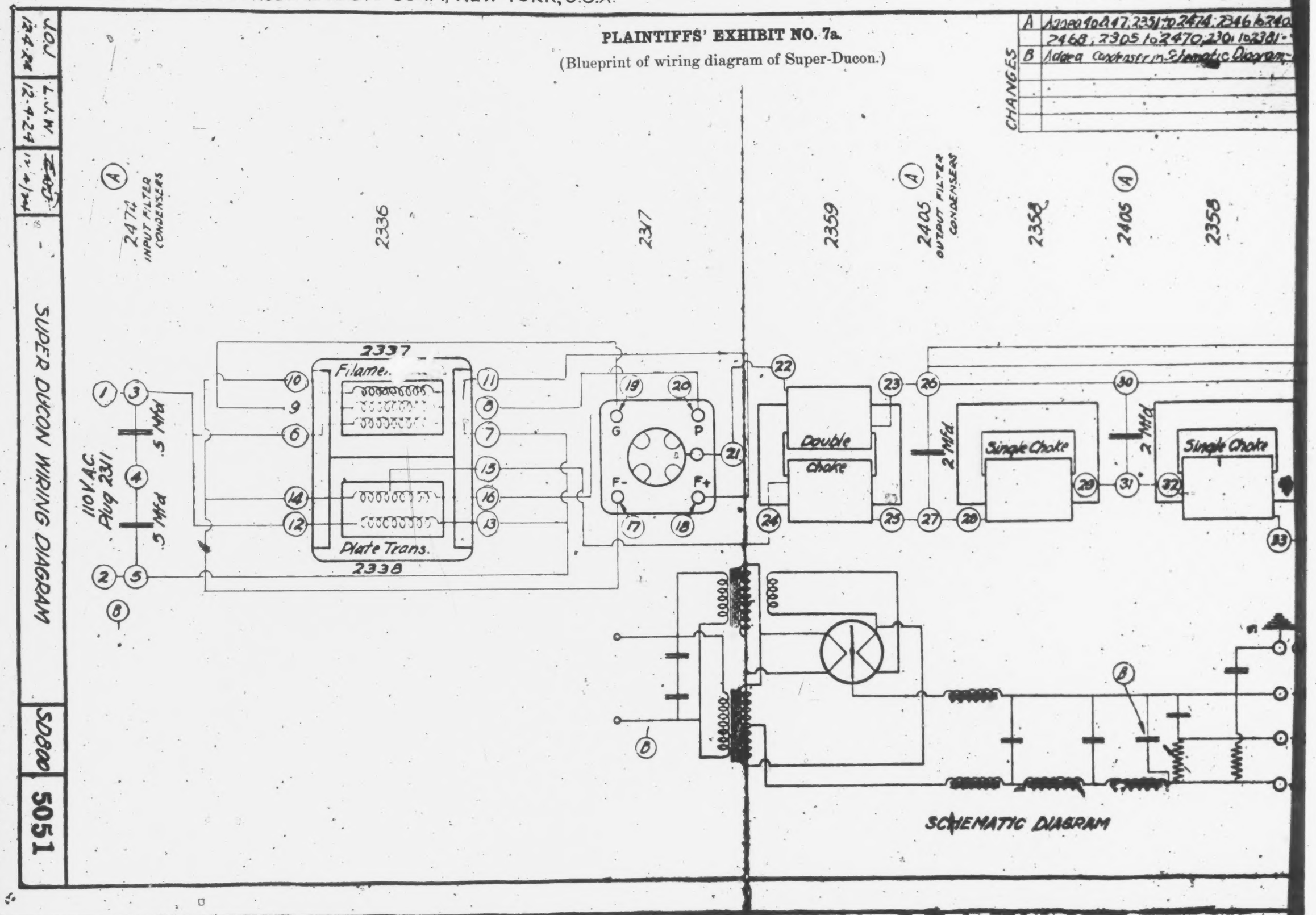

ONDENSER & RADIO CORP., NEW YORK, U.S.A.

PLAINTIFFS' EXHIBIT NO. 7a.

(Blueprint of wiring diagram of Super-Ducon.)

CHANGES	
A	Added 2340, 2347, 2351 to 2414, 2346 to 2405, 2345 to 2401, 2335 to 2468, 2305 to 2470, 2301 to 2381 - 9 1/4, 25 [illegible]
B	Added Condenser in Schematic Diagram - Removed Switch [illegible]

2336 2337 2359 2405 OUTPUT FILTER CONDENSERS 2358 2405 2358 2405 2259 2460 GROUND TO CASE 2381 A

2337 Filament Trans. 2338 Plate Trans.

Double Choke 2 Mfd. Single Choke 2 Mfd. Single Choke 2 Mfd.

G P F- F+

GND -B BAT +DET. +AVC

SCHEMATIC DIAGRAM

PLAINTIFFS' EXHIBIT No. 15,
(Photograph of Type A relay).

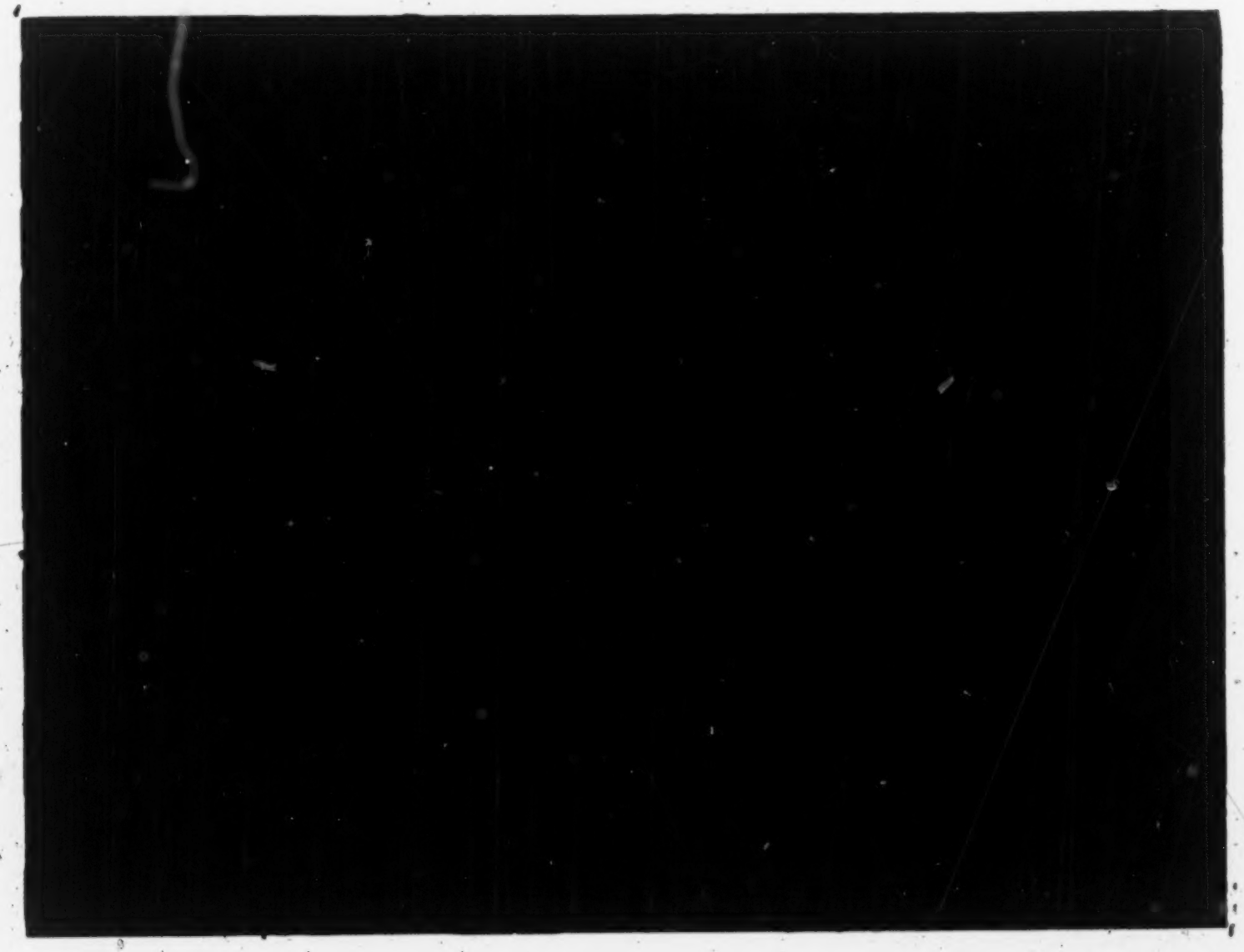

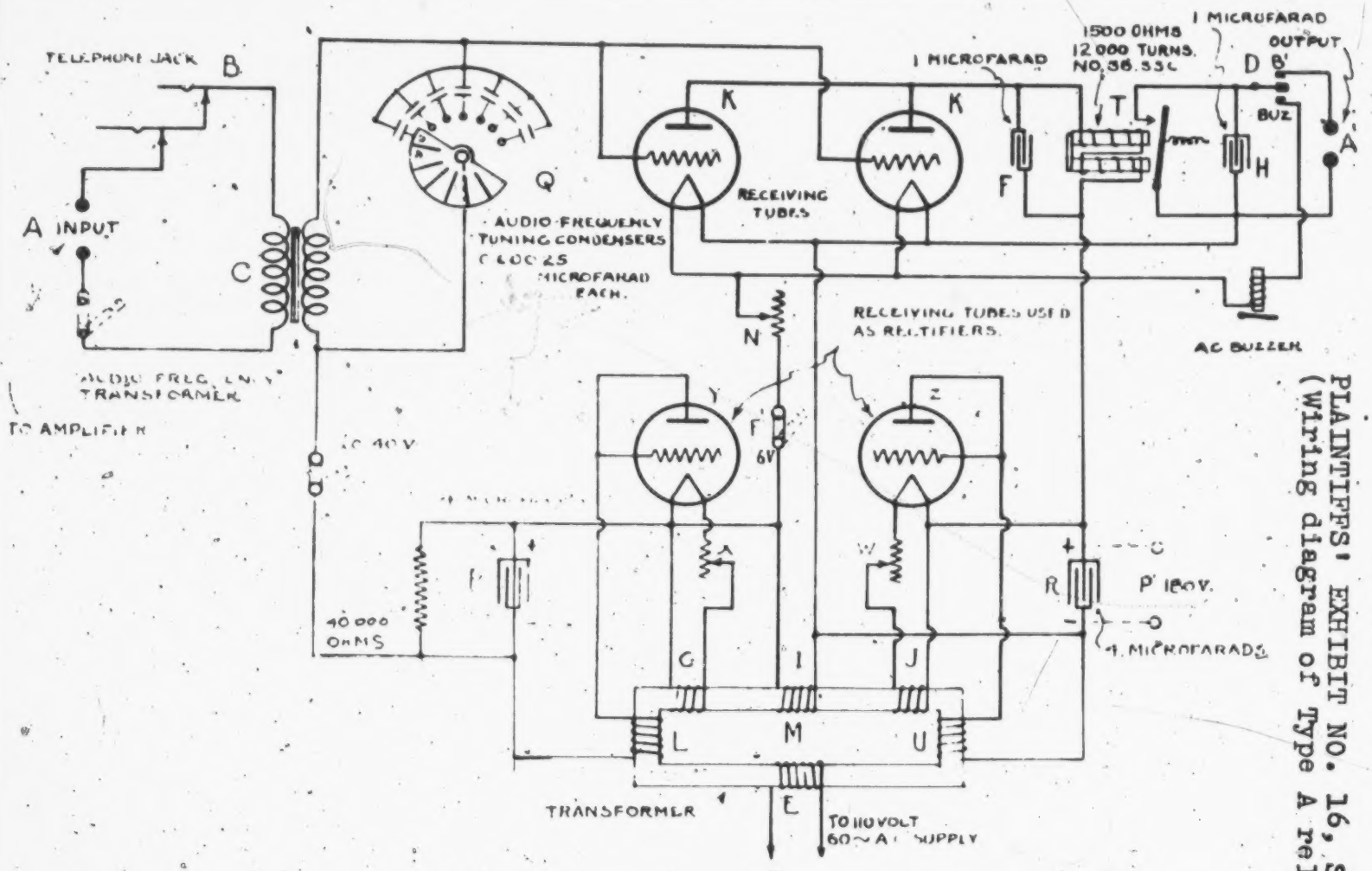

A RELAY RECORDER FOR REMOTE CONTROL BY RADIO TYPE B

FOR USE ON 110 VOLTS 60~ CIRCUITS

FIG 4

PLAINTIFFS' EXHIBIT NO. 16, SHEET 1.
(Wiring diagram of Type A relay)

168

9

203-204

PLAINTIFFS' EXHIBIT NO. 16, SHEET 2.

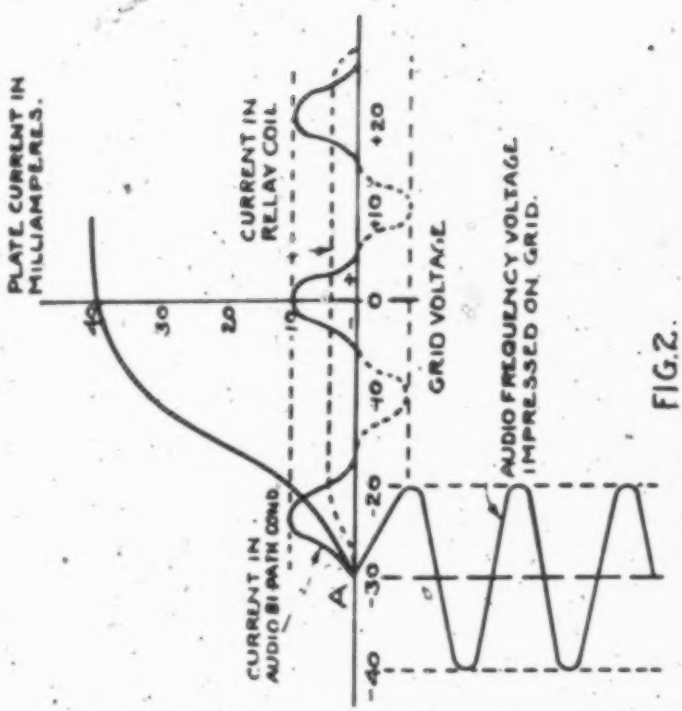

FIG.2.
TUBE CHARACTERISTIC FOR RELAY FOR REMOTE CONTROL BY RADIO.

Nov. 1. 21.

7848

B4

2

PLAINTIFFS' EXHIBIT NO. 16, SHEET 3.

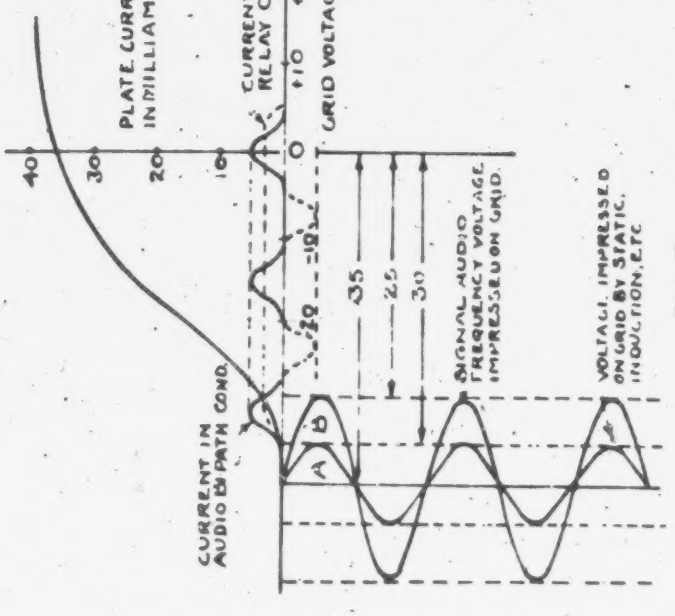

FIG. 3.

TUBE CHARACTERISTIC FOR RELAY FOR REMOTE CONTROL BY RADIO.

METHOD OF ELIMINATING STATIC, INDUCTION ETC. WHICH IS NOT STRONGER THAN THE SIGNAL, BY PROPER ADJUSTMENT OF GRID VOLTAGE.

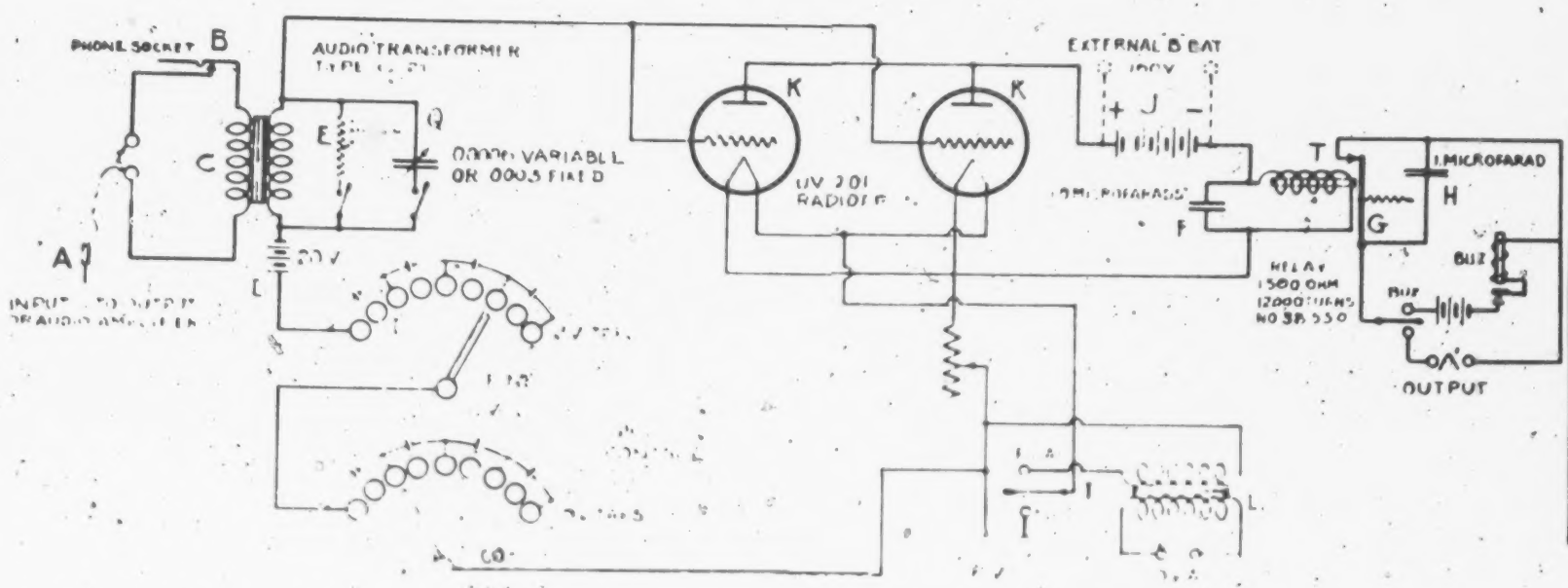

FIG.

RELAY RECORDER FOR REMOTE CONTROL BY RADIO

TYPE A

PLAINTIFFS' EXHIBIT NO. 17,
(Photograph of Bureau of Standards Set) 211— 21

PLAINTIFFS' EXHIBIT NO. 18,
(Wiring diagram of Bureau of Standards Set.)

Plaintiffs' Exhibit No. 68

H. C. Mackaffy Jr.

Clerk.

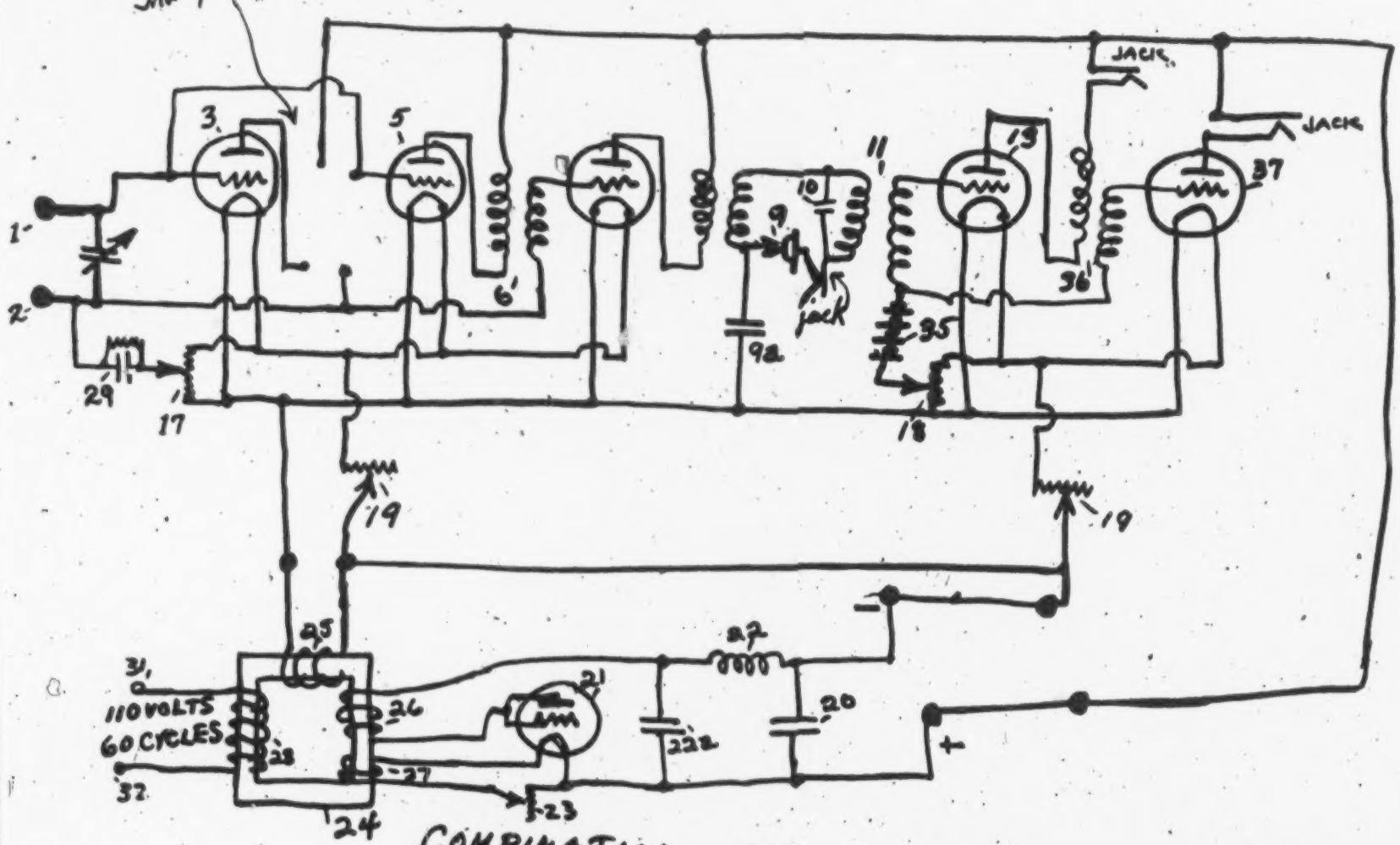

COMBINATION OF LOWELL AND DUNMORE EXHIBITS. NOS. 45 AND 46

Radio Broadcast. Oct 1922

215—
216

PLAINTIFFS' EXHIBIT No. 21, Sheet 1,
(Newspaper and Periodical Articles.)
(Radio Broadcast, Oct. 1922)

Plaintiff Ex 21

Pltfs X 21

ELIMINATING "A" AND "B" BATTERIES BY GETTING POWER FROM THE LAMP SOCKET

SOME months ago there appeared a notice that the physicists of the Bureau of Standards were ready to hand over to the radio public a wonderful hoop in the shape of a triode amplifier which required no batteries of any kind for its operation. To many of us whose enjoyment of a concert has been spoiled by the sudden giving out of the filament storage battery, or who have been bothered by noisy, loose connections or bad cells in the plate battery, this announcement was indeed welcome. The interest of the public in the new device was so great that the Bureau had to get out a form reply to the numerous inquiries as to how soon the description of this battery-less amplifier would be ready.

In the July number of the Journal of the A.I.E.E. there is an interesting description of

REPLACING "A" AND "B" BATTERIES

This equipment, developed by the Bureau of Standards, does away with batteries for reception. Six tubes are employed in addition to a crystal detector. The Bureau is working on a device which will make use of a vacuum tube in place of the crystal

this amplifier by Physicist Lowell, of the Bureau, who has done the major part of the development work in the perfection of the new apparatus. The article shows the growth of the idea from a simple three-tube arrangement to the final product, which has the Bureau's seal of approval, an amplifier and rectifier outfit using altogether seven tubes and a crystal rectifier. Three tubes are used to make a radio-frequency amplifier feeding into a crystal detector circuit, which changes the modulated high-frequency current into an audio-frequency current; from this crystal circuit the current passes through two stages of low-frequency amplification into a loud speaker.

The filaments of all tubes are supplied with power from the secondary of a specially wound transformer, the primary of which draws its power from the ordinary sixty-cycle alternating current supply available in the average home. One rectifier tube, in combination with choke coils and condensers suitably connected supplies plate current for all the tubes and the other rectifier tube supplies the current used to excite the magnetic field of the loud speaker used. The latter tube is of the gas-filled variety, the Tungar tube used in small storage battery charging outfits. This type of tube, by the way, is a direct outgrowth of the Hewitt mercury arc rectifier, the source of electrons being a hot filament instead of the hot spot in the pool of mercury as used in Hewitt's rectifier.

The transformer and rectifier tubes are conveniently mounted in one box and the five-tube amplifier unit is compactly arranged in another; in order to make the amplifier operate it is necessary only to connect the flexible cord in the ordinary lamp socket. The amount of power drawn from the house circuit is about the same that is used by an ordinary fifty-watt lamp.

It seems incongruous to incorporate a crystal rectifier in a modern receiving set; we have thought that crystals were due to go into the discard, but this apparatus apparently gives them a new lease on life. Developments are being carried out in the tube laboratories, however, which will soon give us a tube of peculiar construction such that it may fill the place occupied by the crystal in this latest amplifier circuit.

With this new tube available, the bureau will undoubtedly substitute it for the crystal rectifier and this amplifier of Lowell's will then be the most convenient outfit we have seen. The dry cell and storage battery manufacturer will probably see their sales fall away to some extent, but the radio public at least that part of the public which can afford to maintain a seven-tube receiving set—will be greatly benefited by this new apparatus.

ARBITRATION SOCIETY OF AMERICA MAY END RADIO DISPUTES

ALTHOUGH the founding of this society has nothing directly to do with the present progress of radio, it is not at all impossible that some of the wrangles, necessarily occurring in an art going forward at such a rapid rate as is radio, may find their way into the court of the Arbitration Society and thus be settled much more expeditiously and fairly than is the

PLAINTIFFS' EXHIBIT NO. 21, Sheet 2 (Newspaper Article - New York Times, April 25, 1922, Page 9, "Eliminates Battery in New Radio Phone".

217-218

INCENDIARY STARTS 5 KIRBYVILLE FIRES

State Police Aid in Search for Maniac Who Uses Gasoline in Terrorizing Town.

$100,000 LUMBER BLAZE

This is Followed by Fires at Hotel, Two Dwellings and Barn, the Last Being Consumed.

MT. KISCO, N. Y., April 24.—A fire-[illegible] being sought by the authorities [illegible] and the State Police. It is known [illegible] he started three fires today in [illegible], a mile away, on the Chap-[illegible] road, and a fourth blaze at a [illegible] on the Armont and Mt. Kisco road, [illegible] afternoon. It is believed he was [illegible] for a $100,000 lumber fire [illegible] in the yards of Young, Hal-[illegible] & Co., in this town.

[illegible] was necessary to get help from the [illegible] departments of White Plains, [illegible], Chappaqua, Briarcliff and [illegible] to fight the lumber fire. About [illegible] o'clock this morning three calls for [illegible] were received from Kirby-[illegible].

The fires occurred at the same time, [illegible] the police say, all were set by an [illegible]. The first was at the Lexing-[illegible] Hotel, a small house, occupied only [illegible] Cornelius Link and his son and [illegible]. Flames were seen in three [illegible] in the building by a taxicab [illegible], who awakened the occupants. A [illegible] can was found near by and it [illegible] evident that gasoline had been [illegible] by the firebug. The damage was [illegible] $1,500.

Five persons were asleep in the home [illegible] Henry Hoffman when fire was [illegible] there. All got out safely. A [illegible] can was found near this house [illegible] is about one hundred feet [illegible] the Lexington Hotel. The flames [illegible] put out before much damage was [illegible].

[illegible] the home of M. [illegible] Daley, 1,000 feet [illegible], a bale of hay, soaked with [illegible], was found burning. It was [illegible] away before the building caught [illegible].

The afternoon fire consumed the barn [illegible] Dante McMahon. The struc-[illegible] was burned to the ground, no water [illegible] available. The loss was estimated [illegible].

[illegible] had been in the barn for sev-[illegible] hours. When the blaze was dis-[illegible] the interior was a mass of [illegible]. McMahon and his men barely [illegible] time to save an automobile. The [illegible] devoted their efforts to prevent-[illegible] the flames from reaching the dwell-[illegible].

[illegible] of the State constabulary and [illegible] searched the woods for sev-[illegible] miles without avail. The barn was [illegible] a mile from the houses set afire in [illegible] morning.

[illegible] for miles around tonight kept [illegible] on their property. Guards also [illegible] on the lookout for the firebug.

WOMEN GUILTY OF ANARCHY.

Bronx Jury Convicts Two Dis-[illegible] Radical Literature

ELIMINATES BATTERY IN NEW RADIOPHONE

Government Invention Replaces Undesirable Storage Unit With Electric Power.

WASHINGTON, April 24.—Elimination of the storage battery, the most expensive part of the home made radio receiving set, is now possible according to the Bureau of Standards of the Department of Commerce.

The receiving sets which are now used in receiving radio signals, music and the like over distances of perhaps hundreds of miles require a storage battery to light the filaments of the electron tubes. The battery must be charged from time to time, it is bulky and heavy, the acid in it is a source of danger and damage to the household and altogether it constitutes a drawback to the general use of radio sets.

The receiving set developed by the bureau connects with the ordinary electric lamp socket. The set may be used with any type of antennae, and by special means of connection it is even possible to use the electric light wires themselves as the antennae. The set consists essentially of an amplifier with minor auxiliary parts. It is described in a paper which will be published by the Bureau of Standards about May 1.

The amplifier will utilize a sixty cycle current supply for both filaments and plates of the electron tube, thus eliminating much of the interference met in an ordinary amplifier circuit.

"This interference," an announcement says, "has been practically eliminated by balancing resistances, grid condensers and special grid leaks of comparatively low resistance, telephone transformer in the output circuit, and crystal detector, instead of electron tube detector.

"In the final form of the amplifier there is only a slight residual hum, which is not objectionable. The amplification obtained with alternating current supply was as good as that obtained with the same amplifier used with the direct current supply. The complete unit is light, compact and portable. For the reception of damped waves, the amplifier as constructed worked most satisfactorily for wave lengths from 200 to 750 metres. This range was determined by the working range of the radio-frequency transformers used.

"By using suitable radio-frequency transformers it is expected that the amplifier will be effective for the reception of damped waves and undamped waves as long as 10,000 metres."

PEORIA, Ill., April 24.—If science can discover how the lightning bug's sending apparatus flashes light waves, present day radio science may be superceded, E. G. Shalkhauser, professor of physics and radio science, at Bradley Polytechnical Institute here, said today. He believes that the firefly can send out an electric magnetic wave, but its source is still a mystery and this he is investigating.

"If we could find this source, I think we could throw away all our antennae, audion bulbs and other apparatus, because in my belief the lightning bug may have a little power plant of his own more highly perfect than any fruit of radio science," said Professor Shalkhauser.

"It has been proved repeatedly that the wave transmitted by the bug is a cold light wave. The light wave, heat wave and radio wave are the same in a sense, because they have the same frequency. It may be possible to tune down to a sufficiently low wave length to discern the bug [illegible]."

CAUGHT SMUGGLING CHINESE

Captain and Crew Seized After 29

You
in B
Pric
impr
with
torie
Safe
Com
you
learn
Alwa
than
est q
GF
Of
The Gen
New York
138 Br
Phone
NEW Y

PLAINTIFFS' EXHIBIT NO. 21, SHEET 3,
(Washington Herald, April 14, 1922,
Page 9, "Electron Tubes Replace
Battery")

219 — 220

[redacted]

George F. Warfield, organist.

William W. Welker aged 46, a former resident of this city, died this morning in a Washington hospital after a long illness. He is survived by his widow, his parents, Mr and Mrs George W. Welker, 111 North Royal street, a brother and sister. Mr. Welker was a veteran of the Spanish-American War. He was a member of Alexandria Lodge No. 758, Benevolent and Protective Order of Elks, and Osceola Tribe of Red Men. The funeral will be held at 1:30 o'clock Monday afternoon at 227 Thirteenth street southwest, Washington, and burial will be in Arlington National Cemetery.

The annual Holy Thursday procession held in St. Mary's Catholic Church today will be repeated at the Good Friday services tomorrow morning.

RADIO MEASURE TO BE RI[redacted]SHED

Secretary Hoover [redacted] interest has been re[redacted] o the The bill which [redacted] traffic rules of [redacted] generally regarded as [redacted] still needs "polishing." [redacted] story Hoover expects his [redacted] necessary action Monday, on [redacted] transmittage on M[redacted]

Representative [redacted] fairs will introduce the [redacted] House, while Hoover said, at the [redacted]

EZ
TABLETS RELIEVE CONSTIPATION
At Hooton and Other Good Drug Stores

How to Banish Piles

[redacted] Dr. Leonhardt's HEM-ROID.

[redacted] Dr. Leonhardt's HEM-ROID.

[redacted] Dr. Leonhardt's HEM-ROID.

PLAINTIFFS' EXHIBIT NO. 21, SHEET 4, (New York Globe, April 25, 1922, page 13, Article on "Elimination of Battery")

221—222

E GLOBE AND COMMERCIAL ADVERTISER, NEW YORK, TUESDAY, APRIL 25, 1922.

MENT

Government to Describe Set Minus Battery

Elimination of the storage battery, the most expensive part of the home-made radio receiving set, is now possible according to the Bureau of Standards of the Department of Commerce in a statement issued yesterday.

The receiving sets which are now used in receiving radio signals, music, etc., over distances of perhaps hundreds of miles require a storage battery to light the filaments of the electron tubes. The battery must be charged from time to time, it is bulky and heavy, the acid in it is a source of danger and damage to the household and altogether it constitutes a drawback to the general use of radio sets.

The receiving set developed by the Bureau of Standards makes connection with the ordinary electric lamp socket. The set may be used with any type of antenna, i. e., with the ordinary elevated wire antenna, a coil antenna, or special forms of antenna. By special modes of connection, it is even possible to use the electric light wires themselves as the antenna, but the signals are likely to come in with less strength when this is done.

The receiving set consists essentially of an amplifier with minor auxiliary parts. This is described in a paper which has been prepared and will be published by the Bureau of Standards about the first of May, and sold at 5 cents a copy. A few details of the amplifier, which utilizes 60-cycle current supply for both filaments and plates of the electron tubes, are as follows: This amplifier has three radio-frequency stages and two audio-frequency stages, and uses a crystal detector. The 60-cycle current when used in an ordinary amplifier circuit introduces a strong 60-cycle note which offers serious interference. This has been practically eliminated by balancing resistances, grid condensers and special grid leaks of comparatively low resistance, telephone transformers in the output circuit, and crystal detector, instead of electron tube detector. In the final form of the amplifier, there is only a slight residual hum which is not objectionable. The amplification obtained with a. c. supply was as good as that obtained with the same amplifier used with d. c. supply. The complete unit is light, compact and portable. For the reception of damped waves, the amplifier as constructed operated most satisfactorily for wave lengths from 300 to 750 meters.

DEMAND

LISTENING IN

Steamers of the Admiral Line on the Pacific Coast have installed high power receiving equipment, for the use of passengers, according to reports. The purser of the S. S. Yale is said to have reported to the Atlantic-Pacific Radio Supply Company of the Rockridge Station at Oak Island that broadcasted concerts had been received on his steamer. Several steamers of the line in question have dances by radio music as a regular part of the life on board. On one of the ships, the Ruth Alexander by name, a magnavox has been placed in the main salon and a connection in each cabin.

The wireless operator of the S. S. Luckenbach has just sent word to the General Electric Company that on March 30, between the hours of 3.50 and 4.38 in the morning, while the ship was south of Panama in the Pacific at seven degrees north of the equator, he had been able to pick up a musical concert sent out from Station W G Y in Schenectady. This is by airline a distance of more than 2,000 miles and establishes a new record for the General Electric station.

The ship operator, W. W. Braire, reports the time he heard each selection, named each selection and his letter bears a confirmation of the ship's location signed by the master of the vessel. His report checks up exactly with the log of the concert broadcasted that night by the General Electric Company.

Prior to the letter from the S. S. Luckenbach, the southernmost point reached by the Schenectady station was Tela, Honduras. Richard B. Dudley, chief operator on the S. S. Coppenane, United Fruit liner, tied up in the port of Tela, reported that he has distinctly heard the programme sent out from W G Y on March 14. Other distant southern places which have reported hearing W. G. Y. are Santa Clara, Cuba, and Mexico City.

What is believed to have been one of the earliest feats of amateur radio telephony has just b light in the finding of the Minneapolis Tim 1902. The clipping e.a the effects of D. McN to the president of the ation of America. Thi picture of the status raphy at that time, theories held by popu cerning it. The clip part:

"While experimenting telegraphy Friday ev Nichol, general telegra Soo road, was startle messages from some on experimenting with th

"The messages was but letters and word through so distinctly as McNichol that he was a very satisfactory tes

"There was nothing d and Mr. McNichol c some ordinary electrica caused it. But a few the instrument clicked letters were plain. La more connection to the words could be spelle 'after' was the first o complete.

"Mr. McNichol now roughly assured, and h

Sandman Stories For the Kiddies

Piggly-Wiggly, Man-In-the-Moon and many other delightful juvenile characters will delight the youngsters at bedtime—and the grown-ups too.

Let us install a

Westinghouse

Receiving Set in your home, so that you may enjoy the complete radio concerts sent out daily from the great broadcasting stations.

Free demonstrations any hour of the day on the hour.

Radio-Phone Equipment Co.
400 SEVENTH AVENUE
New York City

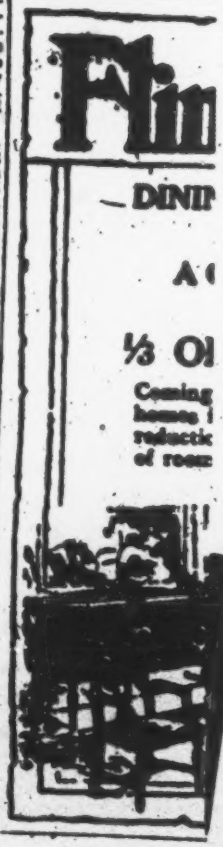

PLAINTIFFS' EXHIBIT NO. 21, SHEET 5,
(Washington Star, April 24, 1922,
Page 10, "Storage Batteries for
Radio Passe")

223 – 224

THE WASHINGTON POST: TUES

RADIO DEPARTMENT

der Web il Efficient, Yet Simpl

[redacted] 8, "How [redacted] Batteries"

of the mos[redacted] uning indu[redacted] s the spid[redacted] coil. They [redacted] and it is quite possible to make [redacted] erent sizes in their [redacted]s and [redacted]m the same way that honeycomb coils are used. The means that [redacted] may be arranged to plug in in [redacted] me manner and by making [redacted] larger it is possible to get on [redacted] her wave lengths.

[redacted] coils may be used: One as [redacted] secondary and tickler for a [redacted] tive set with a vacuum tube [redacted] coils as a primary and sec- [redacted] with a crystal set. The hook [redacted] he former case is the same as [redacted] eycomb coils and in the latter [redacted] will be the same as for a loose

[redacted] coupler. In regard to the [redacted] the coils and how many turns [redacted] to put on them the best thing [redacted] to actually make them up [redacted] periment around with them. It [redacted] t impossible to actually give [redacted] ber of turns of wire to put [redacted] coils and the way to do is to [redacted] e core or frame a good size [redacted] wind it full of wire. About [redacted] five inches in diameter should [redacted] right for a start. After the [redacted] all wound on connect the set [redacted] securely and try it out. If [redacted] too much wire on, the slider [redacted] y yard will come in. If this [redacted] ase remove some of the wire [redacted] again. Keep this up until [redacted] le is heard and then try tak- [redacted] one turn at a time until the [redacted] sults are obtained. Be sure [redacted] his test while you know that [redacted] it is in progress as otherwise [redacted] ht take all of the wire off [redacted] and still not hear any music.

The Winding Form.

[redacted] be seen in the drawing, the [redacted] very simple to make and it [redacted] primarily of a piece of card- [redacted] ich as a heavy pad back. [redacted]

RADIO PROGRAM

TUESDAY, APRIL 25, 1922.

WWZ—Postoffice Department.
10 a. m.—Weather report for District of Columbia, Pennsylvania, Ohio, Maryland, Virginia and West Virginia.
10:30 a. m.—Marketgram (fruit and vegetable) on 1,160 meters.
12:30, 2:15 and 3:30 p. m.—W. marketgram telegrams on 1,950 meters.
5 p. m.—Wholesale dairy report on 1,160 meters, by radiophone.
7:30 and 8 p. m.—Market report on 1,160 meters, by radiophone.
9:30 p. m.—Weather report.

WPM—Thomas J. Williams Company.
12:30 p. m.—News items and report on stolen automobiles.

WJH—White & Boyer Co.—7:00 p. m. (Direction of Theodore Hoffman—H. K. L.)on, operator.)
"Address, "Business Ethics," by Mr. Isaac Gans, vice president Washington Chamber of Commerce; orchestra selections, by the Variety Club orchestra of Washington; fox trot, "Everybody Step" (Berlin); waltz, "April Showers (B[redacted]); fox trot, "Leave Me With a [redacted]cohler); soprano solos, Miss [redacted]ngwell-Smith, "Rose in My [redacted](Courtney); "Ring Me to [redacted]reams) Miss Roberta Gerou, piano; piano solos, Mrs. H. [redacted] Rustle of Spring" (Sinding) [redacted] India" (Rimsky-Korsakoff), [redacted] solos, Mr. Fred Komle, "[redacted]Stealing," Mr. Byron Bled[redacted] piano; orchestra selections, [redacted] variety Club orchestra of [redacted], fox trot, "[redacted]n't Leave [redacted]my;" waltz, "Three o'Clock" (Bohm); [redacted] Merriage" (Gabriel); "[redacted] Baby Fingers" [redacted] solos, Mr. James Lambert [redacted] (McGill); "I [redacted] You, Dear [redacted]), Mr. Theodore Hoffman [redacted] piano; piano solos, "Love's [redacted]" (Nevin); regular medley, Mrs. H. J. Reed; orchestra selections, by the Variety Club orchestra of Washington, fox trot, "Wabash Blues" (Meinken); waltz, "Ohio Shore" (Akst); fox trot, "Grapey;" harpland solos, Ms. Fred Komle; selection, "Swanee River Moon," Mr. Byron Blodgett at the piano; soprano solo, Miss Mildred Maxwell-Smith, "My Garden" (D'Hardelot); "A Dream" (Bartlett), Miss Roberta Gerou, at piano; orchestra selection, "The Bells of Araby."
The Variety Club orchestra of Washington, Mr. Justin McCarthy, violin, director; Mr. Isadore Rosenberg, pianist; Mr. James Briscoe, banjo; Mr. Homer Bland, drums; Mr. Benjamin Grotman, saxophone; Mr. J. H. Whiting, cornet.

WWZ—Doubleday-Hill Electric Company.
4:30 to 5:30 p. m.—"Tony and Pennant," Part I (von Suppe); Viennese Waltz, piano (Gaertner); "The Bird and the Saxophone" (Hager-Ring); "Narbstuck," piano (Schuman); "Faust," soprano (Gounod); "Valse," piano (Chopin); "Rigoletto," soprano and baritone (Verdi); "Caprice Viennois," violin (Kreisler); "Fantaisie," piano (Chopin); "Lohengrin," soprano (Wagner); "Don Juan Fantaisie," piano (Liszt); "Tony and Pennant," Part II (von Suppe); "The Woodland Flirt" (Hager-Ring); "On Wings of Song," piano (Mendelssohn).

WJH—Newark.
11 a. m.—Music, government weather forecast.
12 m.—Music, government weather forecast, agricultural report.
1 p. m.—Music.
2 p. m.—Music.
5:05 p. m.—Shipping news.
7 p. m.—Music.

NEW HOME-MADE SET ELIMINATES BATTERY

Bureau of Standards Perfects Apparatus Which Runs With Lamp Socket.

Elimination of the storage battery, the most expensive part of the home-made radio receiving set, is now possible according to the bureau of standards of the Department of Commerce.

The receiving sets which are now used in receiving radio signals, music, &c., over distances of perhaps hundreds of miles require a storage battery to light the filaments of the electron tubes. The battery must be charged from time to time, it is bulky and heavy, the acid in it is a source of danger and damage to the household and altogether it constitutes a drawback to the general use of radio sets.

The receiving set developed by the bureau of standards makes connection with the ordinary electric lamp socket. The set may be used with any type of antenna, i. e., with the ordinary elevated wire antenna, a coil antenna, or special forms of antenna. By special modes of connection, it is even possible to use the electric light wires themselves as the antenna, but the signals are likely to come in with less strength when this is done.

The receiving set consists essentially of an amplifier with minor auxiliary parts. This is described in a paper which has been prepared and will be published by the bureau of standards about May 1, and sold at 5 cents a copy. A few details of the amplifier, which utilizes 60-cycle current supply for both filaments and plates of the electron tubes, are as follows: This amplifier has three radio-frequency stages and two audio-frequency stages, and uses a crystal detector. The 60-cycle current when used in an ordinary amplifier circuit introduces a strong 60-cycle note which offers serious interference. This has been practically eliminated by balancing resistances, grid condensers and special grid leaks of comparatively low resistance, telephone transformer in the output circuit, and crystal detector, instead of electron tube detector. In the final form of the amplifier, there is only a slight residual hum which is not objectionable. The amplification obtained with a. c. supply was as good as that obtained with the same amplifier used with d. c. supply. The complete unit is light, compact and portable. For the reception of damped waves, the amplifier as constructed operated most satisfactorily for wave lengths from 200 to 750 meters. This range was determined by the working range of the radio-frequency transformers used. By using suitable radio-frequency transformers, it is expected that the amplifier will be effective for the reception of damped waves and undamped waves as long as 10,000 meters. For the reception of undamped waves, a separate heterodyne should be employed. The paper gives circuit diagrams and states the values of the condensers, resistors and inductors used.

BUG CODE MAY UPSET RADIO.

PLAINTIFFS' EXHIBIT NO. 21, SHEET 6,
(Washington Star, April 24, 1922,
Page 10, "Storage Batteries for
Radio Passe")

L,
Famc
Brand
10., 25c

T REGULAR PRICES

Olive Oil, ½-pt. can 29c
a, bottle (double strength) . . 12c
lad Dressing; bottle 27c
No. 1 can 13c
ured Bacon (in strips), lb . . 24c
auce, large can 17c
, evaporated, lb 38c
. doz 20c
ach Rolls, 50 sheets, 7c
ish Cleanser, can 8c
nions, lb 12c
ottles 96

our—24 Lb Be 25

LOW PRICE
Tea, lb 15c
rder Tea, lb . . . 15c
Breakfast Tea, L 35c
., 46c

3-Oz. Jar, 11c
3-Oz. Jar, 23c

PASTEURIZED
ILK
; QUARTS, 11c

TATO CHIPS
At All Times Crisp,
c and 9c; Bulk, 1 lb., 39c

RY best? Order
RSBREAD

STORAGE BATTERY FOR RADIO PASSE

Bureau of Standards Finds Way to Eliminate Danger and Expense.

Elimination of the storage battery, the most expensive part of the home-made radio receiving set, is now possible, according to the bureau of standards of the Department of Commerce in a statement released today.

The receiving sets which are now used in receiving radio signals, music, etc., over distances of perhaps hundreds of miles require a storage battery to light the filaments of the electron tubes. The battery must be charged from time to time, it is bulky and heavy, the acid in it is a source of danger and damage to the household, and altogether it constitutes a drawback to the general use of radio sets.

Connected at Lamp Socket.

The receiving set developed by the bureau of standards makes connection with the ordinary electric lamp socket. The set may be used with any type of antenna, i.e., with the ordinary elevated wire antenna, a coil antenna, or special forms of antenna. By special modes of connection, it is even possible to use the electric light wires themselves as the antenna, but the signals are likely to come in with less strength when this is done.

The receiving set consists essentially of an amplifier with minor auxiliary parts. This is described in a paper which has been prepared and will be published by the bureau of standards about May 1, and sold at 5 cents a copy. A few details of the amplifier, which utilizes 60-cycle current supply for both filaments and plates of the electron tubes, are as follows: This amplifier has three radio-frequency stages and two audio-frequency stages, and uses a crystal detector. The 60-cycle current, when used in an ordinary amplifier circuit, introduces a strong 60-cycle note which offers serious interference.

Practically Eliminated.

This has been practically eliminated by balancing resistances, grid condensers and special grid leaks of comparatively low resistance, telephone transformer in the output circuit, and crystal detector, instead of electron tube detector. In the final form of the amplifier there is only a slight residual hum which is not objectionable. The amplification obtained with alternating current supply was as good as that obtained with the same amplifier used with the direct current supply. The complete unit is light, compact and portable. For the reception of damped waves, the amplifier as constructed worked most satisfactorily for wave lengths from 300 to 750 meters. This range was determined by the working range of the radio-frequency transformers used. By using suitable radio-frequency transformers, it is expected that the amplifier will be effective for the reception of damped waves and undamped waves as long as 10,000 meters. For the reception of undamped waves, a separate heterodyne should be employed. The paper gives circuit diagrams, and states the values of the condensers, resistors and inductors used.

TRACE "FRYING NOISES"

BY RA

NAA—Naval R
10:30 a.m.—
5,000 meters of
12, noon and
followed by w
orders.
9 p.m.—Arbo
livered by Sec
Department of
10:30 p.m.—N
length 2,650 m
NOF—Naval A
D. C.
8:30 to 9:15
Fridays—Musi
WWZ—Post Of
10 a.m.—Wea
10:30 a.m.—
phone.
12:30 p.m.
p.m.—Telegram
meters.
WHL—Doubled
pany
1:20 to 2:30
Base ball sco
W.J.S.—Newark
Every hour
sical program
11 a.m., 12
p.m.—Weather
2:05 p.m.—Sh
9:25 p.m.—Tin
7:40 p.m.—Sto
Magazine
7:30 to 9:40 p.m
Veiling, harpist
Fred McPherso
Koenig, violini
will be announc
9:00 to 10:15 p
Recital by Ma
soprano; Berne
accompanist.
(Coombs), "Ho
"Thank God
Riego), "Oh! D
Riego), "Just a
J. Bond), "Irish
"Here Are
(Schupae), "M
cott), "Un Bel
"Madame Butter
Song" (Napro
Land" (Grotsol
Russian Folk So
van Has Rested
(Phillips), "B
Piano Solos—
(Beethoven).
"The Nightingal
"Pastoral of Va
Hungarian Rha
KYW—West
1300 meters
9:35 a.m.—Op
Chicago Board of
until 1 p.m.
1:20 p.m.—Cl
tions.
2:15 p.m.—Ne
ports.
4:15 p.m.—New
reports.
6:30 p.m.—New
stock reports.
7:30 p.m.—Chil
8:9 p.m.—Conc
an, soprano; Flo
to; Frank J. Fl
mental concert
linist; Clement
Grace McKeen,
Landis, dramati
Sidney Spiegel,
dio).
9 p.m.—News a
KDKA—West
1300 meters.
10 to 12:30 a.m.
12:30 to 1 p.m.
2 to 3:30 p.m.—
4 to 6:30 p.m.—
7:30 p.m.—Bedt
7:45 p.m.—Spec
market reports.
York Stock Exc
port
8 p.m.—"Rires

PLAINTIFFS' EXHIBIT NO. 21, SHEET 7,
(A.I.E.E. Journal, Dec. 1922, Page 188)

227- 228

Conclusions

Transmission at 220 kv. has been invested with a certain glamour, and the further investigation has been carried the more certain it appears that transmission at this voltage will only differ in degree from transmission at lower voltages, with which we are familiar. No new or startling effects are expected or appear probable.

The unequal voltage distribution over long insulator strings can be eliminated to the degree where individual units will be stressed less than they now are on lines in commercial operation. This is effected by shield rings which at the same time can be so designed as to keep any accidental arc well away from the insulators. Corona upon insulators and hardware is also prevented.

Standard suspension insulators can be used, so that 220-kv. transmission need not wait upon the design and trial of new types of insulator.

Transformers and switches are already developed, and have been built by more than one manufacturer.

The corona constants of large cables are known within rather narrow limits so that lines can be confidently designed to have definite known losses.

The charging current of commercial lines is also sufficiently well determined so that calculations of voltage regulation will be accurate.

There are therefore no apparent obstacles in the way of 220-kv. transmission, the only requirement being that the amount of power to be transmitted shall be sufficiently large, and the distance great enough to warrant the cost of 220-kv. equipment. The increased carrying capacity of the transmission lines then more than offsets the equipment cost and 220-kv. transmission becomes more economical than at any lower voltage.

Note on the Development of an Electron Tube Amplifier

Which Uses 60-Cycle Alternating Current to Supply Power for the Filaments and Plates

BY. P. D. LOWELL

Associate Physicist, Bureau of Standards.

Electron tube amplifiers now form an important part of practically all radio receiving sets except the most simple types. Storage cells, which have heretofore usually been required for operating amplifiers, require constant attention, are bulky and heavy, and have other serious disadvantages. The dry cells, which are often used as a source of plate voltage, have a comparatively short life and are expensive and inconvenient. It would be much more convenient to use an amplifier which could be supplied with power from 110-volt, 60-cycle mains.

This paper describes a five-stage amplifier which operates satisfactorily on 60-cycle supply for both filaments and plates. This amplifier has three radio-frequency stages and two audio-frequency stages, and uses a crystal detector. A special transformer with five windings is used, the primary being supplied with 110-volts a-c. The 60-cycle current [illegible] of comparatively low resistance, [illegible] tube detector. In the final form of the amplifier, there is only a slight residual hum which is not objectionable. The amplification obtained with a-c. supply was as good as that obtained with the same amplifier used with d-c. supply. The complete unit is light, compact, and portable. For the reception of damped waves, the amplifier as constructed operated most satisfactorily for wave lengths from 300 to 750 meters. This range was determined by the working range of the radio-frequency transformers used. By using suitable radio-frequency transformers, it is expected that the amplifier will be effective for the reception of damped waves and undamped waves as long as 10,000 meters. For the reception of undamped waves, a separate heterodyne should be employed. The paper gives circuit diagrams, and states the values of the condensers, resistors and inductors used.

ELECTRON tube amplifiers now form an important part of practically all radio receiving sets, except the most simple types. Such amplifiers are in fact necessary to receive distant stations, or when using coil antennas. For good operation, amplifier tubes require for the filament a source of voltage of very constant value (usually about 6 volts) and for the plate a source of voltage of from 40 to perhaps 300 volts. The filament voltage is usually supplied by storage cells, and the plate voltage by dry cells. The maintenance of these cells in operating condition, especially the storage cells, is often a source of much difficulty and annoyance. The storage cells are necessarily bulky and heavy, require constant attention to maintain proper charge and density of electrolyte, give off injurious acid or other fumes, and are subject to considerable variations of voltage during the period of discharge. The development of an amplifier which can be supplied from the ordinary 110-volt a-c. lighting mains is of considerable practical importance, since it would eliminate the practical difficulties of maintaining storage cells. The amplifier using such a-c.

supply has the important advantages of reliability, convenience, and cheapness both in first cost and operating cost.

Such an amplifier using five stages of amplification has been developed at the Bureau of Standards. There are three stages of radio-frequency amplification and two stages of audio-frequency amplification. It is the purpose of this note to describe briefly this amplifier.

The first arrangement, tried consisted of one radio-frequency stage of amplification, detector and one audio-frequency stage. The filaments of the three tubes were lighted by 6 volts supplied by a step-down transformer, the primary of which was connected to the 110-volt, 60-cycle power mains. The circuit is shown in Fig. 1.

In Fig. 1, the filament lighting transformer is shown at *A*, supplying voltage for the filaments of electron tubes *B*, *C* and *D*. The amplifier input circuit is connected to the grid of tube *B* and to the slider of the balancing resistance *E*, the latter having a resistance of 200 ohms and being connected across the filament line. A radio-frequency transformer is shown at *H*,

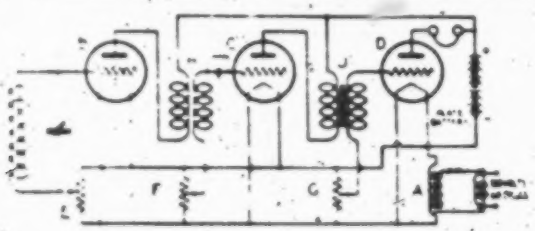

Fig. 1 Two-Stage Amplifier Circuit Using Two Detectors

a balancing resistance at *F*, an audio-frequency transformer, at *J*, and another balancing resistance at *G*. The purpose of the balancing resistances *E*, *F*, *G*, is to keep the normal voltage of the grids at a steady value with respect to the average voltage of the electrical midpoint of the filament and thus to eliminate the hum which variations of the grid voltage would cause. These balancing resistances are adjusted until the hum is eliminated. Reception was accomplished with this circuit but there was considerable 60-cycle hum present in spite of the beneficial effect of the balancing resistances.

The employment of a crystal detector in place of the electron tube detector reduced the 60-cycle hum very considerably. This circuit is shown in Fig. 2.

When an electron tube is used as the detector, there is impressed on both the plate and the filament a 60-cycle a.c. voltage which, although small, becomes very objectionable when amplified by one or two stages of audio-frequency amplification. When the crystal detector is used, no 60-cycle voltage is supplied to the detector circuit. The radio-frequency transformer whose output is delivered to the detector circuit prevents the passage in any appreciable amount of 60-cycle current supplied to the radio-frequency stage, and such voltages are not present in the crystal detector circuit and do not reach the input of the audio-frequency stage.

The employment of a crystal detector may at first seem objectionable, since with the crystal as ordinarily used it is rather difficult to find a point of good sensitivity. But tests on this amplifier showed that careful adjustment of the crystal detector was not necessary because the radio-frequency amplification preceding

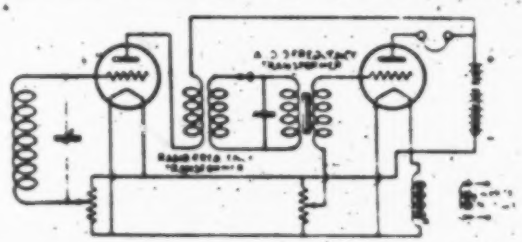

Fig. 2 Two-Stage Amplifier Using Crystal Detector

the detector usually gave sufficient signal strength so that a point of sufficient sensitivity could be easily found.

This circuit gave quite good results. The 60-cycle hum was practically eliminated and the crystal detector gave almost as good rectification as the tube detector.

It was found that better amplifying action could be obtained by inserting condensers of about 0.02 microfarad capacity, shunted by 2-megohm grid leak resistances, in the grid circuits, in series with the sliders of the balancing resistances. The grid condensers and grid leak resistances allow the grids to assume a normal voltage which is more favorable for amplifying purposes. The leak resistances allow any accumulated charge on the grids to leak off to the filaments. Still better amplification and quieter operation was produced by

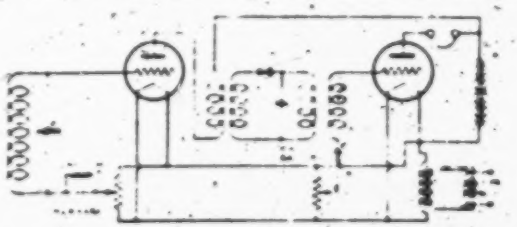

Fig. 3 Two-Stage Amplifier Using Crystal Detector With grid condenser for radio stages and grid batteries for audio stages

replacing the series grid condenser and leak in the audio stage with a 10-volt battery giving a negative charge to the grid. A battery of dry cells was used for this purpose; since only an extremely small current is required, the life of the dry cells is practically their shelf life. This gave a circuit as shown in Fig. 3.

Alternating current rectified by means of a gas-filled two-element rectifier tube a "Tungar" tube was tried as a source of filament power but the residual hum was much greater than when unrectified alternating current was used. This is because of the fact that during rectification, the wave form becomes distorted and it becomes impossible to stabilize the grid voltage by means of the balancing resistances.

607

In the above-mentioned tests, a plate battery was used for convenience, but this was replaced by alternating current which had been rectified by means of an electron tube and smoothed out with condensers of large capacity. The rectification circuit for the plate voltage supply is shown in Fig. 4.

In Fig. 4, the primary P of the transformer T is connected to the power mains, and winding R gives 8 volts for the filament of the rectifier tube W. Winding S gives 300 volts which is rectified by the tube W and smoothed out by the condenser Q, which has about 10 microfarads capacity. This gives at terminals M and N a high-voltage direct current which is quite suitable for use on the plates of the amplifier tubes. Rheostat Z varies the brilliancy of the filament of the rectifier tube and, simultaneously, the voltage for the plates.

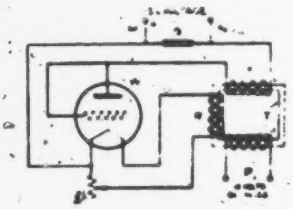

FIG. 4 RECTIFICATION CIRCUIT FOR PLATE VOLTAGE SUPPLY

The use of a loud-speaking telephone receiver such as the "Magnavox" was made possible by applying to the field coil of the loud speaker an alternating current rectified by a "Tungar" rectifier tube. The impedance of the field coil was sufficient to smooth out the pulsating current to such an extent that the hum was not annoying. It was also advantageous to couple the loud-speaking reproducer circuit to the plate circuit of the last amplifier tube by means of a one-to-one ratio telephone transformer with a 0.02-microfarad condenser in series with the telephone circuit. This helped considerably to reduce the residual hum in the telephones.

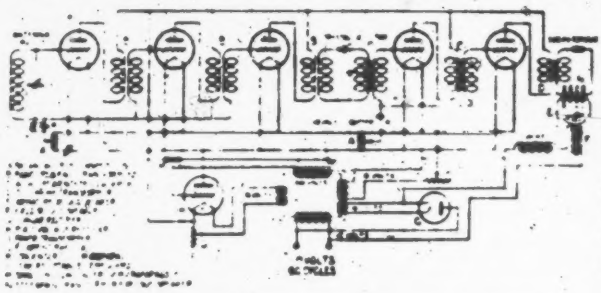

FIG. 5 FINAL COMPLETE CIRCUIT OF FIVE-STAGE AMPLIFIER USING CRYSTAL DETECTOR

Using 60-cycle alternating current to supply power for the filaments and plates

The final circuit is shown in Fig. 5, and includes three stages of radio-frequency amplification, galena crystal detector, two stages of audio-frequency amplification, loud-speaking reproducer, and the necessary power transformer and rectification circuits.

This final circuit gives good amplification, with a slight residual hum which is not great enough to be objectionable when receiving signals of ordinary readable strength. The residual hum is of course more objectionable when extremely weak signals are being received. Radiotelephone music and conversation are clearly reproduced.

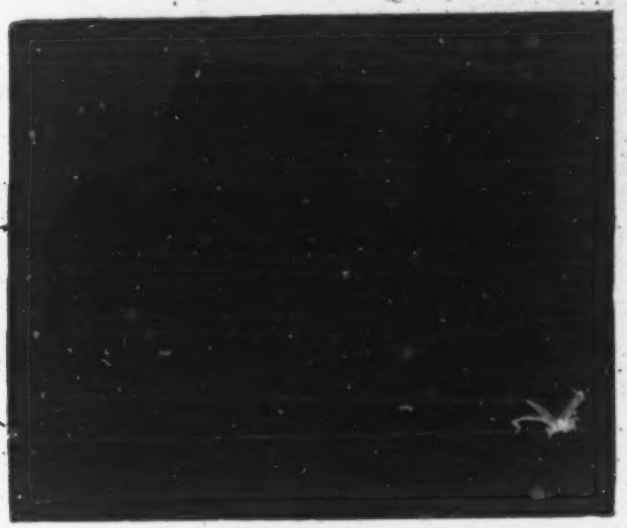

FIG. 6 ASSEMBLED RECTIFIER AND AMPLIFIER UNITS

The amplifier was operated under normal conditions using the usual sources of direct-current supply, and then switched over to alternating-current supply. This comparative test showed the a-c. supply to give as good amplification as the d-c. supply.

For the reception of damped waves, the amplifier as constructed operated most satisfactorily for frequencies from 400 kilocycles to 1500 kilocycles per second (750 to 200 meters). This frequency range was determined by the working range of the radio-frequency transformers used. By using suitable radio-frequency transformers, it is expected that the amplifier will be effective for the reception of damped waves for frequencies as low as 30 kilocycles (10,000 meters). This amplifier has also been found effective for the reception of undamped waves, when used with a separate heterodyne.

The special transformer with five windings and the rectifier tube were assembled in one box, and the amplifier tubes and amplifier transformers and other apparatus were assembled in a separate box. This was done to avoid having the amplifier immediately adjacent to the special transformer, from which it would pick up considerable 60-cycle hum. The assembled rectifier unit measured about 8 in. by 8 in. by 9 in. and weighed about 21 pounds. The assembled amplifier unit measured about 8 in. by 11 in. by 14 in. and weighed about 21 pounds.

Fig. 6 shows the rectifier unit and the amplifier unit as completed, with the plug to connect with the 60-cycle lighting current. A six-inch rule is shown leaning against the rectifier unit.

Mr. F. W. Dunmore was a coworker and participated in the development of this instrument. The author wishes to acknowledge his indebtedness to Mr. R. S. Ould for helpful suggestions in preparing this paper.

PLAINTIFFS' EXHIBIT NO. 21, SHEET 10, 233—
(Radio for September 1922, Page 27.). 234

An Amplifier with A. C. Filament and Plate Supply

By P. D. Lowell

Associate Physicist Bureau of Standards. Adapted from July, 1922, A. I. E. E. Journal

WHEN an electron tube is used as the detector with a. c. supply, ... is impressed on both the plate and filament a 60-cycle hum which, although small, becomes very objectionable when amplified by one or two stages of audio-frequency amplification. When a crystal detector is used with ... frequency tube amplifier no 60-... voltage is supplied to the detector ... t. The radio-frequency transformer whose output is delivered to the ... tor circuit prevents the passage in ... ppreciable amount of 60-cycle current supplied to the radio-frequency ... and such voltages are not present ... the crystal detector circuit and do ... reach the input of the audio-frequency stage.

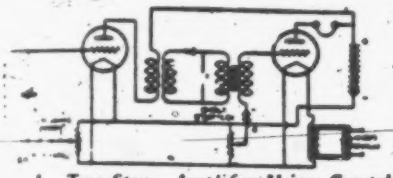

Fig. 1. Two-Stage Amplifier Using Crystal Detector

The employment of a crystal detector ... at first seem objectionable, since ... th the crystal as ordinarily used, it is ... ther difficult to find a point of good ... nsitivity. But tests on this amplifier ... ow that careful adjustment of the ... stal detector is not necessary, because ... radio-frequency amplification pre... the detector usually gives sufficient signal strength, so that a point of sufficient sensitivity can be easily found. This circuit, as shown in Fig. 1, gives ... te good results. The 60-cycle hum ... practically eliminated and the crystal ... tector gives almost as good rectification as the tube detector. It is found ... at better amplifying action can be ... tained by inserting condensers of about ... 02 microfarad capacity, shunted by ... megohm grid leak resistances in the ... d circuits, in series with the sliders ... the balancing resistances. The grid ... ondensers and grid leak resistances al... the grids to assume a normal volt... ge which is more favorable for ampli... ing purposes. The leak resistances allow any accumulated charge on the grids to leak off to the filaments.

Still better amplification and quieter operation was produced by replacing the series grid condenser and leak in the audio stage with a 10-volt battery giving a negative charge to the grid. A battery of dry cells was used for this purpose; since only an extremely small current is required, the life of the dry cells is practically their shelf life. This gave a circuit as shown in Fig. 2.

Alternating current rectified by means of a gas-filled two-element rectifier tube (a "Tungar") was tried as a source of filament power, but the residual hum was much greater than when unrectified alternating current was used. This is because of the fact that during rectification the wave form becomes distorted and it becomes impossible to stabilize the grid voltage by means of the balancing resistances.

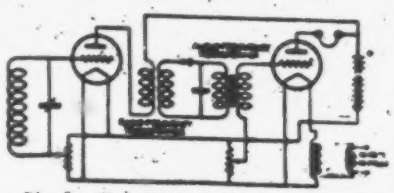

Fig. 2. Two-Stage Amplifier Using Crystal Detector with Grid Condenser for Radio Stages and Grid Battery for Audio Stages.

In the above-mentioned tests a plate battery was used for convenience, but this was replaced by alternating current, which had been rectified by means of an electron tube and smoothed out with condensers of large capacity. The rectification circuit for the plate voltage supply is shown in Fig. 3.

In Fig. 3 the primary P of the transformer *T* is connected to the power mains, and winding *R* gives 8 volts for the filament of the rectifier tube *W*. Winding *S* gives 300 volts, which is rectified by the tube *W* and smoothed out by the condenser *Q*, which has about 10 microfarads capacity. This gives at terminals *M* and *N* a high-voltage direct current, which is quite suitable for use on the plates of the amplifier tubes. Rheostat *Z* varies the brilliancy of the filament of the rectifier tube and, simultaneously, the voltage for the plates.

The use of a loud-speaking telephone receiver, such as the "Magnavox," was made possible by applying to the field coil of the loud speaker an alternating current rectified by a "Tungar" rectifier tube. The impedance of the field coil was sufficient to smooth out the pulsating current to such an extent that the hum was not annoying. It was also advantageous to couple the loud-speaking reproducer circuit to the plate circuit of the last amplifier tube by means of a one-to-one ratio telephone transformer with a 0.02-microfarad condenser in series with the telephone circuit. This helped considerably to reduce the residual hum in the telephones.

The final circuit is shown in Fig. 4, and included three stages of radio-frequency amplification, loud-speaking reproducer, and the necessary power transformer and rectification circuits.

This final circuit gives good amplification, with a slight residual hum which is not great enough to be objectionable

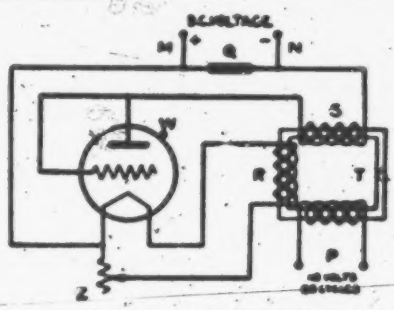

Fig. 3. Rectification Circuit for Plate Volt... Supply

when receiving signals of ordinary readable strength. The residual hum is, of course, more objectionable when extremely weak signals are being received. Radiotelephone music and conversation are clearly reproduced.

The amplifier was operated under normal conditions, using the usual

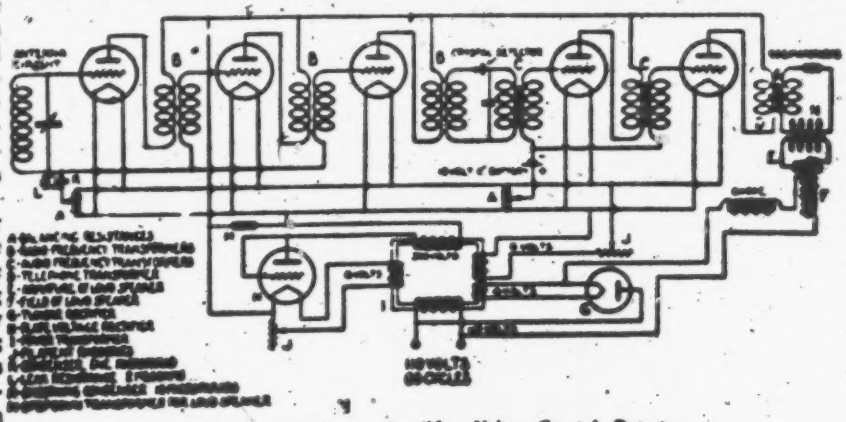

Fig. 4. Five-Stage Amplifier Using Crystal Detector

PLAINTIFFS' EXHIBIT NO. 21, SHEET 11,
28 (Radio for September, 1922, Page 28)

sources of direct-current supply, and then switched over to alternating-current supply. This comparative test showed the a.-c. supply to give as good amplification as the d.-c. supply.

For the reception of damped waves, the amplifier as constructed operated most satisfactorily for frequencies from 400 kilocycles to 1500 kilocycles per second (750 to 200 meters). This frequency range was determined by the working range of the radio-frequency transformers used. By using suitable radio-frequency transformers, it is expected that the amplifier will be effective for the reception of damped waves for frequencies as low as 30 kilocycles (10,000 meters). This amplifier has also been found effective for the reception of undamped waves when used with a separate heterodyne.

The special transformer with five windings and the rectifier tube were assembled in one box, and the amplifier tubes and amplifier transformers and other apparatus were assembled in a separate box. This was done to avoid having the amplifier immediately adjacent to the special transformer, from which it would pick up considerable 60-cycle hum. The assembled rectifier unit measured about 8 in. by 9 in. and weighed about 21 pounds. The assembled amplifier unit measured about 8 in. by 11 in. by 14 in. and weighed about 21 pounds.

DUPLEX RADIO-TELEPHONE SYSTEM ON AIRCRAFT

By S. R. WINTERS

The transmission and reception of radio-telephone messages simultaneously from aircraft in flight are possible by an arrangement recently devised by the Air Service of the United States Army. Heretofore wireless installations on air-going machines have been primarily for the purpose of receiving messages. It was in this capacity that radio-equipped aircraft were so useful in scouting over enemy-occupied territory in the recent World War.

The twofold service—transmitting and receiving—afforded by recent installations of specially-designed radio-telephone outfits is known as the duplex system. Two electric generators are employed, with the introduction of a new change-over switch, which obviates the use of several instruments heretofore installed with the conventional installation of SCR-73 set. Two antennas are required, one for the transmitting and one for the radio-telephone receiver, but the sending and reception of music or vocal speech can be negotiated at the same instant.

Preliminary tests of aircraft thus equipped have been conducted, the results at reasonable distances being satisfactory. Long-range tests have not been made as yet, although it is probable that this duplex system may demonstrate its efficiency when subjected to distant assignments. Already music has been successfully relayed from a radio-telephone on the ground to aircraft soaring 4000 ft. in the air.

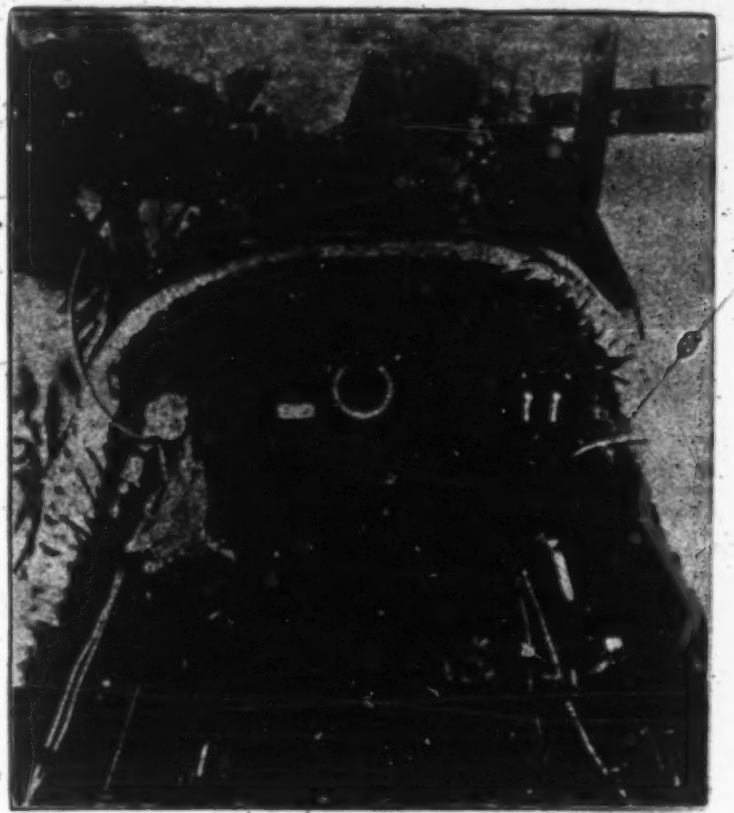

Installation of Radio Set on DH4

Official Photograph U. S. Army Air Service Photographic Section

ARMY AIRSHIP SETS

Army plans for new radio sets for their semi-rigid airships call for central power stations which would include generators geared to gasoline engines, after the fashion in which a magneto is driven, but never before attempted. The French tried out belt-driven electrical generators, but with little success. However, representatives of the Air Service Engineering Department at McCook Field expect to develop a central power plant that will give sufficient power for putting ½ kw. in the antenna and also power for lighting, heat and electrical control work.

The Army Air Service plans to use the new Signal Corps set 135, combining radiophone and telegraph circuits good for distances up to 75 miles and 200 miles, respectively. The range will be greater than is planned for the big Martin bombers, however, as better facilities for erecting aerials are available on airships than on planes. One method considered is to install the antenna within the envelope; another is to suspend it below the ship, drawing it up upon landing; while a third contemplates hanging the wires of the aerial along the sides and over the top of the ship. Experiments will determine which of these methods is the most efficient.

Naval radio experts are loath to reveal their definite plans for the radio equipment of the ZR ships, but it is said that they may parallel the Army's ideas, although their ships will be about twice the size of the largest Army semi-rigids now planned, giving them greater latitude and more room for equipment.

TUBES NOW AVAILABLE FOR SHIPS

F. P. Guthrie, head of the Radio Division of the Shipping Board, states that all privately owned ships, as well as Government operated vessels, may now be equipped with a special receiving tube which will be produced by the Radio Corporation to sell for $10 each. The tubes, which can also be used for amplifying and transmitting, will be a big improvement over the crystal detectors and spark transmitting sets now in use. Heretofore the Radio Corporation has refused to sell its tubes except to amateurs and for experimental use.

[fols. 237 & 238] PLAINTIFFS' EXHIBIT No. 21, SHEET 12

(Telephone—Sept. 16, 1922, page 21)

(Omitted here—See sheet 16 of this Exhibit on page 245.)

Much not the Rally-Switch deep, and doth not the Kat of T.D.M. scratch most woefully? And many men fell on both sides and for a time the Amateurs did not prosper since they were few in number against the great host of the Amalekites arrayed against them.

Then spake the Great Antennius, Chief of Radio, unto his Traffic Manager and said unto him, "Put thou it into the hearts of mine earthly agents, the Department of Commerce, to help these struggling Amateurs against this plague which I in my folly have laid upon them, by laws which shall wisely and justly control these broadcasting stations. Put thou it also into the hearts of the Amateurs that they must refrain from pounding upon their keys during the first watch of the night since it is evident that the listeners, it matteth not how nutty, must also have their time."

And it was so. The earthly agents of the Great Antennius did wisely and justly control the Broadcasting Stations and the Amateurs did stand by (and some even enjoy the concerts) during the first watch and then after most of the listeners were tucked in their beds, traffic flowed as usual during the rest of the night watches although there still remained some misguided persons on both sides who stubbornly maintained that the other belongeth entirely to them. But the Great and Terrible Wouff-Hong that squelcheth all things evil will surely squelch them in time—so wherefore worry? And as runneth the prophesy from NAA in the noontide watch—"The indications are for generally fair weather throughout the United States except for scattered thunder storms in some portions."

More omnia vincit—which meaneth in the language of the Ancient Men of Latium, "Long live Amateur Radio!"

Amplifier Operation from A.C. Supply

By P. D. Lowell*

For years we have been looking forward to the day when we could operate our tube equipment from the A.C. house-lighting supply. Early attempts in this direction were not very encouraging, the resultant hum ranging in many instances into ear-splitting ear-ruption. Recently, however, considerable progress has been made towards a solution and it is safe to assume that the day of its perfection is not far removed. In this article, reprinted from the *July* issue of the *Journal* of the American Institute of Electrical Engineers with the kind permission of the Institute, Mr. Lowell describes the latest known progress in America in this direction.—Editor.

ELECTRON tube amplifiers now form an important part of practically all radio receiving sets, except the most simple types. Such amplifiers are in fact necessary to receive distant stations, or when using coil antennas. For good operation, amplifier tubes require for the filament a source of voltage of very constant value (usually about 6 volts) and for the plate a source of voltage of from 60 to perhaps 300 volts. The filament voltage is usually supplied by storage cells, and the plate voltage by dry cells. The maintenance of these cells in operating condition, especially the storage cells, is often a source of much difficulty and annoyance. The storage cells are necessarily bulky and heavy, require constant attention to maintain proper charge and density of electrolyte, give of injurious acid or other fumes, and are subject to considerable variations of voltage during the period of discharge. The development of an amplifier which can be supplied from the ordinary 110-volt, a-c. lighting mains is of considerable practical importance, since it would eliminate the practical difficulties of maintaining storage cells. The amplifier using such a-c. supply has the important advantages of reliability, convenience, and cheapness both in first cost and operating cost.

Such an amplifier using five stages of amplification has been developed at the Bureau of Standards. There are three

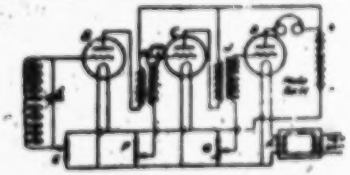

Fig. 1 Two-Stage Amplifier Circuit, using Tube Detector

stages of radio-frequency amplification and two stages of audio-frequency amplification. It is the purpose of this note to describe briefly this amplifier.

The first arrangement tried consisted of one radio-frequency stage of amplification, detector and one audio-frequency stage. The filaments of the three tubes were lighted by 6 volts supplied by a step-down transformer, the primary of which was connected to the 110-volt, 60-cycle power mains. The circuit is shown in Fig. 1.

In Fig. 1, the filament lighting transformer is shown at *A*, supplying voltage for the filaments of electron tubes *B*, *C* and *D*. The amplifier input circuit is connected to the grid of tube *B* and to the slider of the balancing resistance *E*, the latter having a resistance of 200 ohms and being connected across the filament line. A radio-frequency transformer is shown at *H*, a balancing resistance at *F*, an audio-frequency transformer at *J*, and another balancing resistance at *G*. The purpose of the balancing resistances *E*, *F*, *G*, is to keep the normal voltage of the grids at a steady value with respect to the average voltage of the electrical midpoint of the filament so that to eliminate the hum which variations of the grid voltage would cause. These balancing resistances are adjusted until the hum is eliminated. Reception was accomplished with this circuit but there was considerable 60-cycle hum present in spite of the beneficial effect of the balancing resistances.

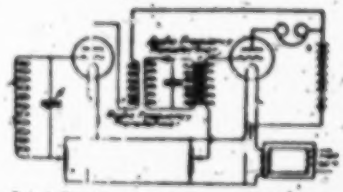

Fig. 2 Two Stage Amplifier using Crystal Detector

The employment of a crystal detector in place of the electron-tube detector reduced the 60-cycle hum very considerably. This circuit is shown in Fig. 2.

When an electron tube is used as the detector, there is impressed on both the plate and the filament a 60-cycle a-c. voltage which, although small, becomes very objectionable when amplified by one or two stages of audio-frequency amplification. When the crystal detector is used, no 60-cycle voltage is supplied to the detector circuit. The radio-frequency transformer whose output is delivered to the detector circuit prevents the passage in any appreciable amount of 60-cycle current supplied to the radio-frequency stage, and such voltages are not present in the crystal detector circuit and do not reach the input of the audio frequency stage.

The employment of a crystal detector may at first seem objectionable, since with the crystal as ordinarily used it is rather difficult to find a point of good sensitivity. But tests on this amplifier showed that a careful adjustment of the crystal detector was not necessary because the radio-frequency amplification preceding the detector usually gave sufficient signal strength so that a point of sufficient sensitivity could be easily found.

This circuit gave quite good results. The 60-cycle hum was practically eliminated and the crystal detector gave almost as good rectification as the tube detector.

It was found that better amplifying

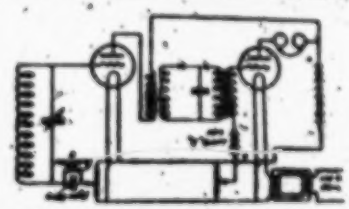

Fig. 3 Two-Stage Amplifier using Crystal Detector, with grid condensers for audio stages and grid battery for audio stages

action could be obtained by inserting condensers of about 0.01 microfarad capacity, shunted by 5-megohm grid leak resistances, in the grid circuits, in series with the sliders of the balancing resistances. The grid condensers and grid leak resistances allow the grids to assume a normal voltage which is more favorable for amplifying purposes. The leak resistances allow any accumulated charge on the grids to leak off to the filaments. Still better amplification and quieter operation was produced by replacing the series grid condenser and leak in the audio stage with a 10 volt battery giving a negative charge to the grid. A battery of dry cells was used for this purpose; since only an extremely small current is required, the life of the dry cells is practically their shelf life. This gave a circuit as shown in Fig. 3.

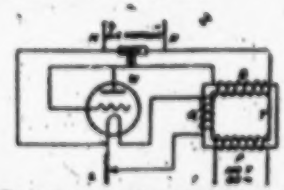

Fig. 4 Rectifier Circuit for Plate Voltage Supply

Alternating current rectified by means of a gas-filled two-element rectifier tube (a "Tungar" tube) was tried as a source of filament power but the residual hum was much greater than when unrectified alter-

PLAINTIFFS' EXHIBIT NO. 21, SHEET 13,
(Q.S.T. Oct., 1922, Pages 32 and 33)
239-240
6613

nating current was used. This is because of the fact that during rectification, the wave form becomes distorted and it becomes impossible to stabilize the grid voltage by means of the balancing resistances.

In the above mentioned tests, a plate battery was used for convenience, but this was replaced by alternating current which had been rectified by means of an electron tube and smoothed out with condensers of large capacity. The rectification circuit for the plate voltage supply is shown in Fig. 4.

In Fig. 4 the primary *P* of the transformer *T* is connected to the power mains, and winding *R* gives 8 volts for the filament of the rectifier tube *W*. Winding *S* gives 300 volts which is rectified by the tube *W* and smoothed out by the condenser *Q*, which has about 10 microfarads capacity. This gives at terminals *M* and *N* a high-voltage direct current which is quite suitable for use on the plates of the amplifier tubes. Rheostat *X* varies the brilliancy of the filament of the rectifier tube and, simultaneously, the voltage for the plates.

The use of a loud-speaking telephone receiver such as the "Magnavox" was made possible by applying to the field coil of the loud speaker an alternating current rectified by a "Tungar" rectifier tube. The impedance of the field coil was sufficient to smooth out the pulsating current to such an extent that the hum was not annoying. It was also advantageous to couple the loud-speaking reproducer circuit to the plate circuit of the last amplifier tube by means of a one-to-one ratio telephone transformer with a 0.02-microfarad condenser in series with the telephone circuit. This helped considerably to reduce the residual hum in the telephones.

The final circuit is shown in Fig. 5, and includes three stages of radio-frequency amplification, galena crystal detector, two stages of audio-frequency amplification, loud-speaking reproducer, and the necessary power transformer and rectifying circuits.

This final circuit gives good amplification, with a slight residual hum which is not great enough to be objectionable when receiving signals of ordinary readable strength. The residual hum is of course more objectionable when extremely weak signals are being received. Radio telephone music and conversation are clearly reproduced.

The amplifier was operated under normal conditions using the usual sources of direct-current supply, and then switched over to alternating-current supply. This comparative test showed the a-c supply to give as good amplification as the d-c. supply.

For the reception of damped waves, the amplifier as constructed operated most satisfactorily for frequencies from 400 kilocycles to 1500 kilocycles per second (750 to 200 meters). This frequency range was determined by the working range of the radio-frequency transformers used. By using suitable radio-frequency transformers, it is expected that the amplifier will be effective for the reception of damped waves for frequencies as low as 30 kilocycles (10,000 meters). This amplifier has also been found effective for the reception of undamped waves, when used with a separate heterodyne.

The special transformer with five windings and the rectifier tube were assembled in one box, and the amplifier tubes and amplifier transformers and other apparatus were assembled in a separate box. This was done to avoid having the amplifier immediately adjacent to the special transformer, from which it would pick up considerable 60-cycle hum. The assembled rectifier unit measured about 8 in. by 8 in. by 9 in. and weighed about 21 pounds. The assembled amplifier unit measured about 8 in. by 11 in. by 14 in. and weighed about 21 pounds.

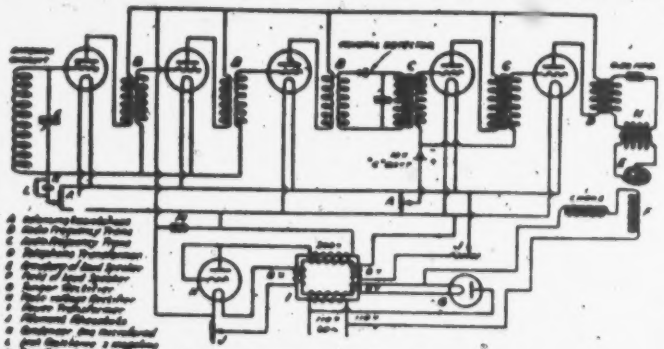

Fig 5 Final Complete Circuit of Five-Stage Amplifier using Crystal Detector using 60 cycle alternating current to supply power for the filaments and plates.

Mr. F. W. Dunmore was a co-worker and participated in the development of this instrument. The author wishes to acknowledge his indebtedness to Mr. E. E. Bucher for helpful suggestions in preparing this paper.

A Week in Baltimore With Portable Station 3OI

By John Evans, jr., 3AQG

At the June meeting of the Chester County Radio Association, Yours Truly was resting easy after making a report that the association had at the present time over 125 members and was growing. Then out of a clear sky the meeting was informed that 3OI was to go to Baltimore for the week of June 10-15th inclusive, to be placed in the Fifth Regiment Armory under the auspices of the Maryland Radio Association for participation in the Export and Import Exposition to be held there on those dates.

Several days later a phone message from headquarters took me to Parkesburg and after two weeks of work which included painting, scrubbing, wiring, testing, etc., portable station 3OI hit the roads for Baltimore, at 10:10 A.M. Saturday, July 8th. Four miles of dusty road put a coat of tan on the sturdy shack. Everything went well until Nottingham, Pa., was slightly in the distance, then the engine on the truck refused to percolate. We found the gasoline feed to the carburetor broken completely off. The sun was shining brightly and, take it or leave it, it was some walk up the pike to the nearest garage. After three precious hours of tinkering we started off again.

It might be well to mention right here that the truck from the ground to the top of the shack measures 13 feet 6 inches, which necessitated careful watch on limbs of trees and other things overhead. At Gilpin Falls, Md., we encountered a covered bridge, which took off a piece of our roof. Everything went fairly well but of course slowly until we landed in Baltimore about 12:30 A.M. Sunday.

Our directions were anything but specific and after traveling up and down Charles and Gay Streets several times, we found a haven in the Central Police Station, where a pay-telephone was our only hope. After making a dozen calls I found it was impossible to get the truck into the Armory that night. Then after making a round of the city and looking over fifteen or more garages we finally found one to accommodate her height and parked her for the night. The driver and I then found a hotel and hit the hay for a much needed rest.

In the morning on going to the Armory we were cordially met by the Third District Council President, Mr. E. E. Bucher, who was so anxious to see 3OI again and her in the booth that we had to go to the garage at once and bring her around to the Armory. More hard luck awaited us. We found that the clearance of the Armory door was not sufficient for her to get in. Since a cottage on wheels will not shrink as easily as a radio man's pocketbook, it was necessary for us to get riggers to remove the house from the chassis and put it in position on the Armory floor. This feat took practically all day Sunday.

On Monday morning I took up the task of putting the batteries and other paraphernalia together, also had the house cleaned inside and outside. Monday seemed to speed along and when the Exposition opened at 7:00 P.M. everything was in readiness and the crowd eagerly awaited the first selection from our radiophone transmitter.

I will state here that the Hall was well supplied with radio receiving apparatus. All of the stations excepting one were equipped with Magnavox reproducing devices, and the other one had a real Western Electric loud speaker that barked a message that was echoed and re-echoed throughout the Armory.

The transmitting equipment in 3OI includes a 20-watt DeForest transmitter which is used for key work and a special two ½-watt tube radiophone transmitter (3ZO-built) employing the Appleby-Heising modulating scheme. This set was driven by either 420 volts storage battery or a 500 volt motor generator, and was the set which was used practically all of the time we were in Baltimore.

The interest of the crowd seemed to center about 3OI—no doubt because it is something the public rarely sees—a radio broadcasting station in full operation; also because of the careful designing of the apparatus and the well-arranged interior of the station. In order to estimate the number of visitors who came into the station on Friday night we asked them to sign their names in a book. This book is now

PLAINTIFFS' EXHIBIT NO. 21, SHEET 14, (Q.S.T. Oct. 1922, Pages 34 and 35) 241— 614 242

PLAINTIFFS' EXHIBIT No. 21, Sheet 15
(Radio News, Sept. 1922, Page 441)
243—
244

Radio News for September, 1922

Discarding Storage Batteries

By S. R. WINTERS

THE unwieldy storage battery, heretofore considered an integral part of radiotelephone receiving apparatus, may be discarded in the future and another source of electric current tapped effectively. An electron-tube amplifier, employing a 60-cycle alternating current in supplying impulses to both filaments and plates of the vacuum tubes, has been designed by P. D. Lowell of the Radio Communication Section of the Bureau of Standards, United States Department of Commerce. Elimination of storage batteries is possible by forming contact with a common electric-lamp socket.

The newly-designed amplifier, in the absence of which the use of storage batteries is not obviated, is provided with three stages of radio-frequency and two of audio-frequency. A crystal detector is used in this system instead of an electron-tube detector. Amplification derived from the use of an alternating electric current is quite as effective as when direct current is employed. The complete outfit for the reception of radio-telephone communications is compactly built and may be readily transported from one place to another. The experimental unit, as originally designed by the Radio-Communication Section of the Bureau of Standards, operates effectively when adjusted to wave-lengths ranging from 200 to 750 meters. These wave-length restrictions can be removed or expanded by the application of suitable radio-frequency transformers. The new amplifier may be used with any type of antenna.

The distracting hum or the din of noise from alternating electric current when substituting for storage batteries in previous experimental efforts to discard the latter has been the bane of all such attempts. The system evolved by the Bureau of Standards, if we are to accept the usual conservative claims of this government department, has

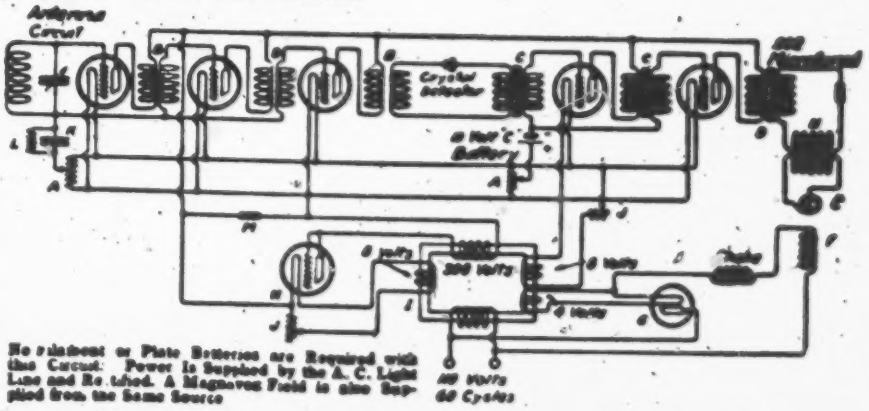

No Filament or Plate Batteries are Required with this Circuit. Power is Supplied by the A. C. Light Line and Rectified. A Magnavox Field is also Supplied from the Same Source

been reduced to a minimum. The humming noise in the final analysis is not distracting. To accomplish this end, wireless amateurs who may attempt to duplicate the amplifier conceived by this government bureau, will find it necessary to manipulate a larger number of adjustments than when employing a conventional amplifier, whose source of strength is the storage battery.

A 60-cycle alternating current when applied to the service of an ordinary amplifying circuit introduces such a robust note in the telephone receivers as to render reception impossible. This condition, in the system being described, is well-nigh obviated by an arrangement involving the use of balancing resistances, grid condensers, and special grid-leaks of relatively low resistance, telephone transformer in the output circuit, and the employment of a crystal detector instead of a vacuum tube in this capacity.

The newly-conceived electron-tube amplifier, instead of employing a storage battery for lighting the filament and a dry battery as a source of strength for the plate circuit, substitutes therefor a special transformer and an electron-tube rectifier, as well as other accessories. The bulk and weight of these combined units are less than that of storage batteries. A small 10-volt dry battery is used in the grid circuit the obligation imposed on this source of electricity being only to deliver an infinite-simally small current. The life of this battery is reasonably assured for several months. The parts utilized in this electron-tube amplifier in replacement of the storage battery may be obtained at a moderate cost. The specially-designed transformer is the only unit that approaches in financial investment that involved in obtaining a storage battery. The labor of assembling is the outstanding consideration in acquiring this transformer.

Bulkiness, its weight in pounds, the necessity of charging periodically, and the acid contained therein both as a source of danger and damage to household or office, are the items in the bill of indictment preferred against the storage battery. Some individuals would go so far as to issue a blanket indictment against this source of electric strength as being responsible for retarding the unrestrained development of the radio-telephone as a household utility.

The bulkiness and weight of the storage battery, assuredly, have retarded progress in the direction of compactness in portable radio-telephone and radio-telegraph receiving outfits. A striking example in the mind of the writer is a portable wireless set recently developed by the Signal Corps of the United States Army. As now constituted, the apparatus can be strapped on the shoulders of two men and carried afield, irrespective of the rugged conditions encountered. The carriage of the storage batteries involves the services of one person. By the elimination of this cumbersome unit, it would be possible for one man to transport this equipment from place to place.

The electron-tube amplifier described in this article may, or may not, signify the elimination of storage batteries. The Bureau of Standards admits that its progeny is in an experimental stage. Anyway, a start has been made. P. D. Lowell, the inventor of this electron-tube amplifier, has

Discarding Storage Batteries

By S. R. WINTERS

THE unwieldy storage battery, heretofore considered an integral part of radiotelephone receiving apparatus, may be discarded in the future and another source of electric current tapped effectively. An electron-tube amplifier, employing a 60-cycle alternating current in supplying impulses to both filaments and plates of the vacuum tubes, has been designed by P. D. Lowell of the Radio Communication Section of the Bureau of Standards, United States Department of Commerce. Elimination of storage batteries is possible by forming contact with a common electric-lamp socket.

The newly-designed amplifier, in the absence of which the use of storage batteries is not obviated, is provided with three stages of radio-frequency and two of audio-frequency. A crystal detector is used in this system instead of an electron-tube detector. Amplification derived from the use of an alternating electric current is quite as effective as when direct current is employed. The complete outfit for the reception of radio-telephone communications is compactly built and may be readily transported from one place to another. The experimental unit as originally designed by the Radio Communication Section of the Bureau of Standards, operates effectively when adjusted to wave-lengths ranging from 200 to 750 meters. These wave-length restrictions can be removed or expanded by the application of suitable radio-frequency transformers. The new amplifier may be used with any type of antenna.

The distracting hum or the din of noise from alternating electric current when substituting for storage batteries in previous experimental efforts to discard the latter has been the bane of all such attempts. The system evolved by the Bureau of Standards, if we are to accept the usual conservative claims of this government department, has

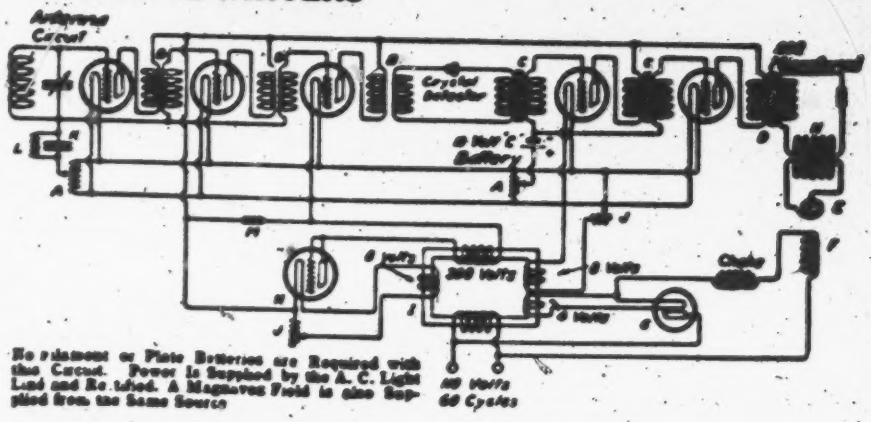

No Filament or Plate Batteries are Required with this Circuit. Power is Supplied by the A. C. Light Line and Rectified. A Magnetron Field is also Supplied from the Same Source

been reduced to a minimum. The humming noise in the final analysis is not distracting. To accomplish this end, wireless amateurs who may attempt to duplicate the amplifier conceived by this government bureau, will find it necessary to manipulate a larger number of adjustments than when employing a conventional amplifier, whose source of strength is the storage battery.

A 60-cycle alternating current when applied to the service of an ordinary amplifying circuit introduces such a robust note in the telephone receivers as to render reception impossible. This condition, in the system being described, is well-nigh obviated by an arrangement involving the use of balancing resistances, grid condensers, and special grid-leaks of relatively low resistance, telephone transformer in the output circuit, and the employment of a crystal detector instead of a vacuum tube in this capacity.

The newly-conceived electron-tube amplifier, instead of employing a storage battery for lighting the filament and a dry battery as a source of strength for the plate circuit, substitutes therefor a special transformer and an electron-tube rectifier, as well as other accessories. The bulk and weight of these combined units are less than that of storage batteries. A small 10-volt dry battery is used in the grid circuit, the obligation imposed on this source of electricity being only to deliver an infinitesimally small current. The life of this battery is reasonably assured for several months. The parts utilized in this electron-tube amplifier in replacement of the storage battery may be obtained at a moderate cost. The specially-designed transformer is the only unit that approaches in financial investment that involved in obtaining a storage battery. The labor of assembling is the outstanding consideration in acquiring this transformer.

Bulkiness, its weight in pounds, the necessity of charging periodically, and the acid contained therein both as a source of danger and damage to household or office, are the items in the bill of indictment preferred against the storage battery. Some individuals would go so far as to issue a blanket indictment against this source of electric strength as being responsible for retarding the unrestrained development of the radio-telephone as a household utility.

The bulkiness and weight of the storage battery, assuredly, have retarded progress in the direction of compactness in portable radio-telephone and radio-telegraph receiving outfits. A striking example in the mind of the writer is a portable wireless set recently developed by the Signal Corps of the United States Army. As now constituted, the apparatus can be strapped on the shoulders of two men and carried afield, irrespective of the rugged conditions encountered. The carriage of the storage batteries involves the services of one person. By the elimination of this cumbersome unit, it would be possible for one man to transport this equipment from place to place.

The electron-tube amplifier described in this article may, or may not, signify the elimination of storage batteries. The Bureau of Standards admits that its progeny is in an experimental stage. Anyway, a start has been made. P. D. Lowell, the inventor of this electron-tube amplifier, has a predilection for designing wireless units neat and compact in formation. He conceived the idea of converting a common suit-case into a complete radio-receiving outfit, which original conception was first described by this writer in RADIO NEWS of September, 1921. "Radio in a Suit-Case," is a phrase that is fascinating and the idea is now being widely translated into reality. The germ of this compact radio formation had its inception with P. D. Lowell of the Radio Section of the Bureau of Standards.

TEXT IS VERY POOR

PLAINTIFFS' EXHIBIT No. 21, Sheet 16
(Telephone- September 16, 1922, Page 21)

245—246

Batteryless Radio Receiving Set

Notes on Electron Tube Amplifier Which Uses 60-Cycle Alternating Current to Supply Power for Filaments and Plates—Paper Giving Circuit Diagrams Published in Journal of the American Institute of Electrical Engineers

By P. D. Lowell,
Associate Physicist, Bureau of Standards

Electron tube amplifiers now form an important part of practically all radio receiving sets, except the most simple types. Such amplifiers are in fact necessary to receive distant stations, or when using coil

For good operation, amplifier tubes require the filament a source of voltage of constant value (usually about 6 volts) and for the plate a source of voltage which is to be changed (90 volts). The filament voltage is usually supplied by storage cells, and the plate voltage by dry

The maintenance of these cells in operating condition, especially the storage cells, is often a source of much difficulty and expense. The storage cells are bulky and heavy, require constant attention to maintain proper charge and specific gravity of electrolyte, give off injurious gases at times, and are subject to wide variations of voltage during a period of discharge.

The development of an amplifier which can be supplied from the ordinary 110-volt 60-cycle alternating current lighting mains is of considerable practical importance, since it would eliminate the practical difficulties of maintaining storage cells. The amplifier using alternating current supply has the great advantages of reliability, economy and cleanliness both in first cost and operating cost.

An amplifier using five stages of amplification has been developed at the Bureau of Standards. There are three stages of radio-frequency amplification and two stages of audio-frequency amplification transformer, the primary of which was connected to the 110-volt, 60-cycle power mains. The circuit is shown in Fig. 1.

In Fig. 1, the filament lighting transformer is shown at *A*, supplying voltage for the filaments of electron tubes *B*, *C*, and *D*. The amplifier input circuit is connected to the grid of tube *B* and to the slider of the balancing resistance *E*, the latter having a resistance of 200 ohms and being connected across the filament line.

A radio-frequency transformer is shown at *H*, a balancing resistance at *F*, an audio-frequency transformer at *J*, and another balancing resistance at *G*. The purpose of the balancing resistances, *E*, *F*, *G*, is to keep the normal voltage of the grids at a steady value with respect to the average voltage of the electrical midpoint of the filament and thus to eliminate the hum which variations of the grid voltage would cause. These balancing resistances are adjusted until the hum is eliminated.

Reception was accomplished with this circuit but there was considerable 60-cycle hum present in spite of the beneficial effect of the balancing resistances.

The employment of a crystal detector in place of the electron tube detector reduced the 60-cycle hum very considerably. This circuit is shown in Fig. 2.

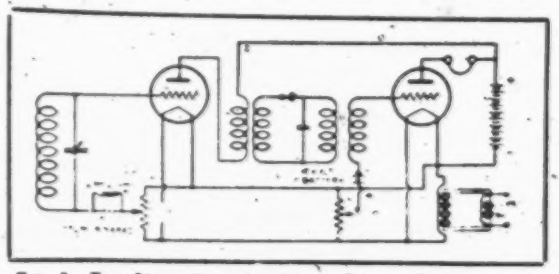

Fig. 3. Two-Stage Amplifier Using Crystal Detector with Grid Condenser for Radio Stages and Grid Battery for Audio Stages.

If no radio-frequency transformer is used, no 60-cycle voltage is supplied to the detector circuit.

The radio-frequency transformer whose output is delivered to the detector circuit prevents the passage in any appreciable amount of 60-cycle current supplied to the radio-frequency stage, and such voltages are not present in the crystal detector circuit and do not react on the input of the audio-frequency stage.

The employment of a crystal detector may at first seem objectionable, since with the crystal as ordinarily used it is rather difficult to find a point of good sensitivity. But tests on the amplifier showed that careful adjustment of the crystal detector was not necessary because the radio-frequency amplification preceding the detector usually gave sufficiently strong signals so that a point of sufficient sensitivity could be easily found.

This circuit gave quite good results. The 60-cycle hum was practically eliminated and the crystal detector gave almost

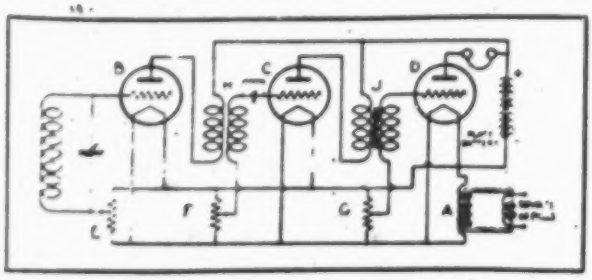

Fig. 1. Two-Stage Amplifier Circuit Using Tube Detector.

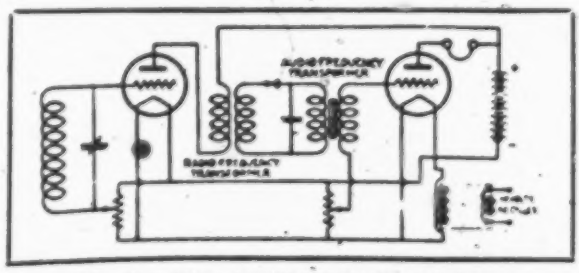

Fig. 2. Two-Stage Amplifier Using Crystal Detector.

It is the purpose of this note to describe briefly this amplifier.

The first arrangement tried consisted of one radio-frequency stage of amplification, one detector and one audio-frequency stage. The filaments of the three tubes were supplied by 6 volts supplied by a step-down

When an electron tube is used as the detector there is impressed on both the plate and the filament a 60-cycle alternating current voltage which, although small, becomes very objectionable when amplified by one or two stages of audio-frequency amplification. When the crystal detector is used there is practically no 60-cycle voltage impressed on the detector, and consequently no 60-cycle hum. The crystal detector also has the advantage that it gives as good rectification as the tube detector.

It was found that better amplification could be obtained by inserting condensers of about 0.02 microfarad capacity, shunted by 2-megohm grid leak resistances, in the grid circuits, in series with the sliders of the balancing resistances.

The grid condensers and grid leak resistances allow the grids to assume a normal voltage which is more favorable for amplifying purposes. The leak resistances allow any accumulated charge on the grids to leak off to the filaments.

Still better amplification and quieter operation was produced by replacing the series grid condenser and leak in the audio stage with a 10-volt battery giving a negative charge to the grid. A battery of dry cells was used for this purpose; since only an extremely small current is required, the life of the dry cells is practically their shelf life. This gave a circuit as shown in Fig. 3.

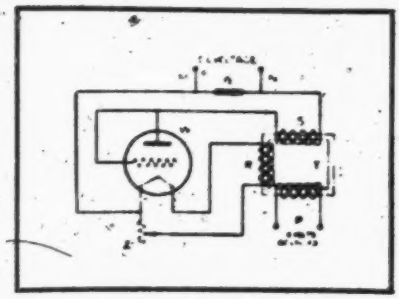

Fig. 4. Rectification Circuit for Plate Voltage Supply.

Alternating current rectified by means of a gas-filled, two-element rectifier tube (a "Tungar" tube) was tried as a source of filament power but the residual hum was much greater than when unrectified alternating current was used. This is because of the fact that during rectification the wave form becomes distorted and it becomes impossible to stabilize the grid voltage by means of the balancing resistances.

In these tests, a plate battery was used for convenience, but this was replaced by alternating current which had been rectified by means of an electron tube and smoothed out with condensers of large capacity. The rectification circuit for the plate voltage supply is shown in Fig. 4.

In Fig. 4, the primary, *P*, of the transformer, *T*, is connected to the power mains, and winding, *F*, gives 8 volts for the filament of the rectifier tube, *R*. Winding *S* gives 300 volts which is rectified by the tube, *R*, and smoothed out by the condenser, *O*, which has about 10 microfarads capacity.

This gives at terminals, *M* and *N*, a high-voltage direct current which is quite suitable for use on the plates of the amplifier tubes. Rheostat *Z* varies the brilliancy of the filament of the rectifier tube and, simultaneously, the voltage for the plates.

The use of a loud-speaking telephone receiver such as the "Magnavox" was made possible by applying to the field coil of the loud speaker an alternating current rectified by a "Tungar" rectifier tube. The impedance of the field coil was sufficient to smooth out the pulsating current to such an extent that the hum was not annoying.

It was also advantageous to couple the loud-speaking reproducer circuit to the plate circuit of the last amplifier tube by means of a one-to-one ratio telephone transformer with a 0.02 microfarad condenser in series with the telephone circuit. This helped considerably to reduce the residual hum in the telephones.

The final circuit is shown in Fig. 5, and includes three stages of radio-frequency amplification, galena crystal detector, two stages of audio-frequency amplification, loud-speaking reproducer, and the necessary power transformer and rectification circuits.

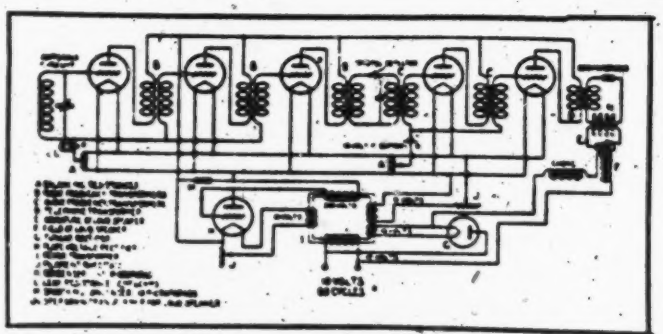

Fig. 5. Final Complete Circuit of Five-Stage Amplifier Using Crystal Detector with 60-Cycle Alternating Current to Supply Power for the Filaments and Plates.

This final circuit gives good amplification, with a slight residual hum which is not great enough to be objectionable when receiving signals of ordinary readable strength. The residual hum is, of course, more objectionable when extremely weak signals are being received. Radiotelephone music and conversation are clearly reproduced.

The amplifier was operated under the usual normal conditions sources of direct-current supply, and then switched over to alternating-current supply. This comparative test showed the alternating-current supply to give as good amplification as the direct-current supply.

For the reception of damped waves the amplifier as constructed operates satisfactorily for frequencies from 10 kilocycles to 1,500 kilocycles per second (750 to 200 meters). This frequency range was determined by the wavelength range of the radio-frequency transformers used.

By using suitable radio-frequency transformers, it is expected that the amplifier will be effective for the reception of damped waves for frequencies as low as 20 kilocycles (15,000 meters). The amplifier has also been found effective for the reception of undamped waves, when used with a separate heterodyne.

The special transformer with five windings and the rectifier tube were assembled in one box, and the amplifier tubes, amplifier transformers and other parts were assembled in a separate box. This was done to avoid having the rectifier immediately adjacent to the audio transformer, from which we would pick up considerable 60-cycle hum.

The assembled rectifier unit measured about 8 ins. by 8 ins. by 9 ins. and weighed about 9 pounds. The assembled amplifier unit measured about 8 ins. by 11 ins. by 11 ins. and weighed about 21 pounds.

Fig. 6 shows the rectifier unit and the amplifier unit as assembled, with the plug to connect with the 60-cycle lighting current. A 6-inch rule is shown leaning against the rectifier unit.

F. W. Dunmore was associated with the worker and participated in the development of this instrument. The author is indebted to R. S. Ould for helpful suggestions in preparing this paper.

Fig. 6. Assembled Rectifier and Amplifier Units.

PLAINTIFFS' EXHIBIT No. 22,
(Photograph of Type B relay)

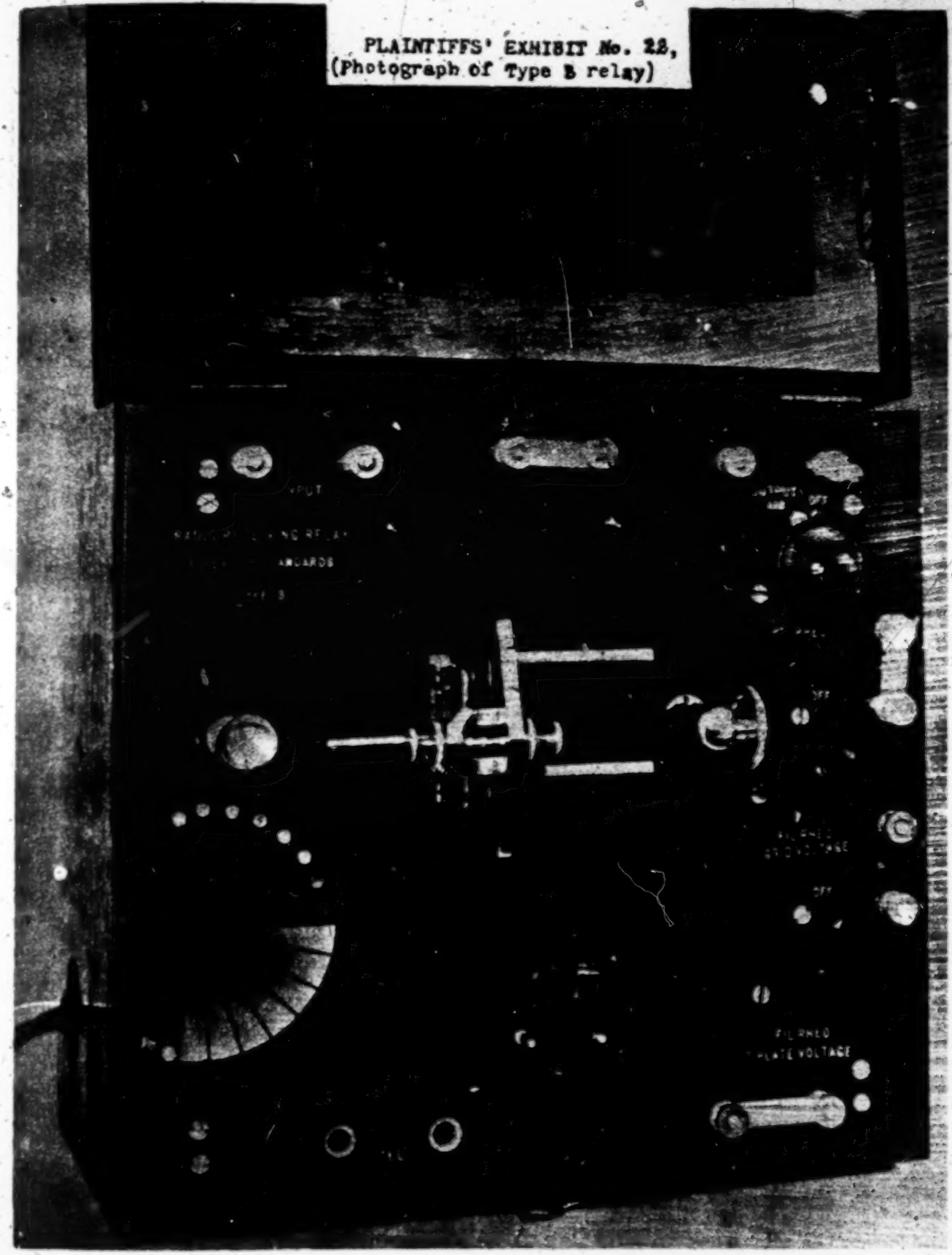

PLAINTIFFS' EXHIBIT NO. 29,
(Photograph of Dunmore's Laboratory at home)

FLAINTIFFS' EXHIBIT No. 47.
(Photograph of Box Type)

PLAINTIFFS' EXHIBIT No. 49, 255-256
(Photograph of Freed-Eisemann Set wired for A.C. and rectifier).

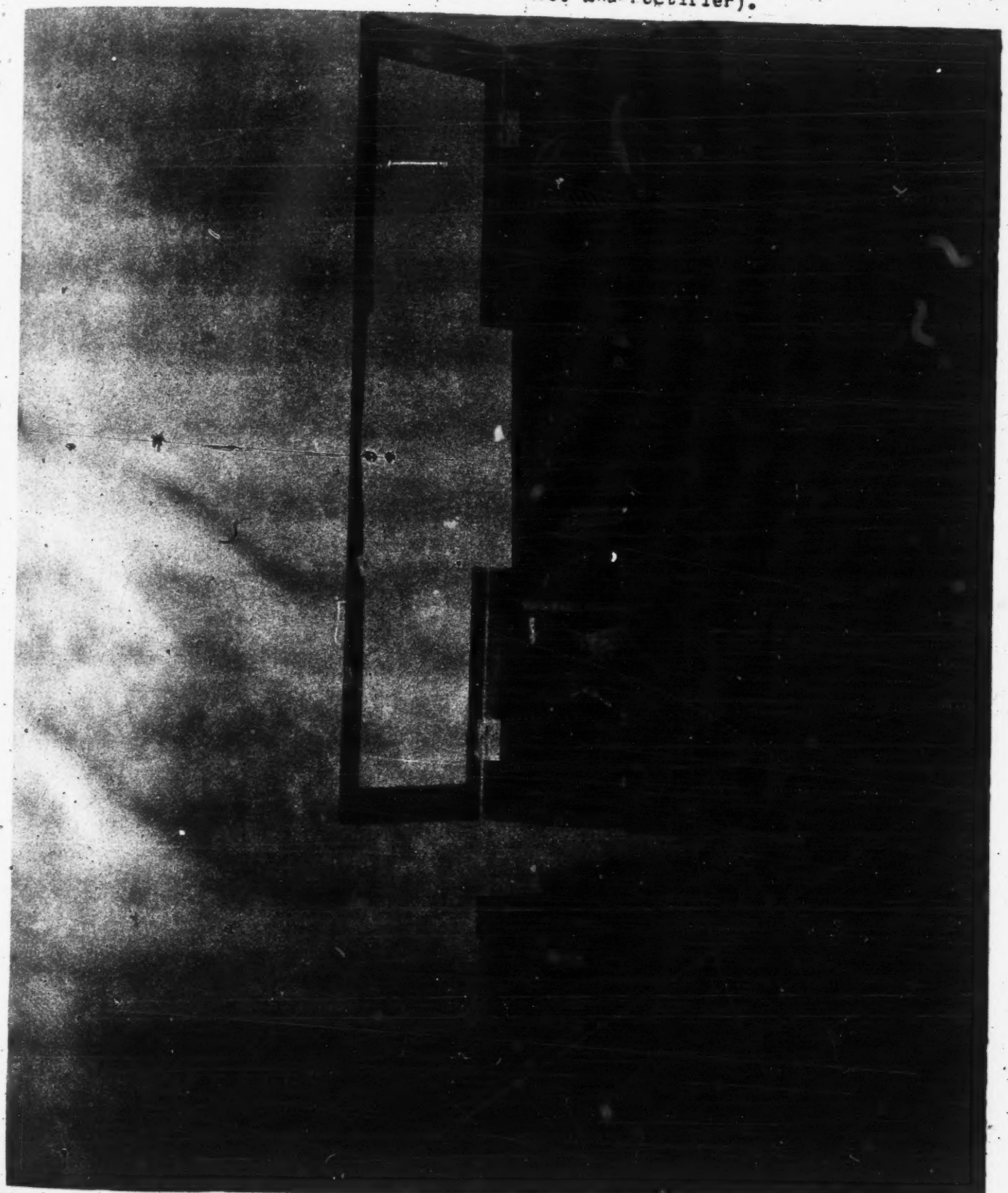

PLAINTIFFS' EXHIBIT No. 50,
(Diagram of Lowell & Dunmore box set)

187

Plaintiffs' Exhibit No. 50

Clerk.

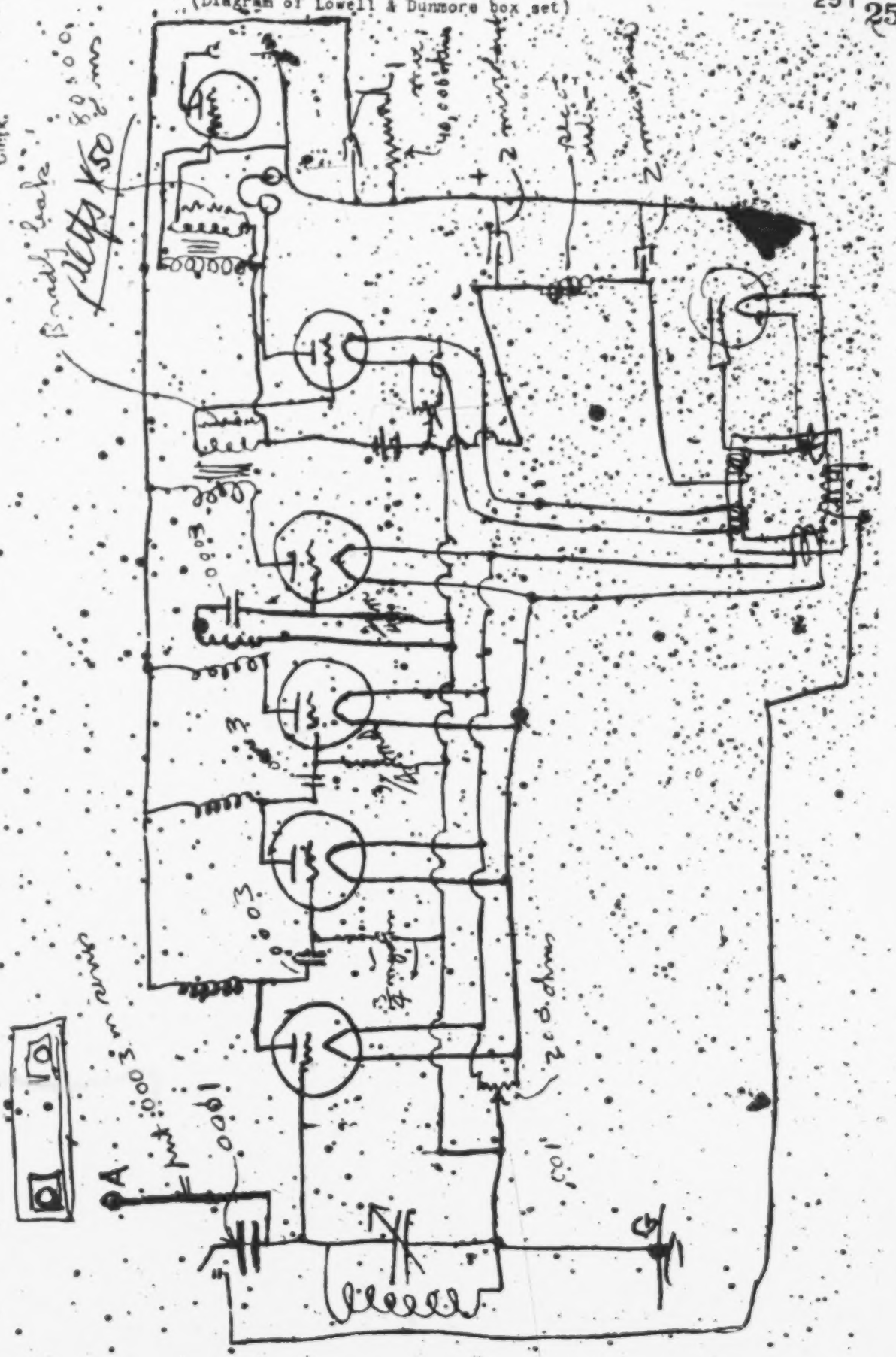
Brady Lake
KSO
40,000 ohms
2 megohms
2 megohms
.003
.001
.001
.1 meg
.1 meg
.1 meg

PLAINTIFFS' EXHIBIT NO. 53, Sheet 1
(A.I.E.E. Journal, April 1922, page 1.

A Relay Recorder for Remote Control by Radio

Pltfs X53

BY F. W. DUNMORE
Radio Laboratory, Bureau of Standards

Review of the Subject. *Relays have been used for many years in wire telegraphy and other electrical work. The practical operation of relays actuated by received radio signals is a comparatively recent development, and has been made possible by the development of the electron tube amplifier.*

This paper describes the development and the operating principles of a type of relay recorder which is designed to operate from the output terminals of a radio receiving set and which may also be operated by any other source of audio-frequency signal.

By the use of special electron tube circuits the audio-frequency signal is caused to operate an ordinary telegraph relay.

In order to avoid the necessity for using a very sensitive relay, designed to operate on currents of a milliampere or less, which would have delicate adjustments and light contacts and spring tension, advantage was taken of an electron tube amplifier, which has now become a reliable radio instrument, to increase the input voltage to the relay circuit thus making possible the use of a simple ordinary high-resistance telegraph relay. The relay device has therefore been developed to operate from the output circuit of any suitable amplifier in place of the ordinary telephone receivers.

The operation of the relay may serve to work a sounder, buzzer, tape register or any mechanism for remote control by radio.

Two types are described. One type is designed to be operated from batteries. The other type is designed to operate entirely from any 60-cycle 110-volt lighting circuit and this feature makes this type simple and inexpensive to operate, durable and practical. Another unique feature is described which is that of tuning to different audio-frequencies whereby any one of three signals, each of a different audio pitch, may be caused to operate the relay to the exclusion of the others.

Curves and diagrams are shown illustrating the principles of operation.

By the use of two of these relay recorders connected in series across the output terminals of a single radio receiving set, two messages sent on practically the same wave length but of different audio-frequencies, have been accurately received simultaneously.

CONTENTS

Type A—For Use With Batteries
1. Object of Development. (20 w.)
2. Requirements. (100 w.)
3. Circuit Used. (280 w.)
4. Principle of Operation. (275 w.)
5. Method of Increasing Sensitivity and Selectivity. (275 w.)
6. Speed of Operation. (75 w.)
7. Sensitivity. (100 w.)
8. Durability. (40 w.)
9. Portability. (25 w.)
10. Uses. (230 w.)

Type B—For Use on the 60-Cycle, 110-Volt, A-C. Supply. (320 w.)

Type A— For Use With Batteries

1. *Object of Development.* The object of this investigation was to develop a relay which should operate by received radio signals.

2. *Requirements.* To be satisfactory as a relay recorder the device should have the following characteristics: (1) it must be of simple construction, with few adjustments; (2) it must be easy to adjust and capable of being put into operation quickly; (3) it must be selective and as free from static and such disturbances as possible; (4) it must be capable of operating at a speed of at least 12 times per second; (5) it must respond to weak signals; (6) it must be of strong design, durable and capable of maintaining its adjustments; (7) it must be portable.

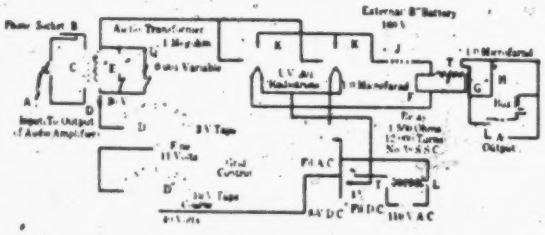

Fig. 1—Circuit Diagram of Relay Recorder for Use with Batteries

3. *Circuit Used.* In order to avoid the use of a very sensitive relay designed to operate on currents of a milliampere or less, with delicate adjustments and light contacts and spring tension, advantage was taken of the radio-audio amplifier (which has now become a reliable radio instrument) to increase the input voltage to the relay circuit, thus making possible the use of a simple ordinary high-resistance telegraph relay. The relay device has therefore been developed to operate from the output circuit of any suitable amplifier in place of the ordinary telephone receivers. The only adjustment necessary is that of an ordinary telegraph relay.

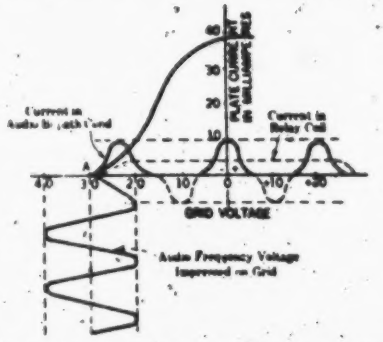

Fig. 2—Tube Characteristic Showing Principle of Operation of Relay Recorder

Fig. 1 shows the wiring diagram. *A* is a telephone plug for connecting the relay device to the amplifier output. *B* is a phone socket, so that if desired the operator may listen to the received-signal in the ordinary way. *C* is an audio transformer of the type used in audio amplifiers, the type used at present being a Signal Corps Type C-21. *E* is a two-megohm, grid leak.

To be presented at the Spring Convention of the A. I. E. E., Chicago, Ill., April 19-21, 1922.

PLAIRTIFFS' EXHIBIT No. 53, Sheet 2
(A.I.E.E.Journal, April 1922, Page 2)

Q is a 0.0006-microfarad variable condenser or 0.0003-microfarad fixed condenser. D is a 60-volt variable "C" battery variable in steps of approximately three volts. J is a 160-volt dry "B" battery self-contained within the set. K is a type UV-201 Radiotron. F and H are each a one-microfarad paper condenser. T is an ordinary telegraph relay rewound with 12,000 turns of number 38 S. S. C. enamel wire. A' is the output to be connected to the apparatus to be controlled. L is a step-down transformer for operating the tube filaments from the 110-volt a-c. supply when such a supply is available.

4. *Principle of Operation.* The principle of operation is illustrated in Fig. 2. By means of the variable "C" battery D, the grid voltage is adjusted to approximately 30 volts at which value the plate current is zero, as shown at A. The incoming audio-frequency voltage impressed on the grid varies the grid potential,

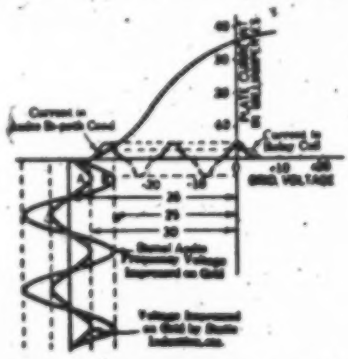

FIG. 3—METHOD OF ELIMINATING STATIC AND INDUCTION NOISES WHICH ARE NOT STRONGER THAN THE SIGNAL

for example, from − 30 to − 20 volts. The 10 volts decrease from − 30 to − 20 causes an increase, for example, from 0 to 10 milliamperes, while the increase from − 30 to − 40 volts is not effective in causing a plate current to flow due to the fact that − 30 volts is already sufficient to reduce the plate current to zero. The result will be a pulsating direct current of 10 milliamperes, maximum amplitude, in the plate circuit. This urrent, flowing through the plate circuit and condenser F causes an increase in the plate current at the keying frequency, which change, passing through the relay coil will pull the relay armature over, making contact at T, which contact may control any mechaniam desired. With the "C" battery grid voltage adjusted for maximum sensitivity it was found that static induction, etc., operated the relay. When these disturbances are not as strong as the signal their effect on the relay may be overcome as shown in Fig. 3. For example, the "C" battery is shown increased to − 35 volts, the critical value for maximum sensitivity being − 30 volts. The disturbances due to stray currents, etc., merely reduce the "C" battery voltage to − 30 which is not sufficient to cause plate current to flow. However, the signal, being of greater intensity than the stray currents, reduces the voltage to − 25 which causes a plate current of five milliamperes. It will be seen therefore that all disturbing effects, if of less intensity than the signal, do not affect the relay.

5. *Method of Increasing Sensitivity and Selectivity.* During the development of this relay it was found that the rectified audio-frequency current in the plate circuit caused the relay armature to chatter rapidly and make a poor contact with the fixed contact point through which the circuit is closed. This was overcome completely, however, by the addition of a one-microfarad condenser across the relay coils. This served the purpose of an audio-frequency by-path for the highly inductive winding of the relay, thus greatly decreasing the resistance of the circuit. The change of plate current due to this audio-frequency caused a second change which occurred at the keying frequency. This latter change passes readily through the relay coils and exerts a strong steady pull on the relay armature without the least chattering.

It was also found that the 0.0006-microfarad variable condenser, Fig. 1, across the secondary of the input audio transformer made possible audio tuning, which increased the selectivity considerable. This tuning was very sharp and it was found that European stations could be made to operate the relay while a high-power station here in the United States would fail to operate it, although the high-power station was coming in on the same wave length and slightly stronger. This was made possible by adjusting the heterodyne note of the European station to a frequency different from that of the local station and then tuning the secondary of the audio transformer to that frequency. The 0.0006-microfarad variable condenser may be replaced by a 0.0003-microfarad fixed condenser and the audio tuning accomplished by adjusting the heterodyne note to the resonant frequency. By means of this audio tuning one of three stations transmitting simultaneously has been selected and caused to operate the relay although all were of equal intensity.

By the use of two relay recorders connected in series across the output terminals of a single radio receiving set, two messages sent on practically the same wave length, but of different audio frequencies, have been accurately received simultaneously.

6. *Speed of Operation.* Tests showed that with a signal strength sufficient to produce a plate current of 10 milliamperes the relay could be operated at a speed of 48 contacts per second, the contact being sufficient to operate a buzzer. With three milliamperes in the plate circuit a speed of 27 contacts per second was obtained. With one milliampere a speed of 19 per second. In each case the relay armature spring tension was adjusted for the best operation.

7. *Sensitivity.* As stated above, this relay was designed primarily with the intention of obtaining a device which should be durable, simple in operation, and strong in construction. Sensitivity is obtained by

means of radio-audio amplification thereby increasing the voltage input to the relay circuit and eliminating the necessity of extreme sensitivity in the relay. Tests at 600 cycles showed that the relay circuit was fairly sensitive, as approximately 1.3 volts at the input terminals of the audio transformer in the relay circuit, caused a current of five milliamperes to flow through the relay coil in the plate circuit.

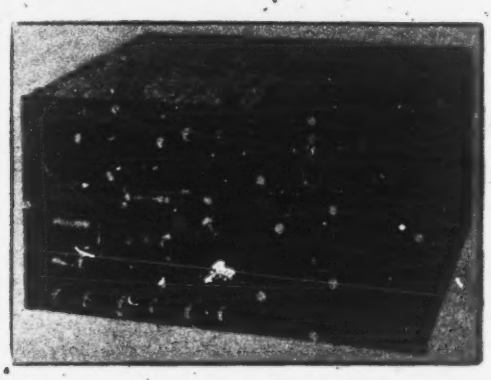

FIG. 4.—TYPE A RELAY RECORDER FOR USE WITH BATTERIES

8. *Durability.* As the relay instrument used in this recorder is of the ordinary telegraph type its durability is well established. The only elements requiring occasional renewal are the two electron tubes, the 60-volt "C" battery, and the 160-volt "B" battery.

9. *Portability.* The complete recorder with the exception of the filament lighting battery is contained in a cabinet 7 in. by 13 in. by 11 in., as shown in Fig. 4.

10. *Uses.* 1. As an ordinary receiver it has advantages over reception with telephone receivers, for one may receive by buzzer or sounder with all induction and interfering noises eliminated (if not louder than the signal.)

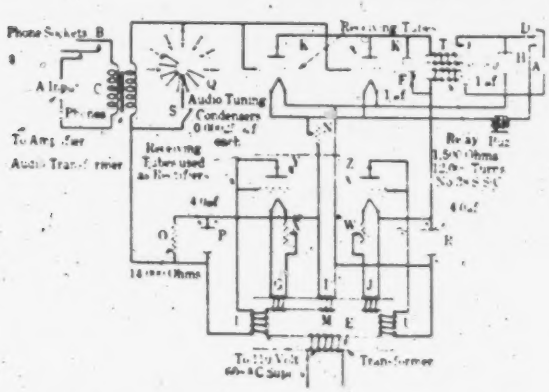

FIG. 5.—CIRCUIT DIAGRAM OF RELAY RECORDER FOR USE ON THE 110-VOLT A-C. SUPPLY

2. A tape or drum-type recorder may be used and a copy made without a trained radio operator.

3. Time signals may be recorded.

4. A call system may be worked by a time switch connected to close the filament circuit for a given time at set calling intervals.

5. Any form of mechanism may be operated by an incoming signal.

6. A receiving station may be located remotely from the transmitting station and the radio signals relayed by wire to the operating room some miles distant.

In conclusion it may be stated that a relay of this type should operate satisfactorily, *without attention*, on an airplane where mechanical vibration may be excessive as the pull on the armature with three milliamperes, or over, in the relay coil makes possible the use of a spring tension on the relay armature sufficient to keep it from moving due to mechanical vibration of the relay.

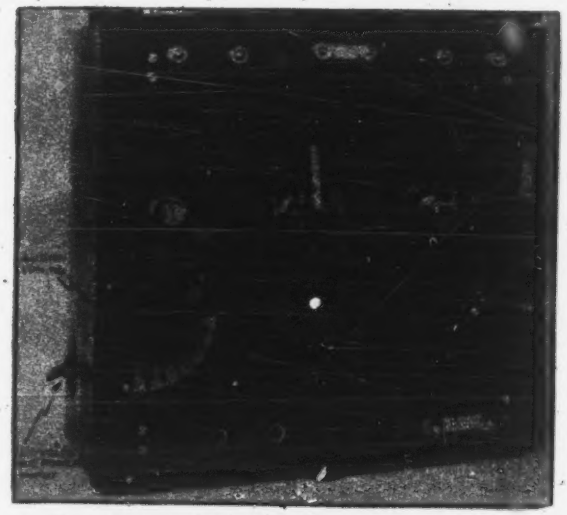

FIG. 6.—TYPE B RELAY RECORDER FOR USE ON THE 110-VOLT A-C. SUPPLY

It would seem that the above-mentioned feature makes this remote control relay more serviceable than those now on the market which require delicate adjustment of spring tension, contact points, and suspended vibrating elements.

TYPE B.—FOR USE ON THE 60-CYCLE, 110-VOLT, A-C. SUPPLY

This recorder is similar in construction and operation to the Type *A* recorder, except that the plate and grid voltages (B and C battery) are supplied from the 60-cycle, 110-volt a-c. supply. The current for operating the tube filaments is also obtained from this source, so that the recorder is operated entirely independent of any form of batteries. It is only necessary, therefore, to connect to the 110-volt a-c. line and the recorder is ready to operate.

The method of operating the recorder from the a-c. supply consists in the use of the two receiving tubes as rectifiers as shown in Fig. 5. The tubes *Y* and *Z* are used as half wave rectifiers, one supplying the plate voltage, and the other the grid voltage. When used

PLAINTIFFS' EXHIBIT No. 53, Sheet4
(A.I.E.E.Journal April 1922, Page 4.

as rectifiers, receiving tubes should have the grids and plates electrically connected together. A special transformer M with six windings is used. Two of the windings G and J, supply the filaments of the two rectifier tubes. A third, I, the filaments of the recorder tubes. A fourth, U, the high voltage for the plate. The fifth, L, supplies the grid voltage, and the sixth, E, is the 110-volt primary winding. The rectified alternating current is smoothed out by means of four microfarad condensers P and R, connected across the output terminals. As the currents in the grid and plate circuits are small, smoothing out inductance was found unnecessary. It was found necessary to put 40,000 ohms as shown at O, across the output circuit of the rectifier tube supplying the voltage to the grid, as the grid is otherwise insulated from the filament of tubes K by the rectifier tube. By means of the filament rheostats, X and W, the grid and plate voltages may be varied over any ranges desirable for the most efficient operation of the recorder. By the use of binding posts with straps as shown in Fig. 6, the type B recorder may be operated from A, B and C batteries for supplying the filament, plate and grid voltages respectively in cases where the a-c. supply is not available.

In cases where very high-speed operation is desired, the ordinary relay may be replaced by one designed for high-speed operation.

PLAINTIFFS' EXHIBIT NO. 53, SHEET 5, 267—268
Radio News for July, 1922 (Radio News July, 1922, Page 51) 51

A Relay Recorder for Remote Control by Radio

By F. W. DUNMORE*

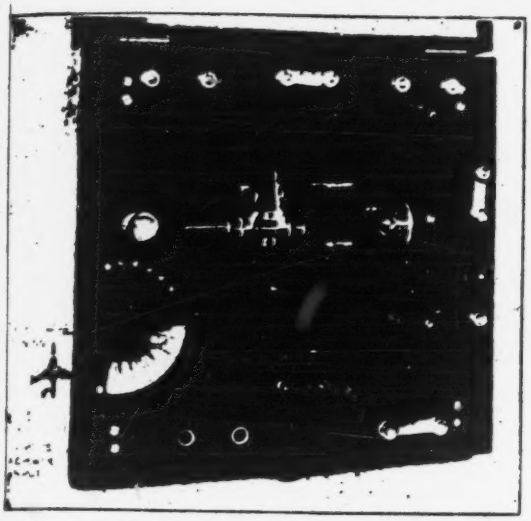

Fig. 6. Type B Relay Recorder for Use on the 110-Volt A. C. Supply

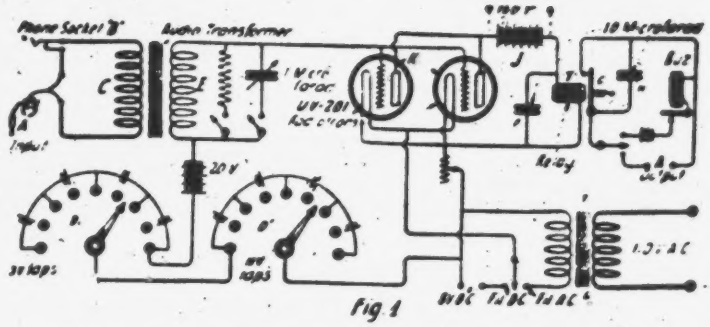

Fig. 1. Circuit Diagram of the Relay Recorder for Use with a D. C. Source

TYPE A—FOR USE WITH BATTERIES

1. *Object of Development.*—The object of this investigation was to develop a relay which should operate by received radio signals.

2. *Requirements.* To be satisfactory as a relay recorder the device should have the following characteristics: (1) it must be of simple construction with few adjustments; (2) it must be easy to adjust and capable of being put into operation quickly; (3) it must be selective and as free from static and such disturbances as possible; (4) it must be capable of operating at a speed of at least 12 times per second; (5) it must respond to weak signals; (6) it must be of strong design, durable and capable of maintaining its adjustments; (7) it must be portable.

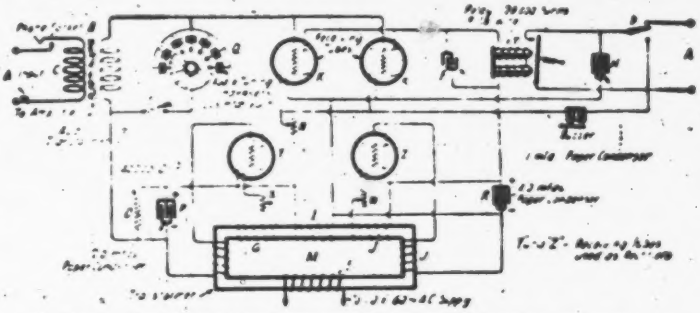

Fig. 8. Hook-up of Relay Recorder for Use On the 110-Volt A. C. Supply

3. *Circuit Used.* In order to avoid the use of a very sensitive relay designed to operate on currents of a milliampere or less, with delicate adjustments and light contacts and spring tension, advantage was taken of the radio-audio amplifier (which has now become a reliable radio instrument) to increase the input voltage to the relay circuit, thus making possible the use of a simple ordinary, high-resistance telegraph relay. The relay device has therefore been developed to operate from the output circuit of any suitable amplifier in place of the ordinary telephone receivers.

The only adjustment necessary is that of an ordinary telegraph relay.

Fig. 1 shows the wiring diagram. *A* is a telephone plug for connecting the relay device to the amplifier output. *B* is a phone socket, so that if desired the operator may listen to the received signal in the ordinary way. *C* is an audio transformer of the type used in audio amplifiers, the type used at present being a Signal Corps Type C-21. *E* is a two-megohm, grid leak. *Q* is a 0.0006-microfarad variable condenser or 0.0003-microfarad fixed condenser. *D* is a 60-volt variable "C" battery variable in steps of approximately three volts. *J* is a 160-volt dry "B" battery self-contained within the set. *K* is a type *UV*-201 Radiotron. *F* and *H* are each a one-microfarad paper condenser. *T* is an ordinary telegraph relay rewound with 12,000 turns of number 38 S. S. C. enamel wire. *A'* is the output to be connected to the apparatus to be controlled. *L* is a step-down transformer for operating the tube filaments from the 110-volt a-c. supply when such a supply is available.

4. *Principle of Operation.* The principle of operation is illustrated in Fig. 2. By means of the variable "C" battery *D*, the grid voltage is adjusted to approximately 30 volts at which value the plate current is zero, as shown at *A*. The incoming audio-frequency 0 to 10 milliamperes, while the increase from −30 to −40 volts is not effective in causing a plate current to flow due to the fact that −30 volts is already sufficient to reduce the plate current to zero. The result will be a pulsating direct current of 10 milliamperes, maximum amplitude, in the plate circuit. This current, flowing through the plate circuit and condenser *F* causes an increase in the plate current at the keying frequency, which change, passing through the relay coil, will pull the relay armature over, making contact at *T*, which contact may control any mechanism desired. With the "C" battery grid voltage adjusted for maximum sensitivity it was found that static induction, etc., operated the relay. When these disturbances are not as strong as the signal their effect on the relay may be overcome as shown in Fig. 3. For example, the "C" battery is shown increased to −35 volts, the critical value for maximum sensitivity being −30 volts. The disturbances due to stray currents, etc., merely reduce the "C" battery voltage to −30, which is not sufficient to cause plate current to flow. However, the signal, being of greater intensity than the stray currents, reduces the voltage to −25, which causes a plate current of five milliamperes. It will be seen therefore that all disturbing effects, if of less intensity than the signal, do not affect the relay.

5. *Method of Increasing Sensitivity and Selectivity.* During the development of this relay it was found that the rectified audio-

(Continued on page 98)

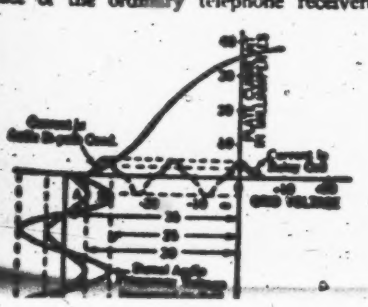

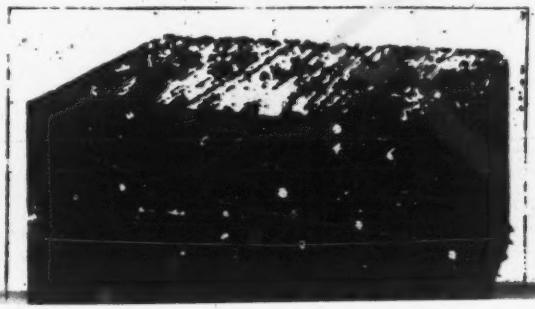

A Relay Recorder for Remote Control by Radio

By F. W. DUNMORE*

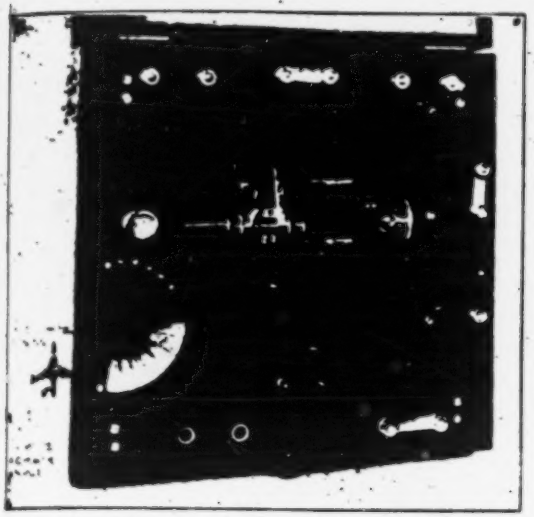

Fig. 6. Type B Relay Recorder for Use on the 110-Volt A. C. Supply

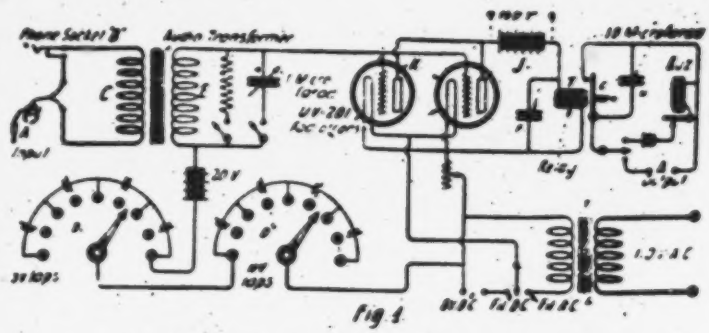

Fig. 1. Circuit Diagram of the Relay Recorder for Use with a D. C. Source

TYPE A—FOR USE WITH BATTERIES

1. *Object of Development.*—The object of this investigation was to develop a relay which should operate on received radio signals.

2. *Requirements.* To be satisfactory as a relay recorder the device should have the following characteristics: (1) it must be of simple construction with few adjustments; (2) it must be easy to adjust and capable of being put into operation quickly; (3) it must be selective and as free from static and such disturbances as possible; (4) it must be capable of operating at a speed of at least 12 times per second; (5) it must respond to weak signals; (6) it must be of strong design, durable and capable of maintaining its adjustments; (7) it must be portable.

3. *Circuit Used.* In order to avoid the use of a very sensitive relay designed to operate on currents of a milliampere or less, with delicate adjustments and light contacts and spring tension, advantage was taken of the radio-audio amplifier (which has now become a reliable radio instrument) to increase the input voltage to the relay circuit, thus making possible the use of a simple ordinary high-resistance telegraph relay. The relay device has therefore been developed to operate from the output circuit of any suitable amplifier in place of the ordinary telephone receivers.

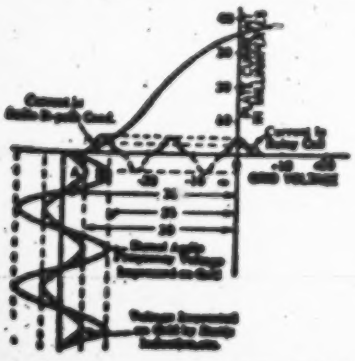

Fig. 2. Method of Eliminating Static and Inductive Effects, Which are Not Stronger Than the Signal

*Radio Laboratory, Bureau of Standards

The only adjustment necessary is that of an ordinary telegraph relay.

Fig. 1 shows the wiring diagram. *A* is a telephone plug for connecting the relay device to the amplifier output. *B* is a phone socket, so that if desired the operator may listen to the received signal in the ordinary way. *C* is an audio transformer of the type used in audio amplifiers, the type used at present being a Signal Corps Type C-21. *E* is a two-

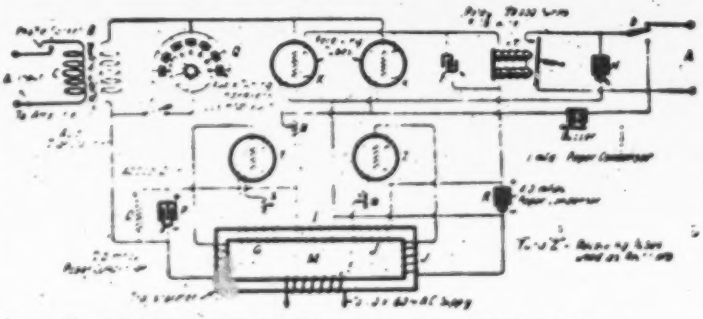

Fig. 8. Hook-up of Relay Recorder for Use On the 110-Volt A. C. Supply

megohm, grid leak. *Q* is a 0.0006-microfarad variable condenser or 0.0003-microfarad fixed condenser. *D* is a 60-volt variable "C" battery variable in steps of approximately three volts. *J* is a 160-volt dry "B" battery self-contained within the set. *K* is a type *UV*-201 Radiotron. *F* and *H* are each a one-microfarad paper condenser. *T* is an ordinary telegraph relay rewound with 12,000 turns of number 38 S. S. C. enamel wire. *A'* is the output to be connected to the apparatus to be controlled. *L* is a step-down transformer for operating the tube filaments from the 110-volt a.c. supply when such a supply is available.

4. *Principle of Operation.* The principle of operation is illustrated in Fig. 2. By means of the variable "C" battery *D*, the grid voltage is adjusted to approximately 30 volts at which value the plate current is zero, as shown at *A*. The incoming audio-frequency voltage impressed on the grid varies the grid potential, for example, from −30 to −20 volts. The 10 volts decrease from −30 to −20 causes an increase, for example, from 0 to 10 milliamperes, while the increase from −30 to −40 volts is not effective in causing a plate current to flow due to the fact that −30 volts is already sufficient to reduce the plate current to zero. The result will be a pulsating direct current of 10 milliamperes, maximum amplitude, in the plate circuit. This current, flowing through the plate circuit and condenser *F* causes an increase in the plate current at the keying frequency, which change, passing through the relay coil, will pull the relay armature over, making contact at *T*, which contact may control any mechanism desired. With the "C" battery grid voltage adjusted for maximum sensitivity it was found that static induction, etc., operated the relay. When these disturbances are not as strong as the signal their effect on the relay may be overcome as shown in Fig. 3. For example, the "C" battery is shown increased to −35 volts, the critical value for maximum sensitivity being −30 volts. The disturbances due to stray currents, etc., merely reduce the "C" battery voltage to −30, which is not sufficient to cause plate current to flow. However, the signal, being of greater intensity than the stray currents, reduces the voltage to −25, which causes a plate current of five milliamperes. It will be seen therefore that all disturbing effects, if of less intensity than the signal, do not affect the relay.

5. *Method of Increasing Sensitivity and Selectivity.* During the development of this relay it was found that the rectified audio-

(Continued on page 98)

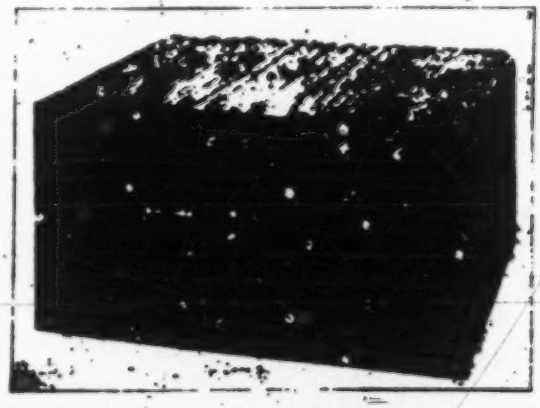

Fig. 4. Type A Relay Recorder for Use with Batteries

PLAINTIFFS' EXHIBIT NO. 53, SHEET 6, (Radio News, July 1922, Page 98)

Radisco Unbreakable Ivory Ear-Caps

(For Murdock Phones)

Sanitary, beautiful in appearance, light in weight, cool in summer. Dirt can be wiped off with a damp cloth. If the young men in the house do not appreciate the artistic appearance of these ivory ear-caps, they—at least—should be used for the benefit of the ladies.

Price, 75c Each

TWO-SLIDE TUNER

The Radisco H & M Two-Slide Tuner will tune up to practically all the broadcasting wave-lengths. Moulded ends and first-class construction throughout.

Price $4.00. With Puratone Detector Stand ($2.75), $6.75

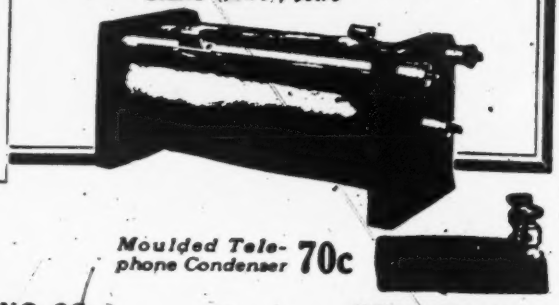

Moulded Telephone Condenser **70c**

RADIO DISTRIBUTING CO. NEWARK, N. J.

RADISCO

Standard Radio Horn

Pat. Applied For

7" Bell, 19" High
No. 17
Price $7.50

5" Bell, 14" High
No. 15
Price $5.00

Special Design

Will fit any receiver.
Heavy material, no blast.
Rubberoid Enamel finish.

Your Dealer can supply you

We figure on *Special* Horns for *Manufacturers.*

Standard Metal Mfg. Co.

Oldest and largest manufacturers of Horns in U. S.

237 Chestnut Street Newark, N. J., U. S. A.

IF YOU CAN'T READ

Dots and dashes you are missing the most important and interesting part of radio

came more clearly than the average male voice. Records of soprano singers were unusually clear and distinct.

The value of the entire outfit is estimated at $700.

Portraits Radiated Through the Ether

(*Continued from page 23*)

board, will record a minute square of corresponding shade, thus reconstituting, element by element, the original picture.

About one thousand words are required for a portrait; a special code, however, enables this to be reduced to three hundred words. From a wireless station, a given photograph can simultaneously be sent to any number of other radio stations (also to ships on the high sea), if these, in addition to an ordinary radio receiver set, comprise a typewriter such as above described.

This method will find useful applications in the illustrated press, in banking and other lines of commercial activity, for the broadcasting of meteorological bulletins, for advertising and, alas, for military purposes as well. One of the most important uses, however, will be for the purposes of the criminal police, portraits of criminals being, in a minimum of time, circulated broadcast in all directions and to any distance, and being even received on board ship.

A Relay Recorder for Remote Control by Radio

(*Continued from page 51*)

frequency current in the plate circuit caused the relay armature to chatter rapidly and make a poor contact with the fixed contact point through which the circuit is closed. This was overcome completely, however, by the addition of a one-microfarad condenser across the relay coils. This served the purpose of an audio-frequency by-pass for the highly inductive winding of the relay, thus greatly decreasing the resistance of the circuit. The change of plate current due to this audio-frequency caused a second change which occurred at the keying frequency. This latter change passes readily through the relay coils and exerts a strong steady pull on the relay armature without chattering.

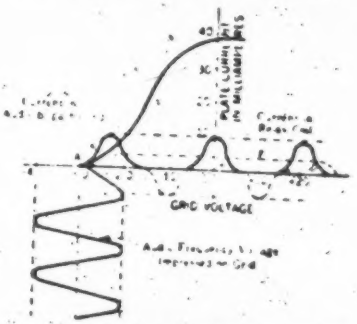

Fig. 2—Tube Characteristic Showing Principle of Operation of Relay Recorder.

It was also found that the 0.0006-microfarad variable condenser, Fig. 4, across the secondary of the input audio transformer made possible audio tuning, which increased the selectivity considerably. This tuning was very sharp and it was found that European stations could be made to operate the relay while a high-power station here in the United States would fail to operate it, although the high-power station was [illegible]

Radisco Unbreakable Ivory Ear-Caps

(For Murdock Phones)

Sanitary, beautiful in appearance, light in weight, cool in summer. Dirt can be wiped off with a damp cloth. If the young men in the house do not appreciate the artistic appearance of these ivory ear-caps, they—at least—should be used for the benefit of the ladies.

Price, 75c Each

TWO-SLIDE TUNER

The Radisco H & M Two-Slide Tuner will tune up to practically all the broadcasting wave-lengths. Moulded ends and first-class construction throughout.

Price $4.00. With Puratone Detector Stand ($2.75), $6.75

Moulded Telephone Condenser **70c**

RADIO DISTRIBUTING CO. NEWARK, N. J.

RADISCO

Standard Radio Horn

Pat. Applied For

Special Design

Will fit any receiver.
Heavy material, no blast.
Rubberoid Enamel finish.

Your Dealer can supply you

We figure on *Special* Horns for *Manufacturers.*

7" Bell, 19" High
No. 17
Price $7.50

5" Bell, 14" High
No. 15
Price $5.00

Standard Metal Mfg. Co.

Oldest and largest manufacturers of Horns in U. S.

237 Chestnut Street Newark, N. J., U. S. A.

IF YOU CAN'T READ

Dots and dashes you are missing the most important and interesting part of radio receiving. Continental Cod. Chart as used by author in teaching, is the surest, quickest and most reliable way of learning. $1.00, no stamps.

E. A. NIELSEN Box 67, Waverley, 79, Mass.

voice. Records of soprano singers were unusually clear and distinct.

The value of the entire outfit is estimated at $700.

Portraits Radiated Through the Ether

(Continued from page 23)

board, will record a minute square of corresponding shade, thus reconstituting, element by element, the original picture.

About one thousand words are required for a portrait; a special code, however, enables this to be reduced to three hundred words. From a wireless station, a given photograph can simultaneously be sent to any number of other radio stations (also to ships on the high sea), if these, in addition to an ordinary radio receiver-set, comprise a typewriter such as above described.

This method will find useful applications in the illustrated press, in banking and other lines of commercial activity, for the broadcasting of meteorological bulletins, for advertising and, alas, for military purposes as well. One of the most important uses, however, will be for the purposes of the criminal police, portraits of criminals being, in a minimum of time, circulated broadcast in all directions and to any distance, and being even received on board ship.

A Relay Recorder for Remote Control by Radio

Continued from page 51)

frequency current in the plate circuit caused the relay armature to chatter rapidly and make a poor contact with the fixed contact point through which the circuit is closed. This was overcome completely, however, by the addition of a one-microfarad condenser across the relay coils. This served the purpose of an audio-frequency by-pass for the highly inductive winding of the relay, thus greatly decreasing the resistance of the circuit. The change of plate current due to this audio-frequency caused a second change which occurred at the keying frequency. This latter change passes readily through the relay coils and exerts a strong steady pull on the relay armature without chattering.

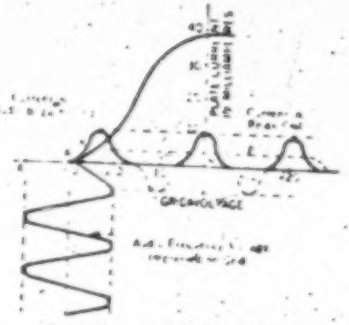

Fig. 3—Tube Characteristic Showing Principle of Operation of Relay Recorder.

It was also found that the 0.0006-microfarad variable condenser, Fig. 1, across the secondary of the input audio transformer made possible audio tuning, which increased the selectivity considerably. This tuning was very sharp and it was found that European stations could be made to operate the relay while a high-power station here in the United States would fail to operate it, although the high-power station was coming in on the same wave-length and slightly stronger. This was made possible by adjusting the heterodyne note of the European station to a frequency different from that of the local station and then tuning the secondary of the audio trans-

EVERYTHING Radio!

Our experience as representatives of all the popular makes of radio apparatus enables us to render the best service.

We are authorized Radio Corporation jobbers, including the famous Westinghouse Receivers and new General Electric Receivers.

Trade Mark Registered

PHILADELPHIA WIRELESS SALES CORPORATION

1533 Pine Street Philadelphia, Pa.

Be Sure You Get the Best — Ask for the New

DICTOGRAPH HEADSET

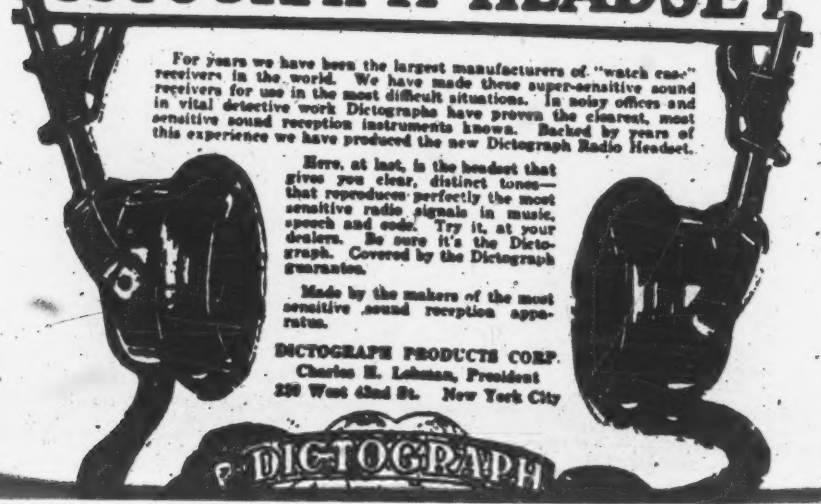

For years we have been the largest manufacturers of "watch case" receivers in the world. We have made these super-sensitive sound receivers for use in the most difficult situations. In noisy offices and in vital detective work Dictographs have proven the clearest, most sensitive sound reception instruments known. Backed by years of this experience we have produced the new Dictograph Radio Headset.

Here, at last, is the headset that gives you clear, distinct tones—that reproduces perfectly the most sensitive radio signals in music, speech and code. Try it, at your dealers. Be sure it's the Dictograph. Covered by the Dictograph guarantee.

Made by the makers of the most sensitive sound reception apparatus.

DICTOGRAPH PRODUCTS CORP.
Charles E. Lehman, President
220 West 42nd St. New York City

former to that frequency. The 0.0006-microfarad variable condenser may be replaced by a 0.0003-microfarad fixed condenser and the audio tuning accomplished by adjusting the heterodyne note to the resonant frequency. By means of this audio tuning one of three stations transmitting simultaneously has been selected and caused to operate the relay, although all were of equal intensity.

By the use of two relay recorders connected in series across the output terminals of a single radio receiving set, two messages sent on practically the same wave-length, but of different audio frequencies, have been accurately received simultaneously.

6. *Speed of Operation.* Tests showed that with a signal strength sufficient to produce a plate current of 10 milliamperes the relay could be operated at a speed of 48 contacts per second, the contact being sufficient to operate a buzzer. With three milliamperes in the plate circuit a speed of 27 contacts per second was obtained. With one milliampere a speed of 19 per second. In each case the relay armature spring tension was adjusted for the best operation.

7. *Sensitivity.* As stated above, this relay was designed primarily with the intention of obtaining a device which should be durable, simple in operation, and strong in construction. Sensitivity is obtained by means of radio-audio amplification thereby increasing the voltage input to the relay circuit and eliminating the necessity of extreme sensitivity in the relay. Tests at 600 cycles showed that the relay circuit was fairly sensitive, as approximately 1.3 volts at the input terminals of the audio transformer in the relay circuit caused a current of five milliamperes to flow through the relay coil in the plate circuit.

8. *Durability.* As the relay instrument used in this recorder is of the ordinary telegraph type its durability is well established. The only elements requiring occasional renewal are the two electron tubes, the 60-volt "C" battery, and the 160-volt "B" battery.

9. *Portability.* The complete recorder with the exception of the filament lighting battery is contained in a cabinet 7" by 13" by 11", as shown in Fig. 4.

10. *Uses.* 1. As an ordinary receiver it has advantages over reception with telephone receivers, for one may receive by buzzer or sounder with all induction and interfering noises eliminated (if not louder than the signal).

2. A tape or drum-type recorder may be used and a copy made without a trained radio operator.

3. Time signals may be recorded.

4. A call system may be worked by a time switch connected to close the filament circuit for a given time at set calling intervals.

5. Any form of mechanism may be operated by an incoming signal.

6. A receiving station may be located remotely from the transmitting station and the radio signals relayed by wire to the operating room some miles distant.

In conclusion it may be stated that a relay of this type should operate satisfactorily, *without attention*, on an airplane where mechanical vibration may be excessive as the pull on the armature with three milliamperes, or over, in the relay coil makes possible the use of a spring tension on the relay armature sufficient to keep it from moving due to mechanical vibration of the relay.

It would seem that the above-mentioned feature makes this remote control relay more serviceable than those now on the market which require delicate adjustment of spring tension, contact points, and suspended vibrating elements.

TYPE B—FOR USE ON THE 60-CYCLE 110-

EVERYTHING Radio

Our experience as representatives of all the popular makes of radio apparatus enables us to render the best service.

We are authorized Radio Corporation jobbers, including the famous Westinghouse Receivers and new General Electric Receivers.

Trade Mark Registered

PHILADELPHIA WIRELESS SALES CORPORATION

1533 Pine Street Philadelphia, Pa.

Be Sure You Get the Best — Ask for the New

DICTOGRAPH HEADSET

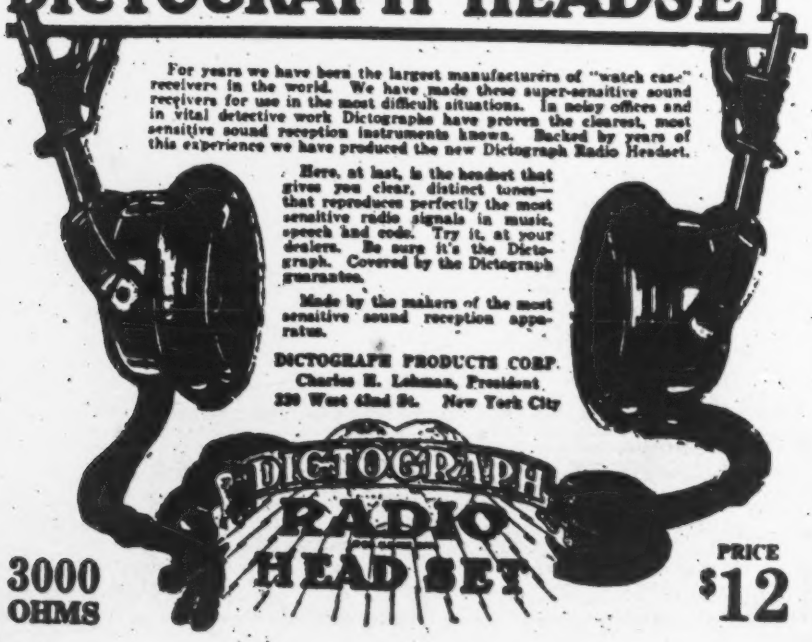

former to that frequency. The 0.0006-microfarad variable condenser may be replaced by a 0.0003-microfarad fixed condenser and the audio tuning accomplished by adjusting the heterodyne note to the resonant frequency. By means of this audio tuning one of three stations transmitting simultaneously has been selected and caused to operate the relay, although all were of equal intensity.

By the use of two relay recorders connected in series across the output terminals of a single radio receiving set, two messages sent on practically the same wave-length, but of different audio frequencies, have been accurately received simultaneously.

6. *Speed of Operation.* Tests showed that with a signal strength sufficient to produce a plate current of 10 milliamperes the relay could be operated at a speed of 48 contacts per second, the contact being sufficient to operate a buzzer. With three milliamperes in the plate circuit a speed of 27 contacts per second was obtained. With one milliampere a speed of 19 per second. In each case the relay armature spring tension was adjusted for the best operation.

7. *Sensitivity.* As stated above, this relay was designed primarily with the intention of obtaining a device which should be durable, simple in operation, and strong in construction. Sensitivity is obtained by means of radio-audio amplification thereby increasing the voltage input to the relay circuit and eliminating the necessity of extreme sensitivity in the relay. Tests at 600 cycles showed that the relay circuit was fairly sensitive, as approximately 1.3 volts at the input terminals of the audio transformer in the relay circuit caused a current of five milliamperes to flow through the relay coil in the plate circuit.

8. *Durability.* As the relay instrument used in this recorder is of the ordinary telegraph type its durability is well established. The only elements requiring occasional renewal are the two electron tubes, the 60-volt "C" battery, and the 160-volt "B" battery.

9. *Portability.* The complete recorder with the exception of the filament lighting battery is contained in a cabinet 7" by 13" by 11", as shown in Fig. 4.

10. *Uses.* 1. As an ordinary receiver it has advantages over reception with telephone receivers, for one may receive by buzzer or sounder with all induction and interfering noises eliminated (if not louder than the signal).

2. A tape or drum-type recorder may be used and a copy made without a trained radio operator.

3. Time signals may be recorded.

4. A call system may be worked by a time switch connected to close the filament circuit for a given time at set calling intervals.

5. Any form of mechanism may be operated by an incoming signal.

6. A receiving station may be located remotely from the transmitting station and the radio signals relayed by wire to the operating room some miles distant.

In conclusion it may be stated that a relay of this type should operate satisfactorily, *without attention*, on an airplane where mechanical vibration may be excessive as the pull on the armature with three milliamperes, or over, in the relay coil makes possible the use of a spring tension on the relay armature sufficient to keep it from moving due to mechanical vibration of the relay.

It would seem that the above-mentioned feature makes this remote control relay more serviceable than those now on the market which require delicate adjustment of spring tension, contact points, and suspended vibrating elements.

Type B—For Use on the 60-Cycle, 110-Volt, A-C. Supply

This recorder is similar in construction and operation to the Type *A* recorder, except that the plate and grid voltages (B and C battery) are supplied from the 60-cycle, 110-volt a-c. supply. The current for operating the tube filaments is also obtained from this source,

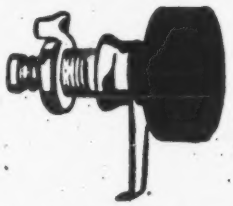

I-C

THE MARK OF QUALITY

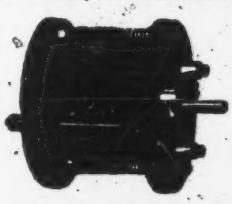

I. C. ROTARY LEVER SWITCH

Exceptionally well designed and constructed; substantial throughout. Switch is secured to panel by means of holding nut at back. Large flange presents ample surface against panel. Terminal is held securely under bearing. Cannot turn when switch lever is operated. Bearing is threaded on outside and extends through panel. Switch designed to clear spring and spring lock. Not necessary to disassemble switch when mounted.

Adjustable spring at end of shaft insures uniform tension at all times. Operating knob is 1⅛ inches in diameter. Nickel plated; beautifully finished. Packed in individual boxes. Drilling template for contacts of 1 inch, also 1½ inch radius accompanies each switch.

Price, R-10 Radius 1".....$0.75
Price, R-12 Radius 1½".... .75

Announcement

Owing to the fact that the Industrial Controller Co. has had an unusually wide experience in the manufacture of apparatus for radio equipment; also the fact that their manufacturing facilities are particularly suited to specializing on certain parts of radio equipment, this company is placing on the market a quality line of condensers, switch parts, and other apparatus as used in amateurs' small receiving sets.

These devices are featured by the same quality and high-grade workmanship which has always characterized I. C. products; yet they are offered at a fair price.

For a number of years, the U. S. Government, also many of the large radio companies, have used, in connection with radio equipment, apparatus built by the Industrial Controller Company.

In purchasing I. C. equipment, you are assured substantial construction, practical design and satisfactory results.

I. C. VARIABLE CONDENSER

Substantial construction in every detail. Movable plates carried on a large hexagon shaft; separated by accurately machined spacers. Holes in plate are hexagon, and fit closely to the shaft, insuring correct alignment of the plates.

Bearings are large. An adjustable thrust bearing is provided. Sliding contact is provided for movable plates. Current is not carried through the bearings.

Tension spring is easily adjustable so that tension may be changed to suit the operator.

The condenser is arranged for panel mounting, although with a very slight change it may be used for table mounting.

All parts are nickel plated.

The condenser is made in the following sizes:

R-50—11 plates, capacity .00025 MFD..... $4.25
R-55—23 plates, capacity .0005 MFD..... 4.50
R-60—43 plates, capacity .001 MFD..... 4.75

See Your Dealer

Industrial Controller Co. MILWAUKEE WISCONSIN

so that the recorder is operated entirely independent of any form of batteries. It is only necessary, therefore, to connect to the 110-volt a-c. line and the recorder is ready to operate.

The method of operating the recorder from the a-c. supply consists in the use of the two receiving tubes as rectifiers as shown in Fig. 5. The tubes *Y* and *Z* are used as half wave rectifiers, one supplying the plate voltage, and the other the grid voltage. When used as rectifiers, receiving tubes should have the grids and plates electrically connected together. A special transformer *M* with six windings is used. Two of the windings *G* and *J* supply the filaments of the two rectifier tubes. A third, *I*, the filaments of the recorder tubes. A fourth, *U*, the high voltage for the plate. The fifth, *L*, supplies the grid voltage, and he sixth, *E*, is the 110-volt primary winding. The rectified alternating current is smoothed out by means of four microfarad condensers *P* and *R*, connected across the output terminals. As the currents in the grid and plate circuits are small, smoothing out inductance was found unnecessary. It was found necessary to put 40,000 ohms as shown at *O*, across the output circuit of the rectifier tube supplying the voltage to the grid, as the grid is otherwise insulated from the filament of tubes *K* by the rectifier tube. By means of the filament rheostats, *X* and *W*, the grid and plate voltages may be varied over any ranges desirable for the most efficient operation of the recorder. By the use of binding posts with straps as shown in Fig. 6, the type *B* recorder may be operated from *A*, *B* and *C* batteries for supplying the filament, plate and grid voltages respectively in cases where the a-c. supply is not available.

In cases where very high-speed operation is desired, the ordinary relay may be replaced by one designed for high-speed operation.

Abstracted from the Journal of Institute of Electrical Engineers, April, 1922.

Universal Amplifier Invented

(Continued from page 32)

The experimental unit has demonstrated its efficacy in the reception of communications from spark stations, of medium power consumption, as far distant as Boston. And, strange to say, a coil only five inches in diameter was effectively employed as the receiving antenna. This small coil is seen on the table along with the amplifier in the photograph reproduced herewith. The signals when thus transmitted from Boston to Washington were audible several feet from the head telephones. The model, which will serve as a copy for quantity production, is on exhibition in room number 407 of the East Building of the Bureau of Standards, where the naval radio research laboratory was recently provided equipment and space for studying vacuum tubes.

"While the amplifying qualities of the three-electrode vacuum tube have long been known and used," to quote an official statement of the United States Navy Department, "yet heretofore the amplifiers obtainable would amplify only incoming signals over a narrow band of wave-lengths. It is desirable, however, to have apparatus which will receive over a very wide range of wave-lengths, and the amplification should be as strong in one region of wave-length as in another, if it is to be universal." The amplifier designed by Dr. J. M. [illegible]

Warns of Fire Danger

KEYSTONE RADIO ARRESTERS

Approved by Underwriters

To protect your radio apparatus and your property against lightning and to take off static accumulations. Can be installed outdoors where a lightning arrester belongs, highly efficient, no vacuum to lose, no fuse to blow, offers permanent protection. Takes the place of a lightning switch.

For sale by Radio Dealers, Department Stores and Electrical Dealers everywhere.

Electric Service Supplies Co.
Mfrs. of Lightning Arresters for 30 Years
17th & Cambria Sts., Phila.

Type A, Keystone Arrester, with wire leads. Price $2.00

Type B, Keystone Arrester, with binding posts. Price $2.00

LATEST RADIO SENSATION

[illegible] Radio set on the market. A question to Radio. The neatest, most compact and efficient. Both

I-C

THE MARK OF QUALITY

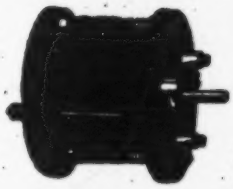

I. C. ROTARY LEVER SWITCH

Exceptionally well designed and constructed; substantial throughout. Switch is secured to panel by means of holding nut at back. Large flange prevents ample surface against panel. Terminal is held securely under bearing. Cannot turn when switch lever is operated. Bearing is threaded on outside and extends through panel. Switch designed to clear spring and spring lock. Not necessary to disassemble switch when mounted.

Adjustable spring at end of shaft insures uniform tension at all times. Operating knob is 1½ inches in diameter. Nickel plated; beautifully finished. Packed in individual boxes. Drilling template for contacts of 1 inch, also 1½ inch radius accompanies each switch.

Price, R-10 Radius 1"..... $0.75
Price, R-12 Radius 1½"..... .75

Announcement

Owing to the fact that the Industrial Controller Co. has had an unusually wide experience in the manufacture of apparatus for radio equipment; also the fact that their manufacturing facilities are particularly suited to specializing on certain parts of radio equipment, this company is placing on the market a quality line of condensers, switch parts, and other apparatus as used in amateurs' small receiving sets.

These devices are featured by the same quality and high-grade workmanship which has always characterized I. C. products; yet they are offered at a fair price.

For a number of years, the U. S. Government, also many of the large radio companies, have used, in connection with radio equipment, apparatus built by the Industrial Controller Company.

In purchasing I. C. equipment, you are assured substantial construction, practical design and satisfactory results.

I. C. VARIABLE CONDENSER

Substantial construction in every detail. Movable plates carried on a large hexagon shaft; separated by accurately machined spacers. Holes in plate are hexagon, and fit closely to the shaft, insuring correct alignment of the plates.

Bearings are large. An adjustable thrust bearing is provided. Sliding contact is provided for movable plates. Current is not carried through the bearings.

Tension spring is easily adjustable so that tension may be changed to suit the operator.

The condenser is arranged for panel mounting, although with a very slight change it may be used for table mounting.

All parts are nickel plated.

The condenser is made in the following sizes:

R-50—11 plates, capacity .00025 MFD..... $4.25
R-35—23 plates, capacity .0005 MFD..... 4.50
R-40—43 plates, capacity .001 MFD..... 4.75

See Your Dealer

Industrial Controller Co. MILWAUKEE WISCONSIN

KEYSTONE RADIO ARRESTERS

Approved by Underwriters

To protect your radio apparatus and your property against lightning and to take off static accumulations. Can be installed outdoors where a lightning arrester belongs, highly efficient, no vacuum to lose, no fuse to blow, offers permanent protection. Takes the place of a lightning switch.

For sale by Radio Dealers, Department Stores and Electrical Dealers everywhere.

Electric Service Supplies Co.
Mfrs. of Lightning Arresters for 30 Years
17th & Cambria Sts., Phila.

Type A, Keystone Arrester, with wire leads. Price $3.00

Type B, Keystone Arrester, with binding posts. Price $3.00

LATEST RADIO SENSATION

The best crystal Radio set on the market. A sensation in Radio. The neatest, most compact and efficient. Built entirely different. Must be seen to be appreciated. Retail price, $25.00. Sample sent prepaid on receipt of $12.00. Wonderful proposition to jobbers and dealers.

RADIO DIALS

Three inch polished aluminum dials without knobs. 0 to 100 scale reading. Price, $12.50 per hundred.

CLINTON RADIOPHONE CO., Dept. A, 29 S. CLINTON ST., CHICAGO, ILL.

so that the recorder is operated entirely independent of any form of batteries. It is only necessary, therefore, to connect to the 110-volt a-c. line and the recorder is ready to operate.

The method of operating the recorder from the a-c. supply consists in the use of the two receiving tubes as rectifiers as shown in Fig. 5. The tubes *Y* and *Z* are used as half wave rectifiers, one supplying the plate voltage, and the other the grid voltage. When used as rectifiers, receiving tubes should have the grids and plates electrically connected together. A special transformer *M* with six windings is used. Two of the windings *G* and *J* supply the filaments of the two rectifier tubes. A third, *I*, the filaments of the recorder tubes. A fourth, *U*, the high voltage for the plate. The fifth, *L*, supplies the grid voltage, and he sixth, *E*, is the 110-volt primary winding. The rectified alternating current is smoothed out by means of four microfarad condensers *P* and *R*, connected across the output terminals. As the currents in the grid and plate circuits are small, smoothing out inductance was found unnecessary. It was found necessary to put 40,000 ohms as shown at *O*, across the output circuit of the rectifier tube supplying the voltage to the grid, as the grid is otherwise insulated from the filament of tubes *K* by the rectifier tube. By means of the filament rheostats, *X* and *W*, the grid and plate voltages may be varied over any ranges desirable for the most efficient operation of the recorder. By the use of binding posts with straps as shown in Fig. 6, the type *B* recorder may be operated from *A*, *B* and *C* batteries for supplying the filament, plate and grid voltages respectively in cases where the a-c. supply is not available.

In cases where very high-speed operation is desired, the ordinary relay may be replaced by one designed for high-speed operation.

Abstracted from the Journal of Institute of Electrical Engineers, April, 1922.

Universal Amplifier Invented

(*Continued from page 32*)

The experimental unit has demonstrated its efficacy in the reception of communications from spark stations, of medium power consumption, as far distant as Boston. And, strange to say, a coil only five inches in diameter was effectively employed as the receiving antenna. This small coil is seen on the table along with the amplifier in the photograph reproduced herewith. The signals when thus transmitted from Boston to Washington were audible several feet from the head telephones. The model, which will serve as a copy for quantity production, is on exhibition in room number 407 of the East Building of the Bureau of Standards, where the naval radio research laboratory was recently provided equipment and space for studying vacuum tubes.

"While the amplifying qualities of the three-electrode vacuum tube have long been known and used," to quote an official statement of the United States Navy Department, "yet heretofore the amplifiers obtainable would amplify only incoming signals over a narrow band of wave-lengths. It is desirable, however, to have apparatus which will receive over a very wide range of wave-lengths, and the amplification should be as strong in one region of wave-length as in another, if it is to be universal." The amplifier designed by Dr. J. M. Miller, according to claims, successfully answers this criticism lodged against former designs of amplifiers. The details of this mechanism, other than those disclosed in this article, are not forthcoming until the patent that is pending has been granted, or otherwise disposed of.

PLAINTIFFS' EXHIBIT No. 59, Sheet 1.
(Radio, Nov. 1922, Page 838)

Radio Messages Typed Automatically From Airplane to Ground

By S. R. WINTERS

Plaintiffs Ex 59

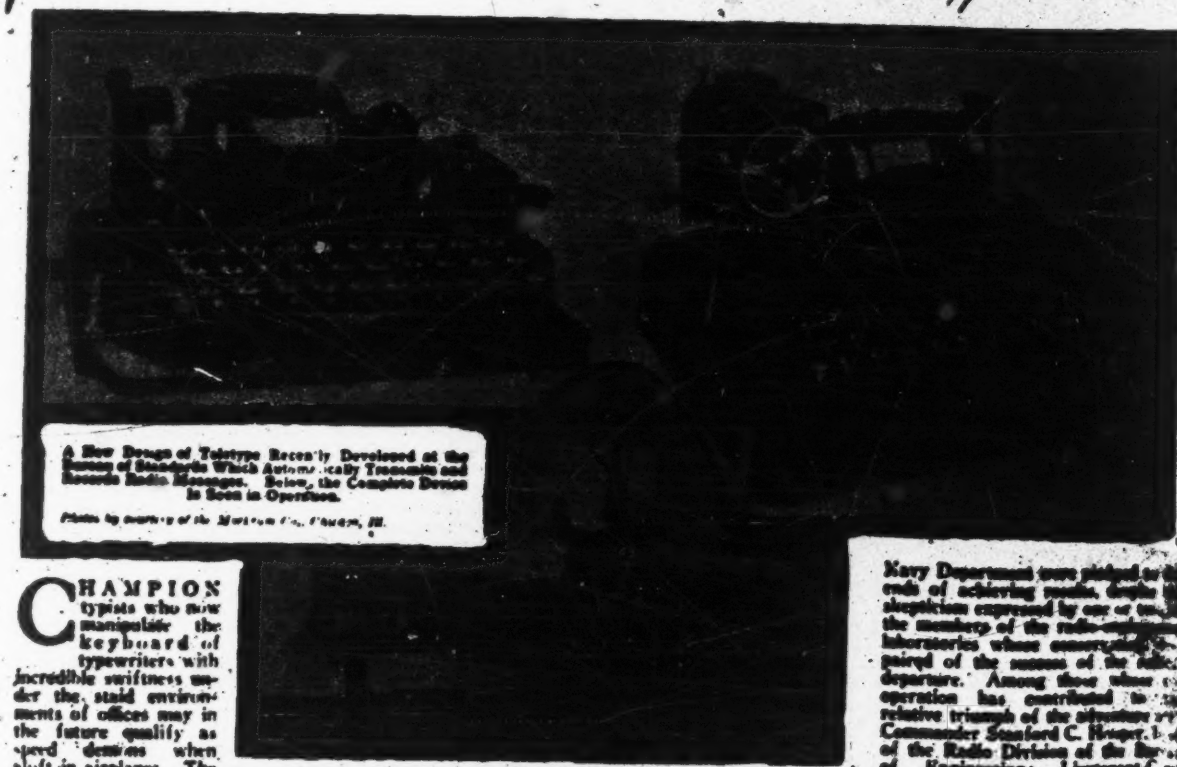

A New Design of Teletype Recently Developed at the Bureau of Standards Which Automatically Transmits and Records Radio Messages. Below, the Complete Device Is Seen in Operation.

Photos by courtesy of the Morkrum Co., Chicago, Ill.

CHAMPION typists who now manipulate the keyboard of typewriters with incredible swiftness under the staid environments of offices may in the future qualify as speed demons when aloft in airplanes. The click of the typewriter keys may vie for supremacy with the din of noise of the magnetos of the aircraft engine. Moreover, the rapid depression of the keys of this form of printing machine may be faithfully recorded by means of radio telegraph on a printing unit in a wireless receiving station planted on the ground. Withal, this strange adventure marks the application of the mechanism now employed in the automatic transmission and reception of telegrams by the line-wire system of communication to the sending of messages by the medium of electro-magnetic waves through space.

This radical departure, evidencing the constant and surprising developments in the application of radio-communication, is made possible by the adaptation of a modified form of the "Teletype," an instrument highly developed for telegraph stations in the transmission and reception of telegrams automatically. The electric impulse, however, in this instance, travels along a wire, and as the name might imply, the operator "tells it to the type" instead of some other vehicle of conveyance. It is almost human in its behavior, which habitual demonstration in land-line telegraphy probably occasioned the inquisitive scientific mind of John B. Brady, of Washington, D. C., to ponder its application to communicative purposes in the absence of wires—"space radio," to be explicit. Its service on board aircraft was only one of the several uses suggested, this application being given priority and prominence of mention in this article by reason of its spectacular tendency. The interchange of messages between two points on land, intercommunication between sea-faring vessels and between ships and shore, are among the potential services indicated when the "Teletype" and Hertzian waves form a unity of purpose.

The counsel and practical assistance of a formidable array of radio-engineering and mechanical talent was enlisted for the negotiation of the trail-blazing experiments, which have been conducted intermittently for a period extending over a year or more. The Morkrum Company of Chicago, inventors and manufacturers of the "Teletype," was committed to the plans of the innovation and contributed the services of J. O. Carr and Ronald S. Wishart in hopes of realizing the aims of the pretentious undertaking. The personnel and resources of the Bureau of Engineering of the United States Navy Department were pledged to the ends of achieving results, despite the skepticism expressed by one or two of the members of the radio-engineering laboratories whose conservatism [illegible] paired of the success of the radical departure. Among those whose co-operation has contributed to the relative triumph of the adventure are Commander Stanford C. Hooper, head of the Radio Division of the Bureau of Engineering; Lieutenant-Commander E. H. Loftin; John B. Brady, an officer of the Naval Reserve Force; Alfred Crossley, expert radio aide; Commander A. H. Taylor, in charge of the Naval Air Station at Anacostia; Dr. L. W. Austin, head of the Radio Research Laboratory of the Navy Department; Dr. John M. Miller; Lieutenant H. W. Kitchen; L. C. Young; C. B. Mirick; and Messrs. Meyers and Judson.

The initial experiments were negotiated between the Radio Research Laboratory of the Navy Department, located at the Bureau of Standards, and the Naval Aircraft Station at Anacostia—approximately eight miles intervening. The "Teletype" for these tests

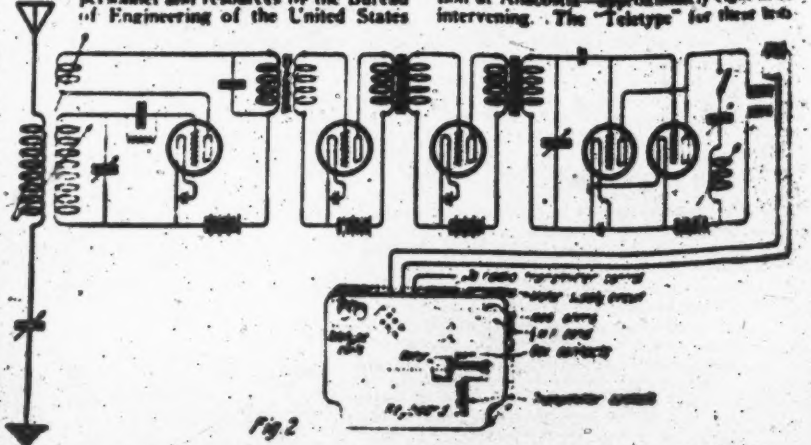

Fig. 2

The Radio Receiving System at the Bureau of Standards With the Connections for the Teletype to Permit Automatic Reception.

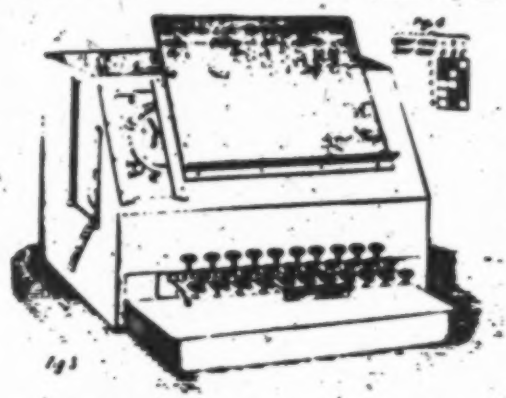

The keyboard of the Teletype operator bears levers which control the opening and closing of contacts. Each letter is represented by a certain number of closings and openings. On the right is the special relay used at the receiving stations.

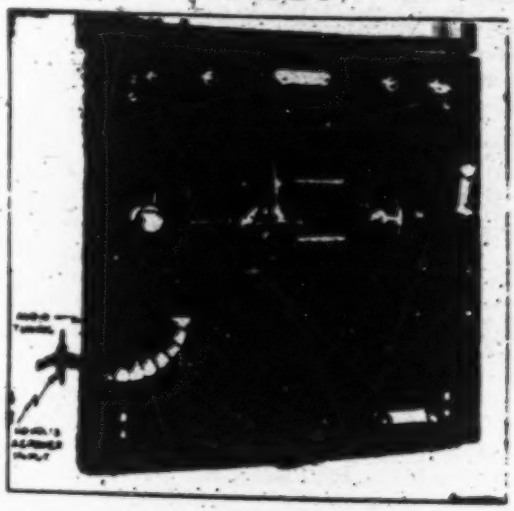

was loaned to the Government by J. O. Carr and Ronald S. Wishart, respectively manager and assistant manager of the Sales Engineering Department of the Morkrum Company. The ultimate objective was to transmit wireless signals by manipulation of a keyboard bearing striking similarity to that of a typewriter, through space, for a distance of several miles in such a trustworthy manner that they might be faithfully recorded automatically at the radio-receiving station. The first attempt at communication in this way resulted in the jotting down of an unintelligible jumble of representations, which resembled more closely Chinese signs than the English language. Success was not despaired of since patience never ceases to be a virtue with scientists in their explorations to unfold new truths and clothe old principles in fresh garb. A series of efforts to effect intelligible communication by the strange combination of the "Teletype" and the "ether waves" brought order out of a baffling confusion, to employ a figure of speech. A speed of 45 words a minute was attained, in the transmission and reception of communications, without errors. The specimen of message transmitted from the Bureau of Standards and received at the Naval Air Station at Anacostia, exhibited as Fig. 5 in the group of illustrations herewith reproduced, substantiates the claim advanced.

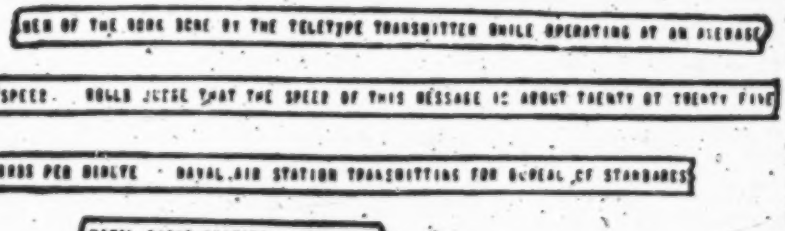

Example of the Reproduction of a Message Received Automatically on the Teletype.

The Morkrum Company loaned to the United States Navy Department a set of "Teletypes," an inventive product jointly realized by Charles L. and Howard L. Krum. Briefly, as applied to the communication system founded by Bandot, the "Teletype" is an automatic transmitting and receiving mechanism for dispatching messages over telegraph wires and setting down the signals at a distant receiving station. The apparatus comprises a base scarcely larger than that of a standard typewriter, and contains a keyboard closely resembling the office utility referred to. A set of transmitting contacts are mounted on a unit driven by an electric motor whose source of supply may be either 110 volts of direct or alternating current.

The design of "Teletype" employed on aircraft derived its electric power from a 6-volt storage battery, the unit of power commonly used in radio-telephone receiving outfits for lighting the filament of the electron tube, or "King Electron," as one radio engineer is wont to dignify the importance of this electric unit. The base of this automatic device likewise supports a discriminating or selective printing mechanism, operated by the same motor previously referred to and controlled by a pair of armature coils. The latter are actuated by incoming wireless signals as a means of setting in motion the selective mechanism by which the radio signals are recorded in printed form. One complete "Teletype" was assigned for service at the Radio Research Laboratory of the Navy Department, located at the Bureau of Standards, while another set was sent to the Naval Air Station at Anacostia.

The "Teletype" was connected to the radio-transmitting apparatus, as illustrated in Fig. 1. When the keys on the keyboard of the former instrument were depressed, the effect produced was that of modulating the electron tube of the wireless transmitter, causing the going forth of impulses of energy from the radio-communication system. The keyboard, shown in Fig. 3 of the group of diagrams, is provided with a standard set of key-levers pivotally mounted within the base of the "Teletype." A group of five horizontal selector bars is arranged within the latter automatic printing device, equipped with cam facets in such a fashion that the depression of a particular key results in the cam engagement with individual bars, pushing them laterally to control the position of locking latches. These, in turn, hook over a set of goose-neck levers, picturesquely described. The levers control the opening and closing of contacts, and are, in turn, manipulated by a group of differentially positioned cams, which are continuously rotated by the motor on the "Teletype." By pressing a particular key certain of the goose-neck levers release their contacts whereby the cams in their rotation cause the closing of the radio-transmitting circuit in a sequence of impulses.

The wireless transmitting circuit may be completed through the grid circuits of the electron-tubes, as described in Fig. 1. Oscillations may be started and stopped, as well as impulses of electric energy released from the antenna, in a sequence corresponding to the particular key depressed. Differing radically from other systems of communication is the innovation of employing an impulse code possessing five units to each character. This mode of transmission is obviously at variance with the dot and dash code, commonly employed by telegraphers. For instance, the letter "a," shown in Fig. 4, may be represented by two circuit closings and three spaces, governed by the releasing of the goose-neck levers on the "Teletype."

When flung into space, consigned to the increasing burdens of the electro-magnetic waves, these impulses of electric energy may be "picked up" at receiving points and automatically printed by a receiving "Teletype." A peculiar virtue by reason of the novel combination of the latter instrument with that of the "wonderful wireless waves" is the possibility of the secrecy enveloping the transmission and reception of radio communications. This desirable feature may be accomplished by providing the communicative system with several different types of wheels for use on the printer, and at the same time making provision for a supply of removable rubber caps on the keyboard to correspond with the types of wheels employed.

The radio receiving station, in operation at the Bureau of Standards, is represented in Fig. 2 of the series of schematic diagrams. Continuous-wave transmission as-

(Continued on page 1001)

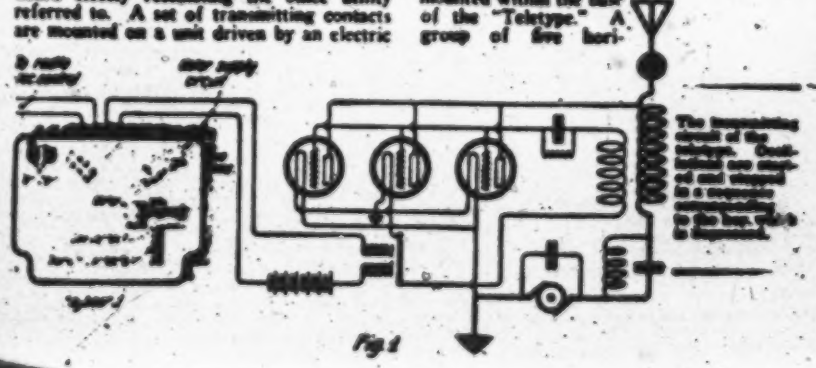

The transmitting circuit of the teletype. Oscillations are started and stopped in a sequence corresponding to the key which is depressed.

Fig. 2

6
3
3

present status of radio. No photograph, only a mere sketch, is given, and no patent numbers are given.

This aspect of the boom is the most unfortunate one, but as the public becomes more and more educated to radio the effect of the charlatan will be less felt. It is entirely up to the radio periodicals to disseminate this radio education and to assist the general public in discriminating between the good and the bad. Time will, of course, eventually result in a weeding out of the fraudulent, the incompetent, and those who, . . the Hairy Ape "do not belong."

Radio Messages Typed Automatically from Aeroplane to Ground

(*Continued from page 839*)

in force and a heterodyne receiver used. Two stages of amplification were employed in the oscillating electron tube. The output of the amplifier was connected to an automatic relay recorder, shown in Fig. 6, recently perfected by F. W. Dunmore of the Radio Communication Section of the Bureau of Standards, United States Department of Commerce. This design of radio-recorder is said to be especially selective to notes of certain frequencies. The accuracy of its tuning effect is vouchsafed in the ability to transmit three different messages on the same wave-length at varying frequencies, isolating one without interference from the others.

The Dunmore relay recorder was intimately identified with the "Teletype" coils, an armature being negotiated up and down by the latter in accordance with the receipt of incoming electric impulses. The receiving printer mechanism of the "Teletype" is controlled by this armature. A clutch-and-brake device governs the starting and stopping of the printer on the receipt of wireless signals. A central shaft through the printer operates the mechanism for determining and printing the particular characters represented by the radio signals. Or, differently expressed, upon acknowledgment of electric impulses of a certain sequence the type wheel is revolved around with dispatch to print the characters represented by those wireless signals. Shifting from an explanation of the transmitting end of this communicative system to that of the behavior observed in the reception of messages the following is noted: The depression of a key on the keyboard causes the radio-active energy from the antenna in a particular sequence which is received at the receiving point, to operate the "Teletype" printer, which automatically uses discrimination and selects the character represented by the key depressed at the transmitting station and simultaneously prints that character.

Commander A. H. Taylor, in active charge of the Naval Air Station at Anacostia, suggested the possibility of the adaptation of this form of communication to aircraft as a means of exchanging intelligence with shore stations, with other units of aircraft, or between airplanes and seafaring vessels. The keyboard designed by the Markum Company for service aloft, as shown in Fig. 7 may be manipulated in the absence of knowledge of the international code; in fact, a skilled typist can operate the keyboard in an airplane with quite the facility required in fingering the office typewriter. Compactness is a virtue of the keyboard for transportation on board aircraft, it fitting snugly into the space now required for carrying the Morse telegraph key and its flame proof casing. The trailing-wire antenna common to the maintenance of radio-communication at present between different air-going machines and between wireless stations on the ground meet the requirements involved in the use of the "airplane radio typewriter."

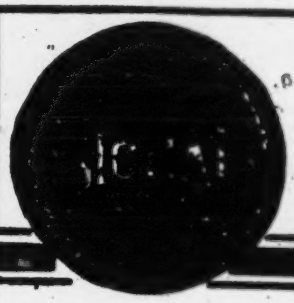

Avoid That Embarrassing Moment!

IT TAKES long experience in "wireless" to insure production of efficient and dependable Radio Equipment. SIGNAL stands for that knowledge. SIGNAL—parts or sets—are the product of a plant that has been manufacturing telephone and telegraph equipment for over 30 years—that developed as "wireless" developed—that knows Radio from the very beginning—and whose output of Radio Equipment is made by men who have been making *that kind* of apparatus ever since it was discovered.

Radio becoming popular almost over night, created an instant demand far exceeding the supply, and brought onto the market a flood of unreliable, inadequate and disappointing material.

Avoid that "most embarrassing moment" when something goes wrong just as you expect to entertain your friends, by asking for SIGNAL when you want Radio parts or sets. You'll never be disappointed.

For sale by dealers everywhere
You can get it if you insist

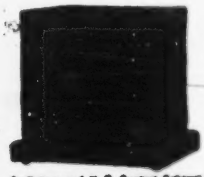

Audion and V. T. Detector Cabinet

Designed for use with old style super-sensitive audiotron as well as modern four prong tube. Potentiometer control of plate voltage for either tube, so best operating position on their characteristic curves is easily found.

SIGNAL Electric Mfg. Co.

Factory and General Offices:
2012 Broadway, Menominee, Mich.

Atlanta Boston Cleveland Chicago Minneapolis
Montreal New York Pittsburgh St. Louis
San Francisco Toronto

(You'll find our branch offices in the Telephone Directory

Coupon for Catalog of Radio Satisfaction

Please send your interesting catalog of SIGNAL parts and sets to the name and address written on the margin of this page.

DUO CONDENSERS

Duo condensers are made for those who appreciate better apparatus. They are made in the following sizes and styles:

DUO	3—Pancake	$2.25
DUO	5—Pancake	2.50
DUO	13—Pancake	3.00
DUO	23—Pancake	3.50
DUO	23 Straight	4.50
DUO	43 Straight	5.75
DUO	23 Vernier	6.00
DUO	43 Vernier	7.50

Larger sizes and styles especially for use in the super-heterodyne circuit.

Sold through dealers or direct

H. F. GELDMEIER CO.
1008 French Street - - Erie, Pa.

Send two cent stamp for circular

Dealers Note—If your jobber cannot supply you order direct

12.85 25 cal. Genuine German MAUSER

Long range, hard pow-er prom. Latest model 6 shot automatic. Shoots standard metal case. Guaranteed to come—just as the picture—perfect, accurate. Weighs only 2 lbs. Length of bbl. 6½ in. Length overall 10½ in. Regular value $15.00. Our price $12.85. All our guns brand new latest model—guaranteed genuine imported.

SEND NO MONEY

Pay Postman on Delivery. Satisfaction Guaranteed or money promptly refunded.

8.45 25 cal. Blue steel finish, fine sights, 6 shots, 4 in. barrel, 9 in. overall. Regular value $10.00. Our price $8.45. MILITARY TYPE AUTOMATIC—25 cal. 6 shot, extra magazine FREE. Just like the real "Army" $15.00. Special FREE BARREL REMOVER $7.45. 25 cal. $8.45.

UNIVERSAL SALES CO.
141 Broadway BARK 4454 New York City

"MICROSTAT"
A Vernier Throughout Its Range
Indispensable for New Armstrong Circuit

Price $1.50
Add 10c for postage

Stepless Filament Control

WALD ELECTRIC CO.
Manufacturers
101-103 Varick Street New York

The alliance of the "Teletype" and Hertzian waves is indicative of great possibilities in the future, if preliminary tests are to be accepted as a criterion of service. Speed in the transmission of communications to an aircraft is, of course, an outstanding virtue. Communication between ships and aircraft will be thus facilitated with the element of error minimized. Printed directions to scouting and combat airplanes may be issued by the commander-in-chief of the fleet and scouting aircraft will be enabled to convey accurate and detailed information to the commanding officers. News, market quotations, weather reports, and similar information may be faithfully copied on board passenger-carrying aircraft, as the principle of "tell it to the type" is operative as a duplex system of communication—both for the transmission and reception of wireless signals aloft.

Station 2LH at White Plains, N. Y.

(Continued from page 856)

trolling the charging outfit, which consists of a low-voltage transformer and rectifier tube.

Not only have good transmitting results been obtained but stations as far west as old Cape Los Angeles have been logged and the station's log shows that every district of

The RADIO-PHONE SALES CORP.
Announce
Long Range Receiving Sets
All Units in One Cabinet
TERMS TO DEALERS
Dept. 7-S, 308 S. Green St., CHICAGO, ILL.

4 of our many big bargains

RHEOSTAT

Highly finished bakelite rubber. A beautifully designed precision instrument that is a decided ornament to any Radio Set
RHEOSTAT with DIAL $1.35
RHEOSTAT WITHOUT DIAL $1.10

VARIOMETER

No wood! No composition! Rotor and Stator of hard rubber, best insulator known! Nickel-plated hardware. Beautiful design. Shape of Stator conforms with that of Rotor, saving space on panel board $5.00

VARIOCOUPLER

Fiber tubing, hard rubber Rotor. Green covered wire. Nickel-plated hardware. Large Size, 180 adjustment $4.50

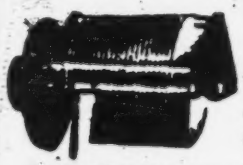

Variable Condenser
23 Plates $3.50
43 Plates $4.50
Nickel-plated Hardware, Aluminum Plates, Specially Constructed

UTILITY ELECTRICAL PRODUCTS COMPANY
4560 Congress St. CHICAGO
DEALERS: write for proposition

TELMACO
Stands for
Dependable Radio Equipment
THE
TELMACOPHONE

A Telmaco Product
for Which We Are Having
A Phenomenal Demand
Scientifically Constructed
Unreservedly Guaranteed
Reasonably Priced
Complete with Type C Baldwin Unit Attached—$20.00

DEALERS: We are distributors for nearly all standard lines. Full discounts on the Telmacophone. Write for proposition on our complete line.

RADIO DIVISION
TELEPHONE MAINTENANCE CO.
29 So. Wells St. Dept. B, Chicago, Illinois

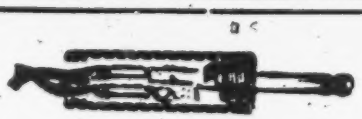

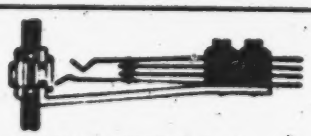

Carter "TU-WAY" Plugs and "HOLD-TITE" Jacks

The Carter TU-WAY Plug permits two phone sets to be connected. Takes ALL types of tip cord terminals or wire. Not breakable at the point. Not affected by body capacity. No space used to hold Extra Pc. Price, $1.50 each.

The Carter "HOLD-TITE" Jack eliminates usual insulation stack-up between frame and springs. Wide spaced terminals, heavy tapered phosphor bronze springs, heavy pure silver self cleaning contacts. No spacer washers. Uses 3 springs. Prices, 70c to $1.10.

Write for Bulletin on TU-WAY and other Carter Products

CARTER RADIO CO. 209 S. State Street CHICAGO

RADIO ANTENNA TOWERS

Simple. Sturdy. Easy to erect. Built of galvanized steel. Will last for years. 100 ft. high or less. Fitted to take pipe mast at top. Immediate shipment. Write TODAY for prices.

Radio Department
STOVER MFG. & ENGINE CO
FREEPORT, ILLINOIS

PLAINTIFFS' EXHIBIT NO. 61, Sheet 1
(Page 73 of Radio Phone Receiving,
published 1922), by D. Van Nostrand
Co. N.Y.C)

that it actuates member *l*, rigidly attached to one end. This member is also anchored at its other end to the mica diaphragm *m*, which is the producer of the sounds. As the currents flow through the bobbins *bb*, the lever-diaphragm vibrates about its center point, thereby operating the mica diaphragm. This type of receiver is not only more

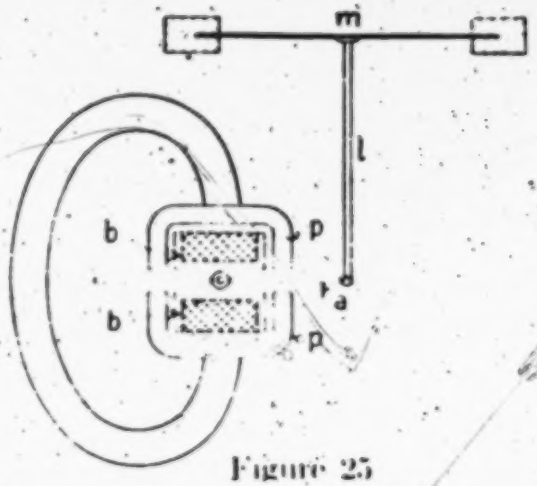

Figure 25

sensitive than the ordinary one, but also better because of the purity of the sounds produced. This is due in great measure to the lack of metallic ring in the tones emitted.

Typical Crystal Detector Set. — Figure 26 illustrates the wiring diagram of a crystal detector set which, although elaborate, will afford good tuning qualities, and respond to a wide range of wavelengths. It will be noted that the antenna circuit includes the primary coil and a short-wave variable condenser. The coil *P* consists of 60 turns of wire wound upon a cylindrical tube about 3 inches in diameter. A tap is carried out at every tenth turn, as indicated. By moving the switch, *A*, to include more turns in the circuit, the wavelength of the antenna is

increased; a decrease in the number of turns decreases the wavelength. Similarly, when the capacitance of the condenser *B* is increased, the wavelength is increased, and vice versa. By manipulating *P* and *B* simultaneously very fine tuning of the

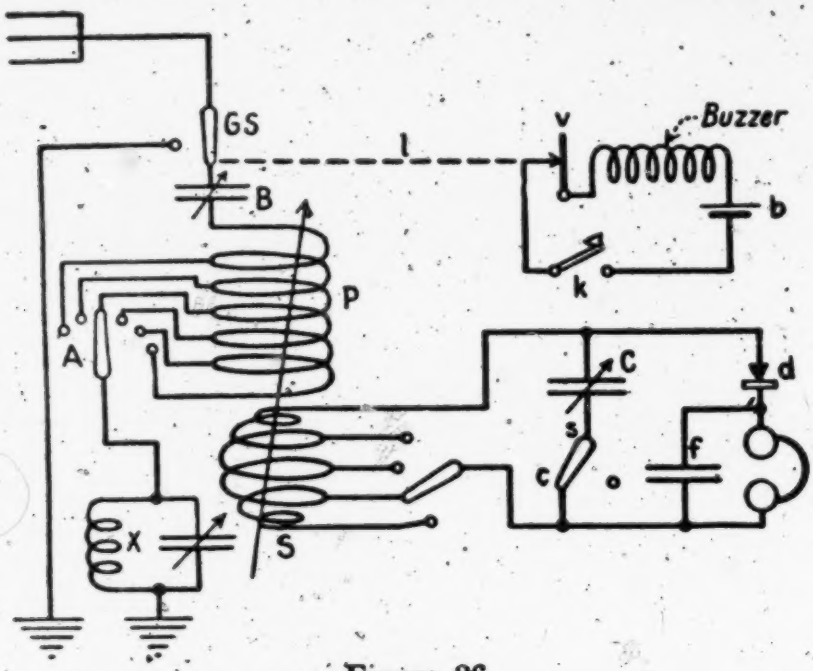

Figure 26

antenna circuit is possible. The maximum capacitance of *B* is 0.0005 microfarads.

The secondary circuit consists of another inductance *S*, also consisting of 60 turns of wire, and a variable condenser *C*. The coil *S* is wound on spherical mounting placed near one end of the cylinder supporting *P*. The coil *S* is so arranged that its axis may be shifted from coincidence with the axis of *P*, to a position displaced 90 degrees from it, thus varying the coupling from a maximum to a minimum. To facilitate tuning, the coil *S* is tapped at every 15 turns and the taps are brought out to a suitable switch. The condenser *C* is similar to condenser *B*, and may be inserted in the secondary cir-

cuit or omitted therefrom by means of switch *s*. The telephones, which should have a resistance of about 3000 ohms, are placed in circuit with the detector and the fixed blocking condenser *f*, as shown in the diagram. Condenser *f* should have a capacitance of 0.002 microfarads. The detector *d* may be either a galena or a silicon crystal.

In order to find a sensitive position on the crystal, a small buzzer is often employed. The circuit of this buzzer also is shown in Figure 26; the letters *b* and *k* signify respectively the battery and the key. A lead, *l*, is taken from one side of the vibrator V, and attached to the antenna or ground terminal of the set. With *k* closed, the surface of the crystal is explored until buzzing in the head telephones indicates a sensitive spot.

Tuning of this set is accomplished in a manner similar to the one described above. The only difference in this case is that for each setting of switch *A*, the condenser *B* is varied throughout its entire range.

The above receiving device gave excellent results when connected to a two-wire, inverted L type antenna, having a height of 20 feet and a length for the horizontal portion of 50 feet. Care must be taken not to omit the antenna grounding switch *GS*, since a good grounding switch affords protection against lightning, while a poor switch or the total absence of one introduces a lightning hazard.

Interference. — Perhaps the most annoying feature of radio telephony and telegraphy is interference by outside stations or sources. In some cases, this interference may be removed, while in others,

PLAINTIFFS' EXHIBIT NO. 61, Sheet 4. 289– 290

Plate IV. — Above: Crystal detector; *Wireless Specialty Apparatus Company*. Below: "Aeriola, Jr." crystal-detector receiving set; *Westinghouse Electric & Manufacturing Co.*

PLAINTIFF'S 291– 292

PLAINTIFFS' EXHIBIT No. 63, Sheet 1,
(Page 175 of Textbook of Radio,
published by Technical Book Co. N.Y.C.
1922)

WESTINGHOUSE CRYSTAL RECEIVING SET

The Aeriola Jr. consists of a variometer, a two-section fixed mica condenser, one telephone by-pass condenser and a crystal detector contained in a nicely finished wood box having a separate compartment for telephones, the telephones being sold with the set.

The variometer is made of micarta tubing and has a minimum amount of material in the field, thereby reducing dielectric losses. The small mica fixed condenser is connected in series with the antenna and the variometer, the small section of the condenser being used for the reception of wavelengths between 190 and 300 meters and the large section for wavelengths between 300 and 500 meters.

The crystal and telephones are shunted across a certain portion of the variometer, which gives the greatest volume of signal.

Operation

Connections from each section of the small mica condenser are brought out to separate binding posts permitting a change from one wavelength range of the set to the other by merely changing the antenna from one post to the other. With the aerial ground and telephones connected to their respective binding posts it is only necessary to adjust the crystal detector and tune with the variometer handle until the expected signal is heard. After a signal is tuned in further signal strength may be obtained by further adjustment of the detector.

PLAINTIFFS' EXHIBIT NO. 63, Sheet 2
(Page 183 of Textbook of Radio, published by Technical Book Co.N.Y.C. 1922).

293-2

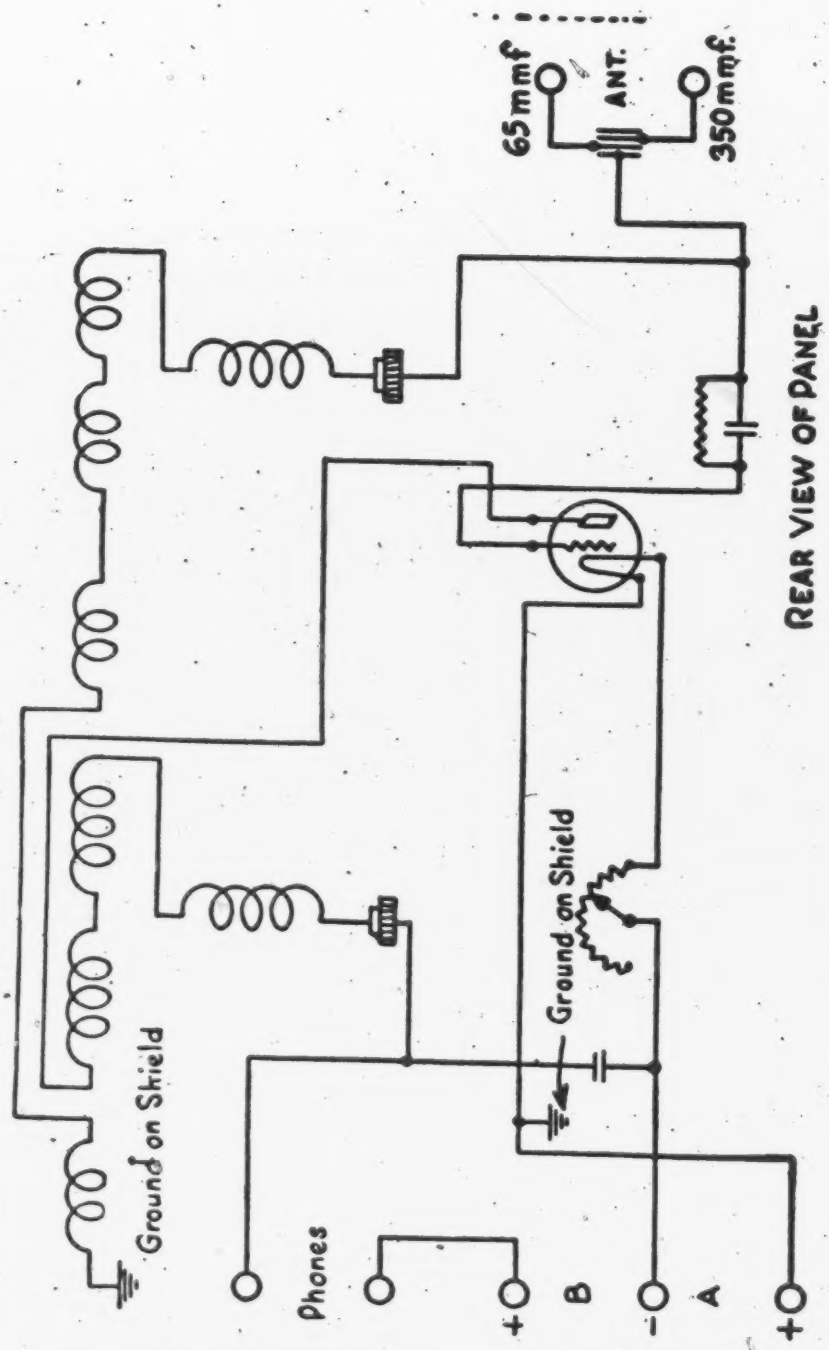

Fig. 62—Aeriola Sr. Regenerative Receiver

PLAINTIFFS' EXHIBIT No. 64, 295— 296
(Page 185, of Textbook of Radio, published by Technical Book Co.N.Y.C. 1922).

AERIOLA SR. RECEIVING SET

The Aeriola Sr., a regenerative set, was designed to satisfy the demand for a vacuum tube set which did not require a storage battery to light the filament. A special tube, developed by the Westinghouse Electric & Manufacturing Company, which requires one 1½ volt dry cell and uses .23 amperes of current to heat the filament and using either 20 or 40 volts as a plate battery, is used with this set.

Construction

The Aeriola Sr. consists of two variometers, the stator windings of each being wound on the same micarta tube, the distance between windings and the value of each stator and rotor winding being such as to give an even increase in regenerative control.

One variometer is used as a tickler winding for securing regeneration and the other variometer serves as a variable inductance which is used in conjunction with the two sections of the small mica condenser to secure the wavelength range of 190 to 500 meters.

A rheostat having the resistance wire wound on special fibre support and the resistance unit secured to a moulded porcelain base is used to control the filament current.

The bulb socket is set back from the panel so as to allow the top of the tube to protrude through a hole in the panel far enough to permit removal of the tube, yet not so far as to prevent the lid of the box being closed when the tube is in the socket.

PLAINTIFFS' EXHIBIT NO. 65,
(Page 134 of "Radio Phone Receiving, published 1922 by D. Van Nostrand Co. N.Y.C.)
297—298

amplification, and a special system of amplification that avoids some of the limitations both of audio-frequency amplification and of simple radio-frequency amplification will be described later.

Regeneration Without Oscillation for Increasing Response in Telephone. — Consider the details of regenerative reception by reference to Figure 51, which is identical with Figure 30, except for the presence of the "tickler coil." In both figures, when an oscillation is impressed by a passing wave, the current in the plate circuit will have a radio-frequency pulsation in addition to the audio-frequency pulsation that actuates the telephone receiver (see Figure 31); or, what is the equivalent

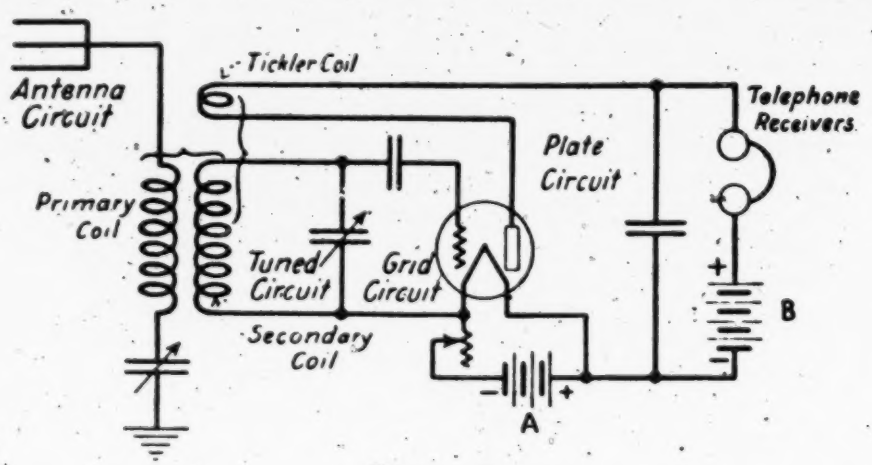

Figure 51.

there is present in the plate circuit a radio-frequency current superposed on the audio-frequency current and on the direct current. No use is made of this radio-frequency plate current in the circuits of Chapter IV; but in Figure 51 the radio-frequency plate current flows through the tickler coil and so induces a radio-frequency voltage in the secondary coil coupled therewith. If these coils have the right

PLAINTIFFS' EXHIBIT No. 66, Sheet 1, 299–300
(Page 177 of Textbook of Radio, published by Technical Book Co. N.Y.C. 1922)

WESTINGHOUSE TYPE R. C. SET

The type RC regenerative set was designed to be used for operation of a loud speaker and for long distance reception with the use of telephones.

Construction

This set consists of the type RA tuner, the type DA detector amplifier and the type CB loading coil. The wavelength range of the set is 180 to 700 meters, with the loading coil short circuited, and 1600 to 2800 meters with the loading coil in circuit. This range permits reception of amateur broadcasting, up to 700 meters, as well as commercial and time signals between 1800 and 2800 meters, with the loading coil in circuit.

The tuner consists of a variable condenser and variometer mounted on the same shaft, as a tuning unit. The capacity and inductance of the circuit is thereby increased simultaneously and in the proper L to C ratio. The tuning condenser is paralleled by a three-plate vernier condenser for sharp tuning. A tapped tickler is used on the type RC set and is wound on the same tube and alongside of the stator winding of the variometer. The tickler is so tapped as to permit close adjustment of regeneration, thereby securing maximum sensitivity.

The amplifier used in this set consists of a socket for the detector tube, telephone by-pass condenser, two sockets for amplifier tubes, two special audio frequency transformers and two moulded porcelain base

PLAINTIFFS' EXHIBIT NO. 66, Sheet 2,

301- 302

rheostats. The detector and amplifier tubes are mounted on a flexible rubber shock absorbing cradle, which prevents audio noises due to local vibrations from being amplified. Three jacks are provided so that the detector tube, first step of amplification, or second step of amplification, may be used.

The loading coil used with the set consists of two universal wound coils, one used as a loading inductance and the other as a tickler for regenerating the loading inductance. The two coils are mounted in a block moulded bakelite enclosed case which is equipped with a plunger type switch to short circuit the loading coil when using the short wavelength range of the set. The switch permits permanent installation of the loading coil on the set. The leads of the coils are brought out to the four legs of the switch blades, an extension of these blades also serves as a connection to be clamped under the binding posts of the set.

An electro-static shield is used to minimize the capacity effect of the operator's body, this shield is located on the back of the panel and is kept at ground potential.

The tickler and tuning knobs are secured to Micarta shaft extensions, thereby further minimizing capacity effect of the operator's body. The connections are brought out to the rear of the tuner and amplifier by means of extension rods, and the high potential connections are thereby kept away from the operator, avoiding the capacity effect of the body, and, detuning and howling, as consequent results.

The lead from the grid inductance is connected to the positive side of the filament of the detector tube and the transformer secondary winding is connected to the negative side of the filament of the amplifier

303–304

81

PLAINTIFFS' EXHIBIT NO. 66, Sheet 3.

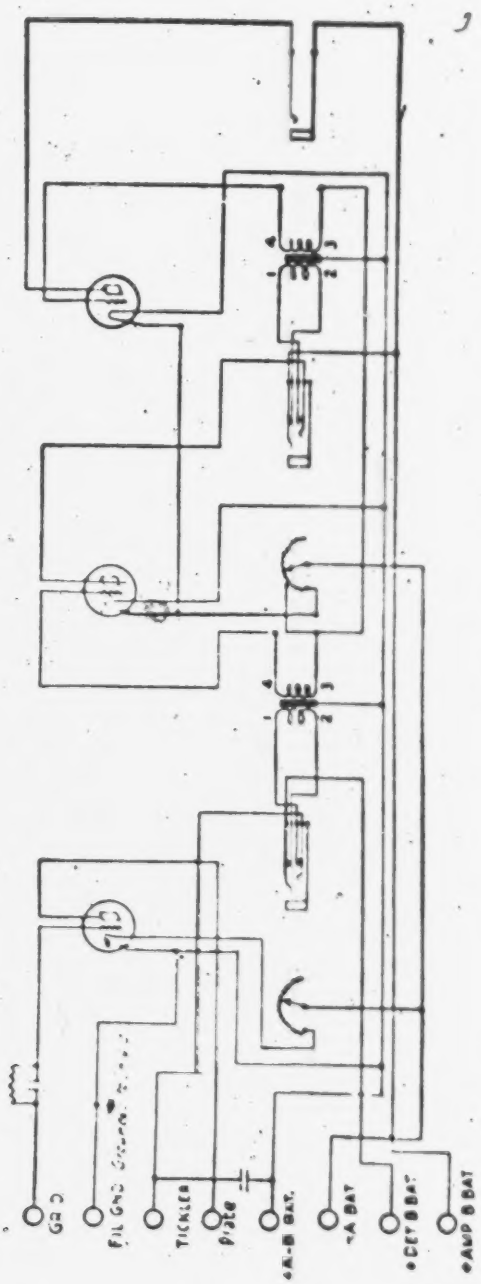

Fig. 60

Wiring Diagram of Detector and Two-Stage Amplifier

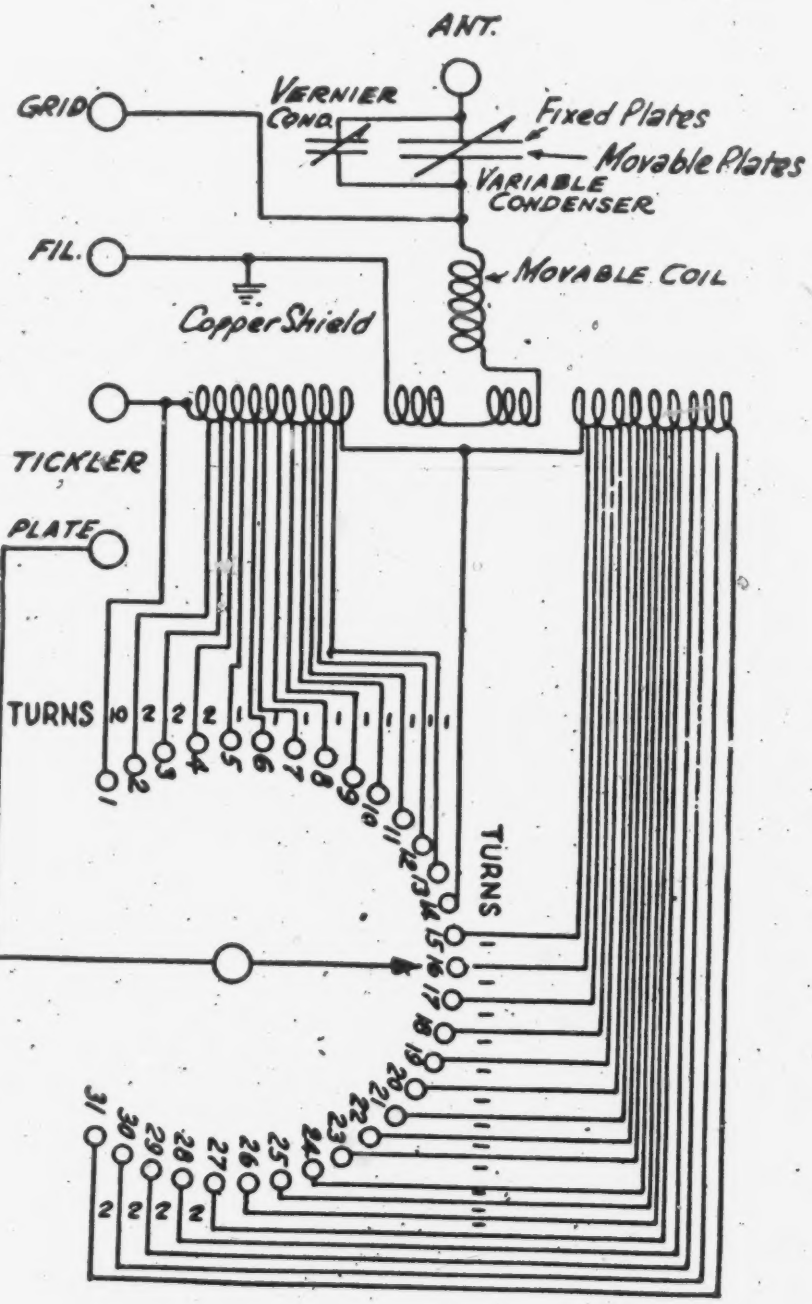

Fig. 61—Westinghouse Single Circuit Type Radio Receiver

tubes, with a bias of approximately one volt obtained by keeping a certain portion of the filament rheostat between the transformer winding and the filament of the tube. This grid bias allows a material increase in amplification, and is such as to cause the least amount of distortion in the reception of speech or music.

In connecting up the Type RC set it is necessary to put a jumper (furnished for that purpose) between the grid binding post of the tuner and the grid binding post of the amplifier, and also a jumper between the tickler binding post of the tuner and the tickler binding post of the amplifier. The loading coil is then connected between the filament post of the tuner and the filament post of the amplifier and between the plate binding post of the tuner and the plate binding post of the amplifier in such a manner as to have the loading coil switch handle vertical and at the top of the cabinet. (In the absence of a loading coil put jumpers in between the tuner and amplifier to replace the loading coil.) The aerial and "A" and "B" batteries are to be connected to their proper binding posts of the set and the ground connection taken off of the filament binding post of the amplifier. If a "soft" (low vacuum) tube is used as a detector, do not connect more than 22½ volts across the detector "B" battery binding posts.

Operation

To operate the set, plug the telephones in on the detector, first step of amplification or second step of amplification, adjust the tickler for regeneration by means of the tickler dial on the panel and tune by means of the large tuning dial on the panel until the

desired signal is heard. For a finer adjustment of tuning it is necessary to use the small vernier dial to the left of the tickler dial. After a signal has been tuned in accurately, a further adjustment of the tickler for maximum regeneration will increase the signal strength materially.

Care should be taken not to use too much amplification. If the music or speech being received is sufficiently strong on the first stage of amplification, do not attempt to use more amplification. The use of more amplification would "block" the second amplifier tube and cause local atmospheric disturbances to be amplified in excess of the signal amplification. The blocking of the second tube causes the music or speech to be distorted, the amplification of atmospheric disturbances in excess of the amplification of signal, naturally does not improve the clearness of the music or speech received.

When using the loading coil to secure the wavelength range between 1600 and 2800 meters, the plunger switch is pulled up. To use the set for reception of wavelengths between 180 and 700 meters, the loading coil plunger switch must be pushed down, thereby shortening the loading coils out of circuit.

PLAINTIFFS' EXHIBIT No. 66, Sheet 7. 311–312

AERIOLA SR. RECEIVING SET 187

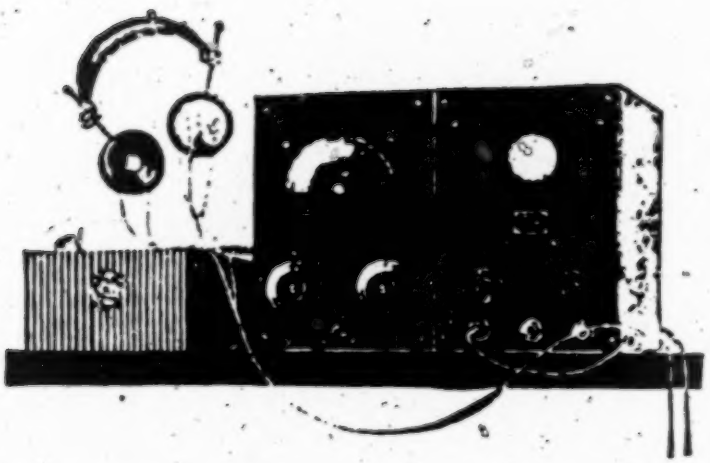

Fig. 61 Westinghouse R. C. Receiving Set

PLAINTIFFS' EXHIBIT No. 67,

Diagram including Fig. 1 of Patent 1,455,141 and form of current in different sections).

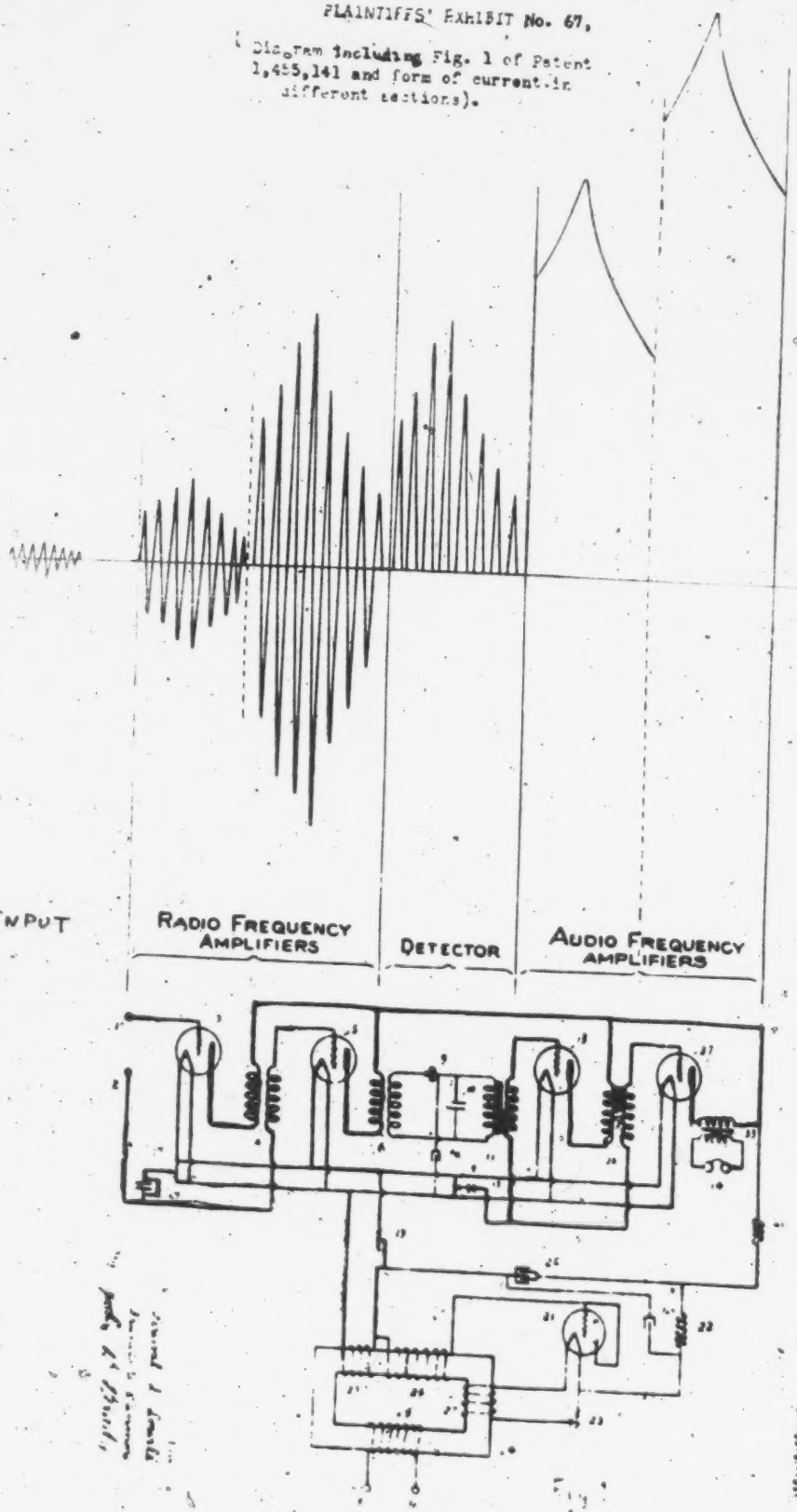

U. S. DISTRICT COURT

Plaintiffs' Exhibit No. 16

Clerk

May 15, 1923

1,455,141

A

RADIO FREQUENCY AMPLIFIER - ON ALTERNATING CURRENT

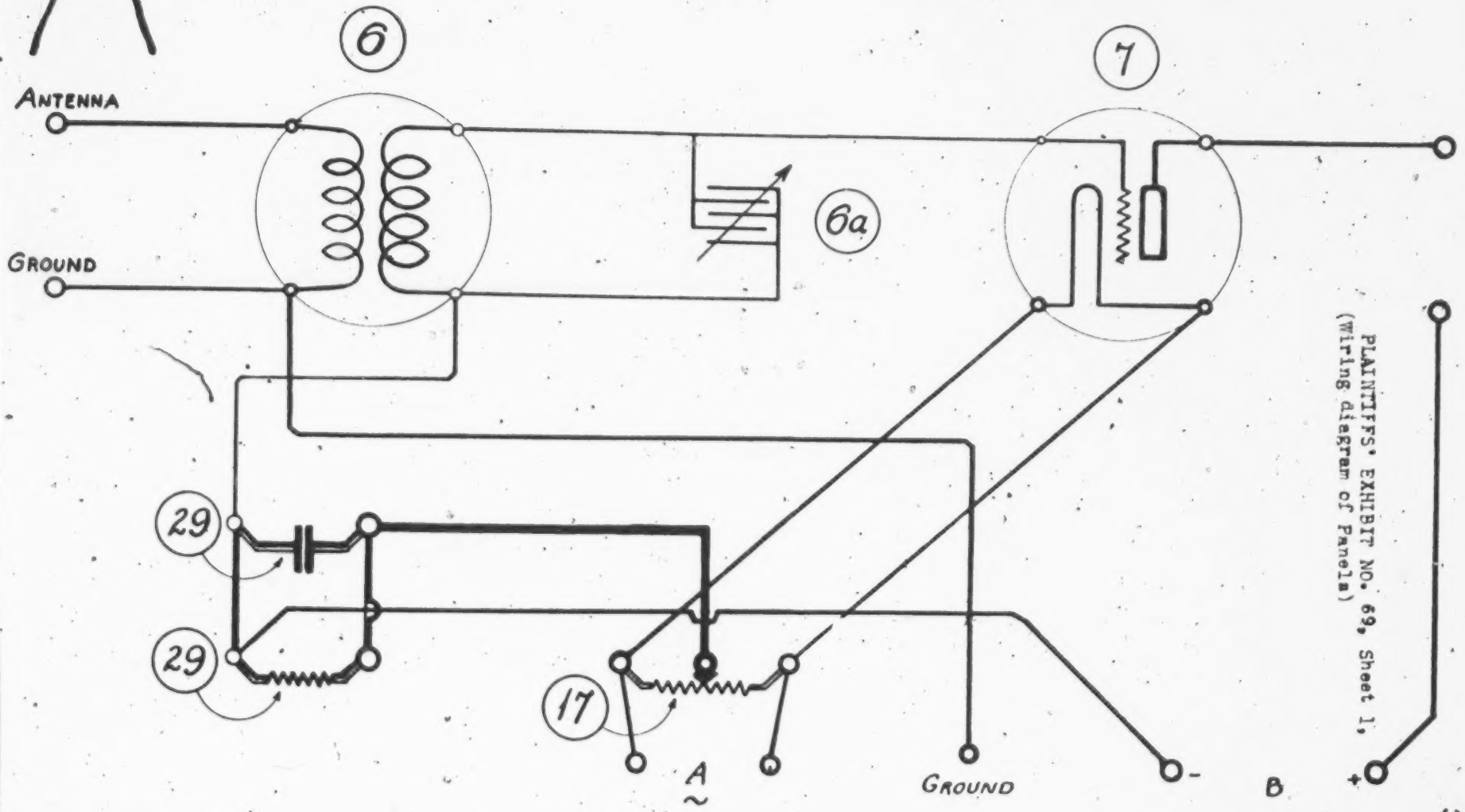

PLAINTIFFS' EXHIBIT NO. 69, Sheet 1,
(Wiring diagram of Panels)

CRYSTAL DETECTOR - ALTERNATING CURRENT USE
PLAINTIFFS' EXHIBIT NO. 69, Sheet 2,
9a
10
-B
8a
9
8
TRAN
B

C

AUDIO FREQUENCY AMPLIFIER ~ ON ALTERNATING CURRENT

Plaintiffs Ex 69
64

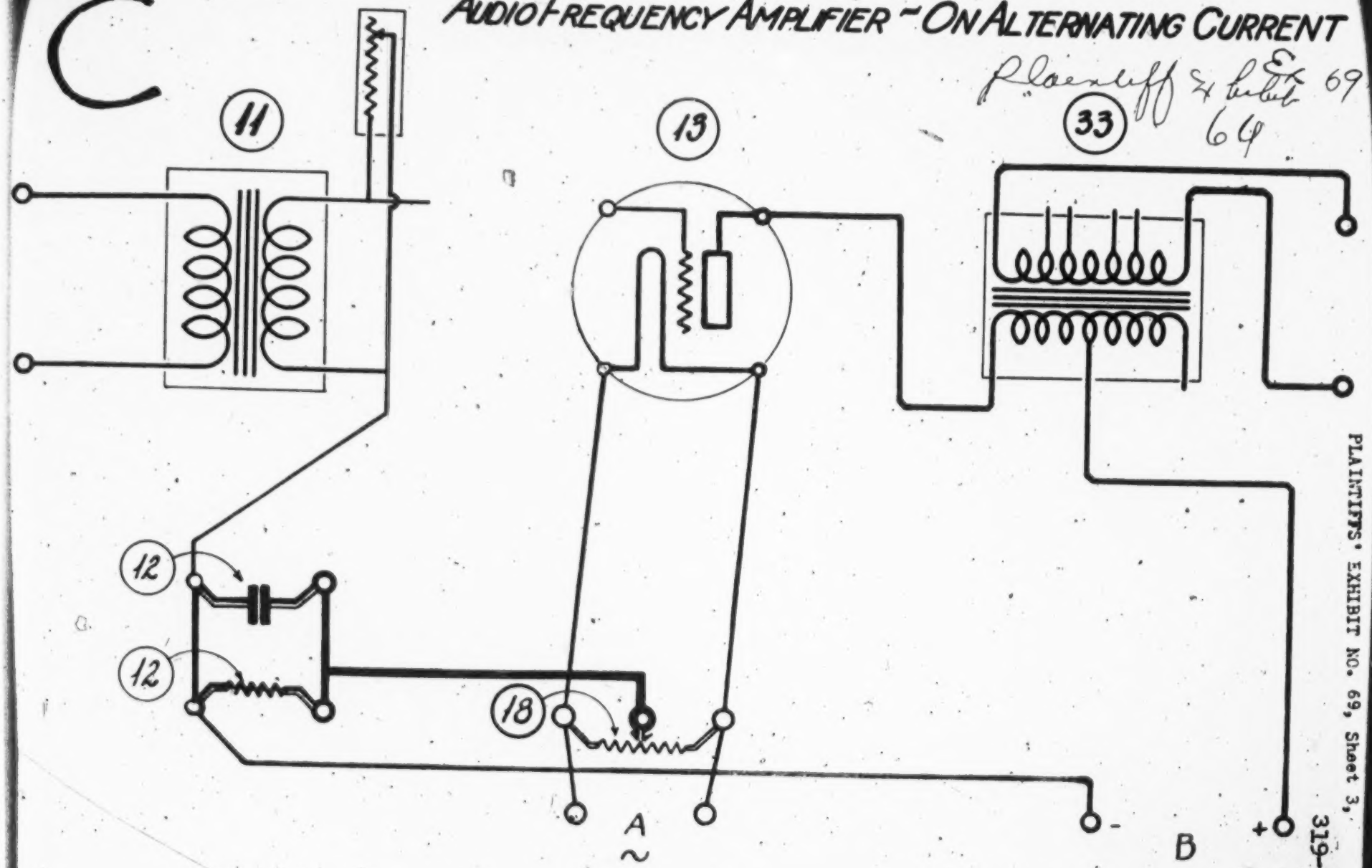

PLAINTIFFS' EXHIBIT NO. 69, Sheet 3,

319-320

E

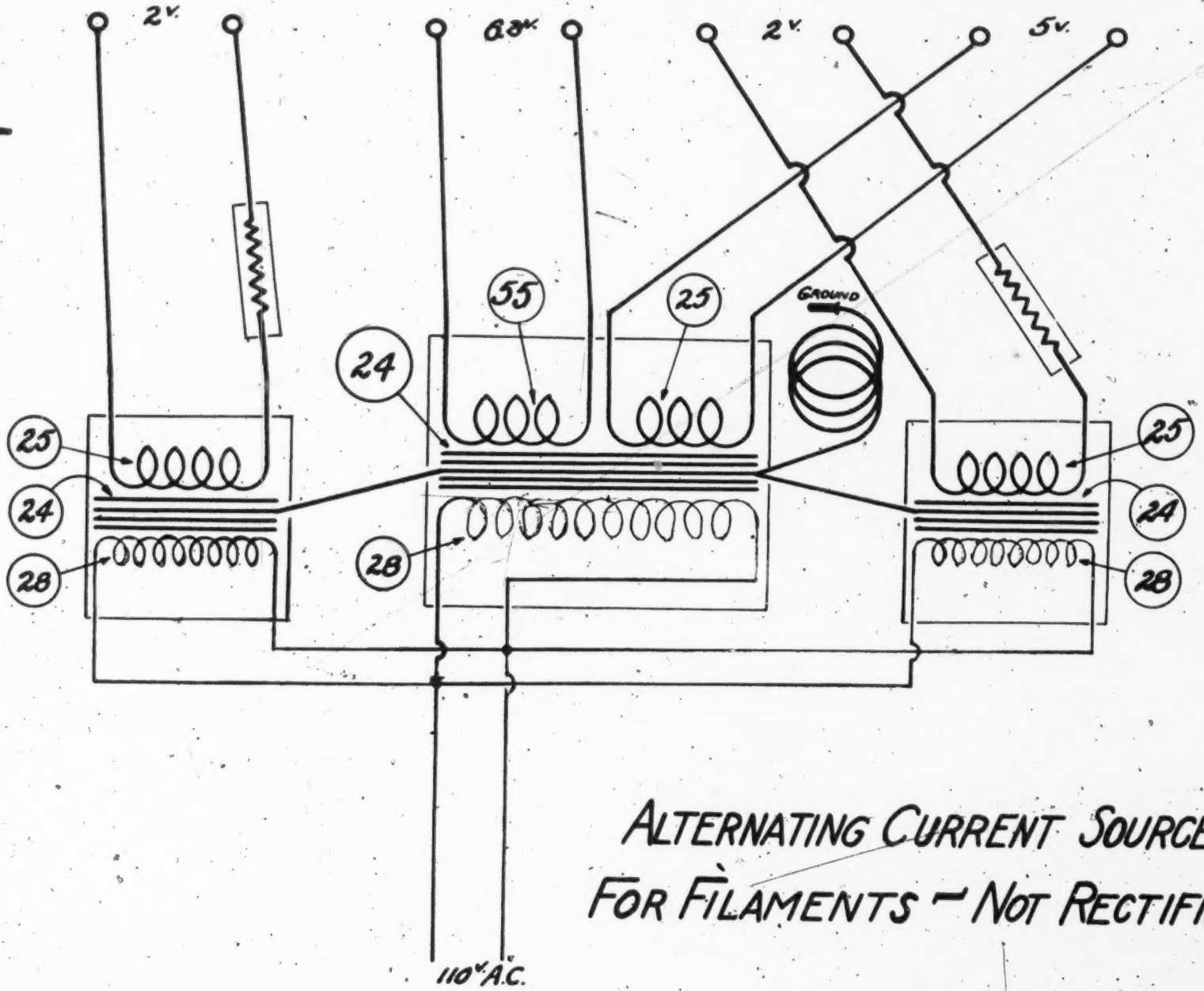

ALTERNATING CURRENT SOURCE
FOR FILAMENTS — NOT RECTIFIED

PLAINTIFFS' EXHIBIT NO. 69, Sheet 4,

321- 322

Ex. 69

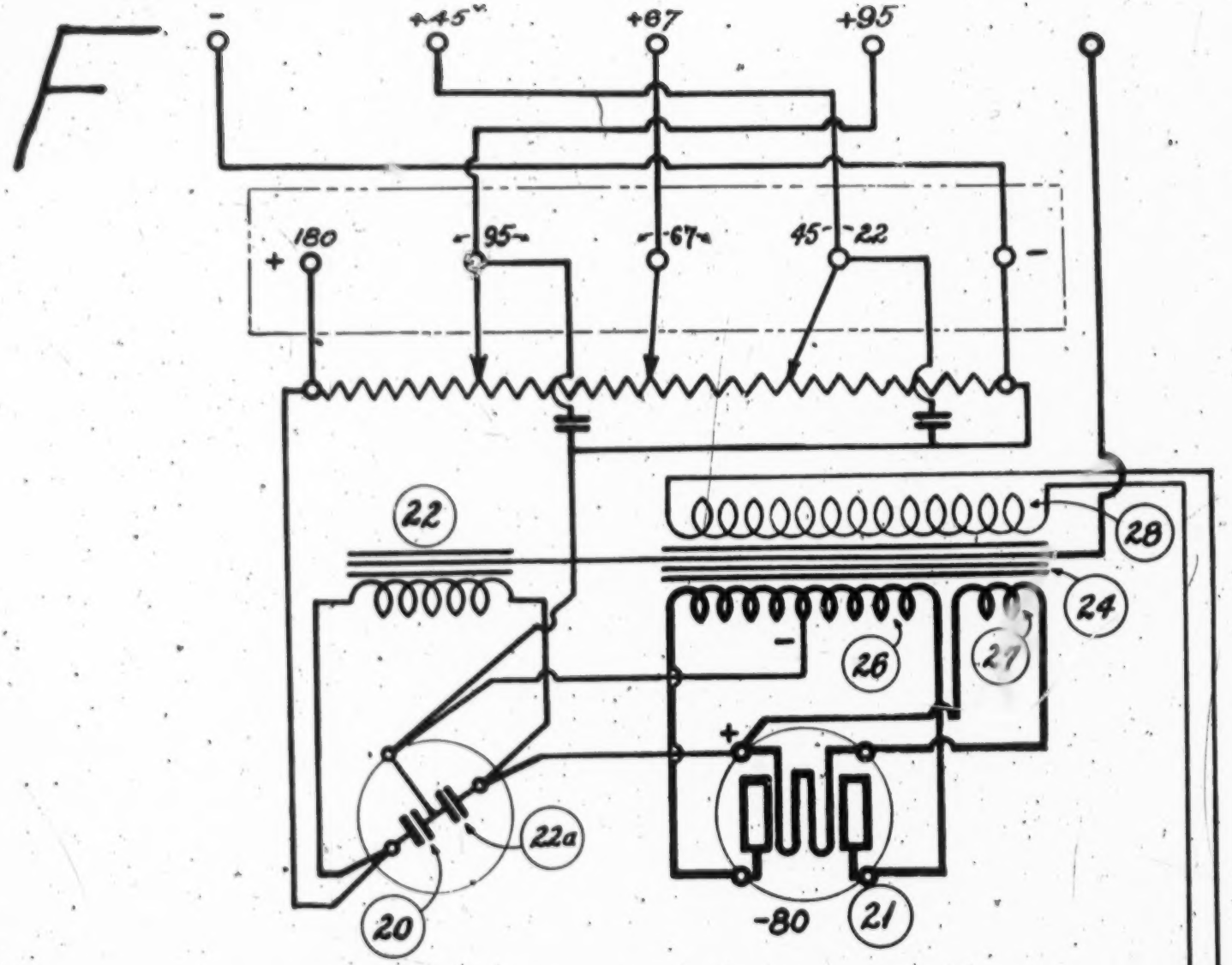

ALTERNATING CURRENT SOURCE FOR PLATES -
RECTIFIED AND FILTERED

PLAINTIFFS' EXHIBIT NO. 69, Sheet 5,

323-824

DETECTOR - ON ALTERNATING CURRENT - USING TYPE - 30 TUBE

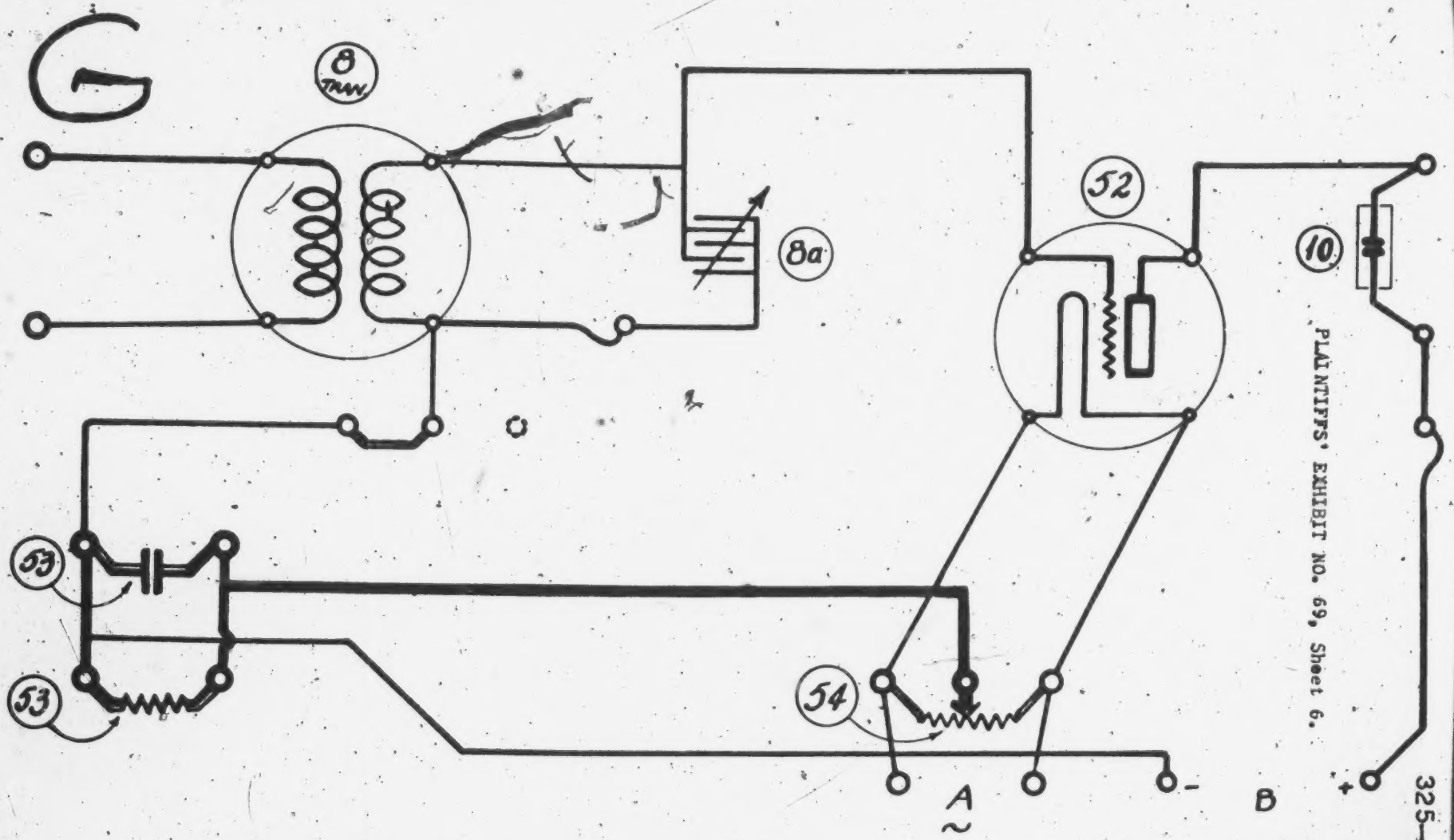

PLAINTIFFS' EXHIBIT NO. 69, Sheet 6.

325-326

DETECTOR - ON ALTERNATING CURRENT - USING TYPE -37 TUBE

Ex. 69

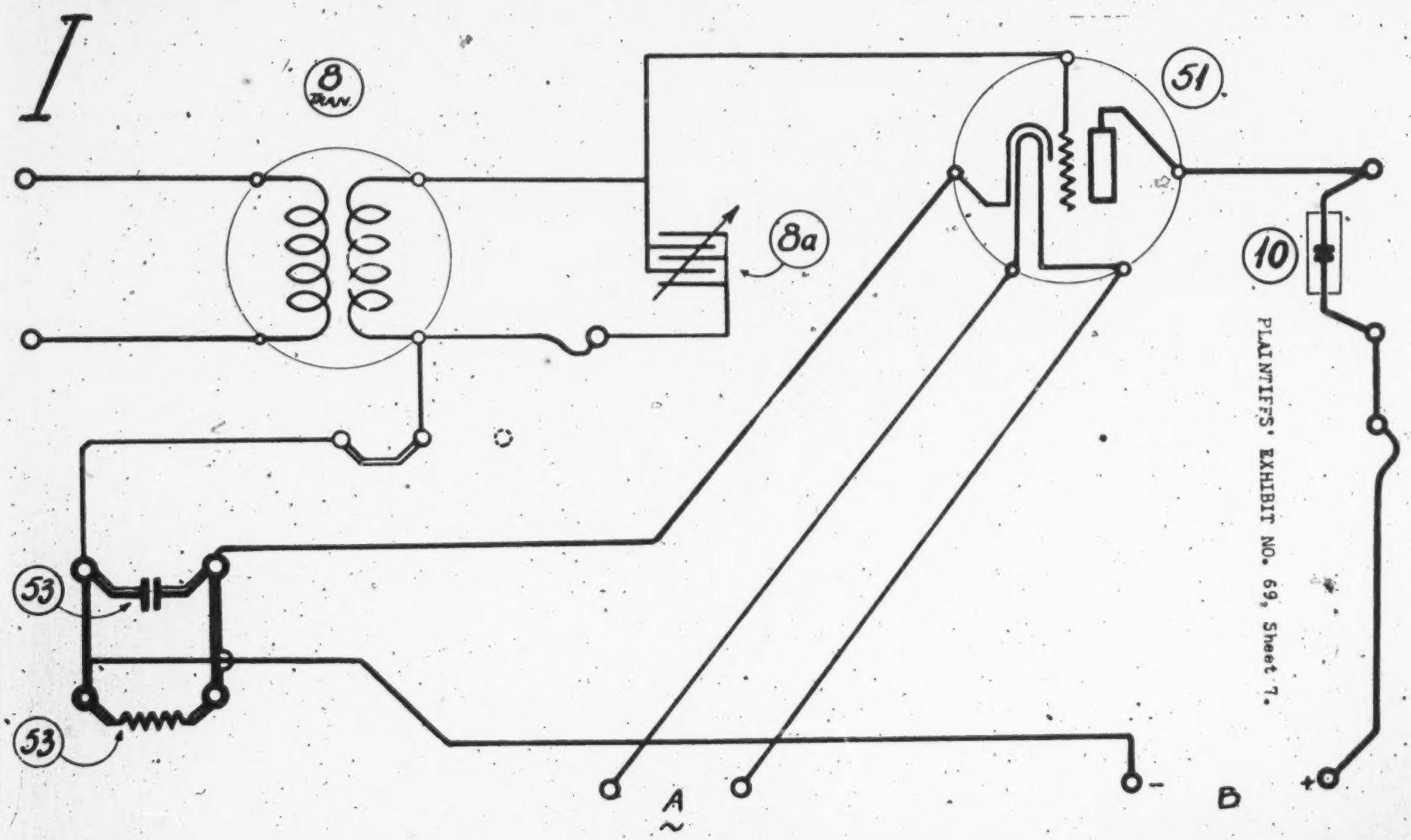

PLAINTIFFS' EXHIBIT NO. 69, Sheet 7.

327-328

ALTERNATING CURRENT SYSTEM — WITH HUM ELIMINATORS — CRYSTAL DETECTOR

Sx 70

Pltf X

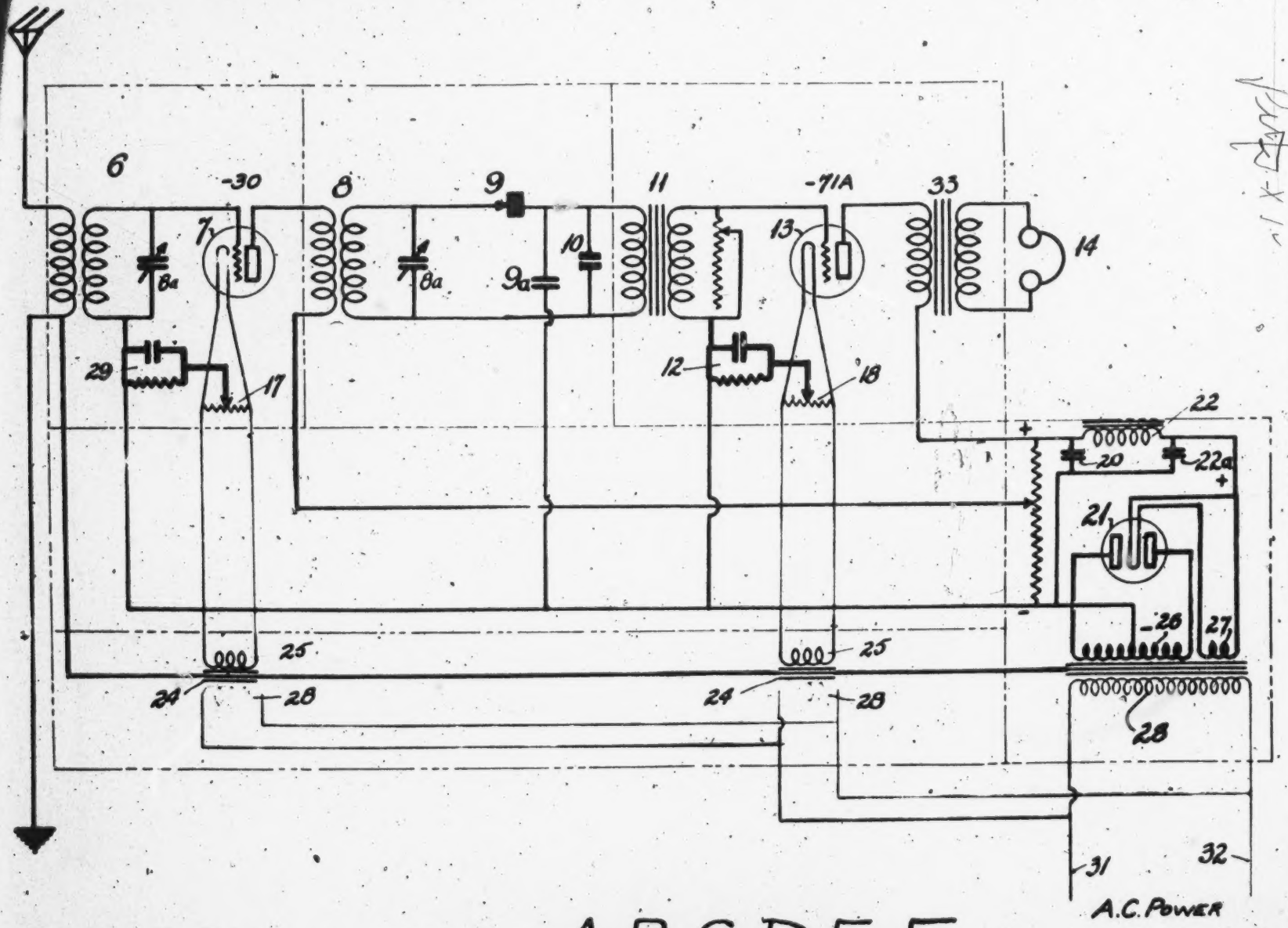

CHARTS A, B, C, D, E, F

PLAINTIFFS' EXHIBIT NO. 70.
(Wiring diagram of Panels, A, B, C, D, E, F, combined)

329-330

ALTERNATING CURRENT SYSTEM – WITH HUM ELIMINATORS – TYPE -30 TUBE DETECTOR

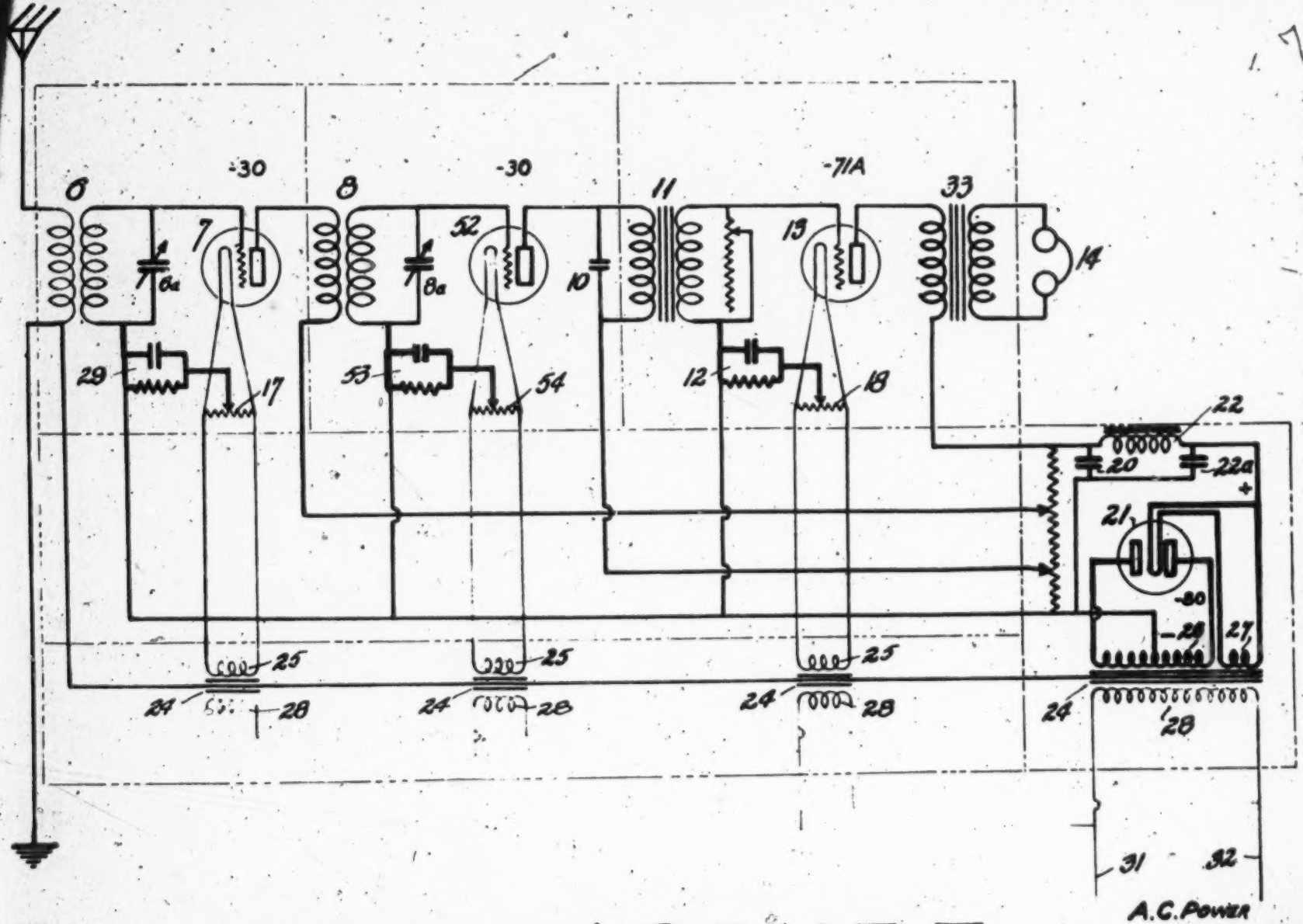

PLAINTIFFS' EXHIBIT NO. 71.
(Wiring diagram of Panels, A, G, C, H, E, F, combined.)

CHARTS A, G, C, H, E, F

331-332

PLAINTIFFS' EXHIBIT NO. 72,
(Wiring diagram of Panels, A, I, C, J, E, F, Combined)

333 - 334

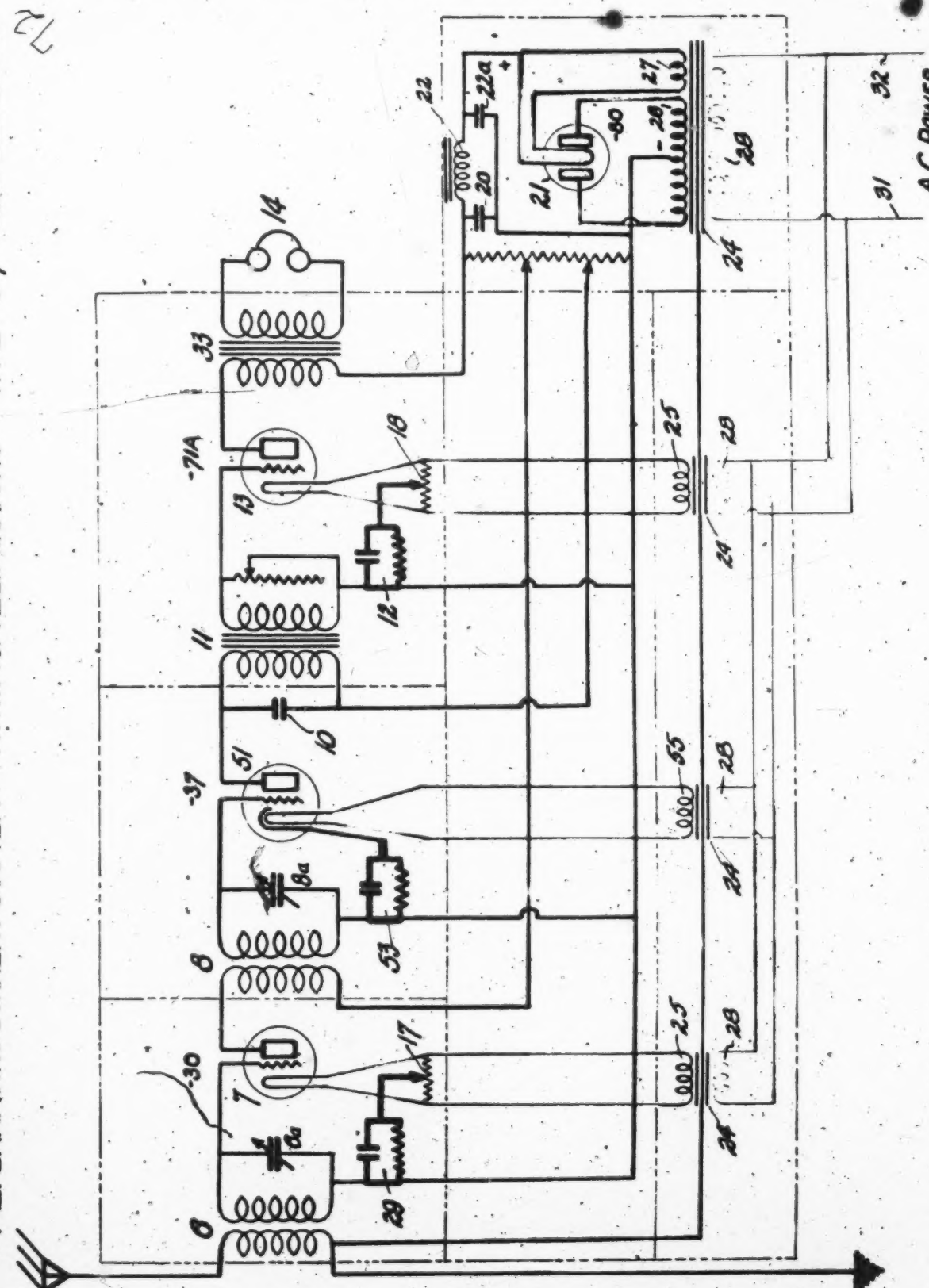

[fols. 335 & 336] PLAINTIFFS' EXHIBIT No. 74

(Stipulation as to Defendants' Circuit)

This Exhibit is the same as Plaintiffs' Exhibit No. 93. And is printed in this Volume of Exhibits at pages 381-382.

[fols. 337 & 338] PLAINTIFFS' EXHIBIT No. 75

(Colored photostats of wiring diagram of Defendants' sets SW 104, 105, 106, 108, 109 are here omitted, the same being attached to Plaintiffs' Exhibits No. 93 and 94, and will be found at pages 383-387-432-408-444 and 466 of this volume of Exhibits.)

THE SUPERHETERODYNE TYPE OF RADIO RECEIVER — NO POWER CIRCUITS SHOWN

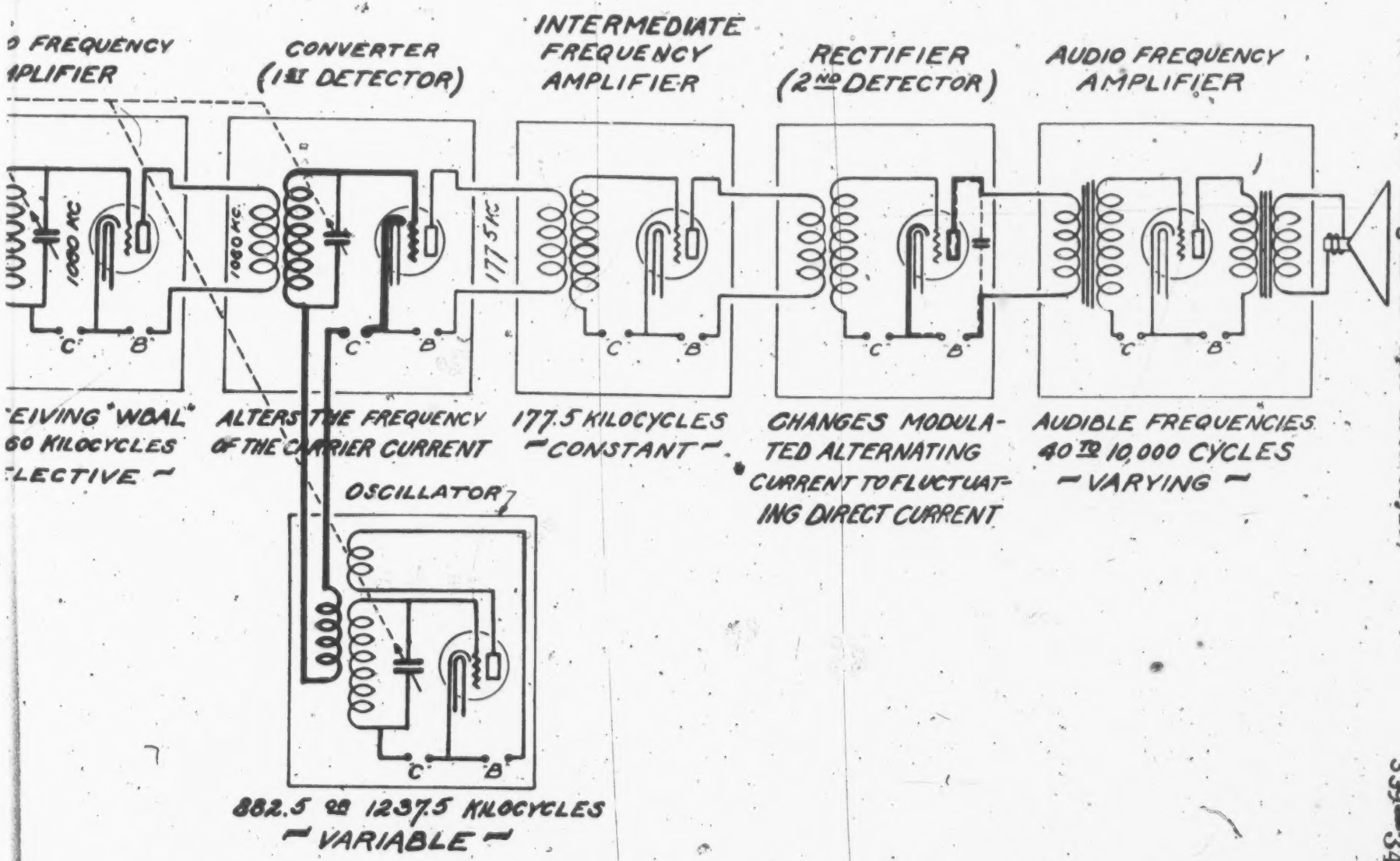

PLAINTIFFS' EXHIBIT No. 76
(Schematic diagram of Super-heterodyne)

339—340

663

THE SUPERHETERODYNE TYPE OF RADIO RECEIVER — NO POWER CIRCUITS SHOWN

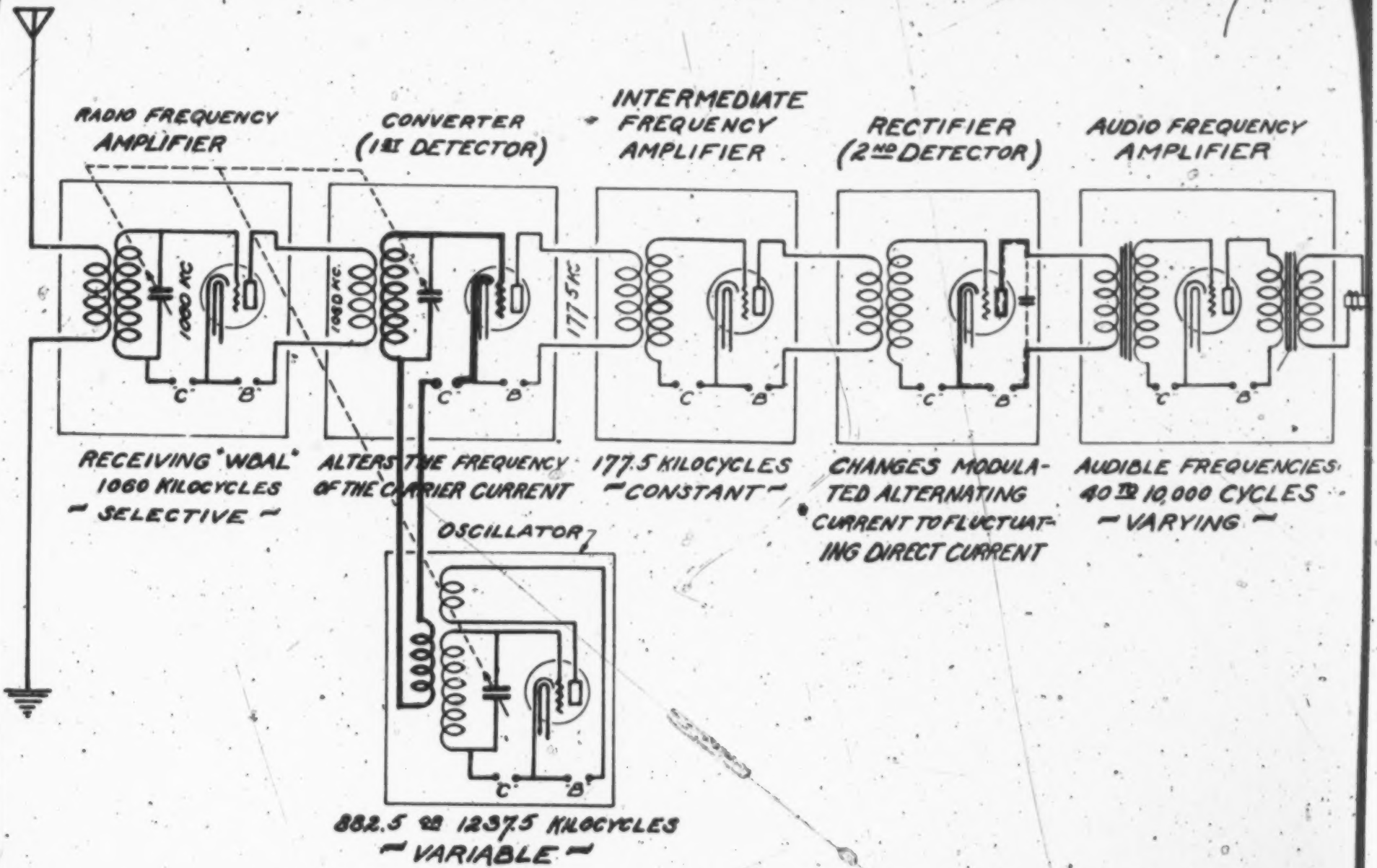

PLAINTIFFS' EXHIBIT NO. 77, Sheet 1.
(Simplified colored diagram of circuits of
Defendants' Set S.W. 104)

Pltf's 77

~Stewart-Warner Model 104~

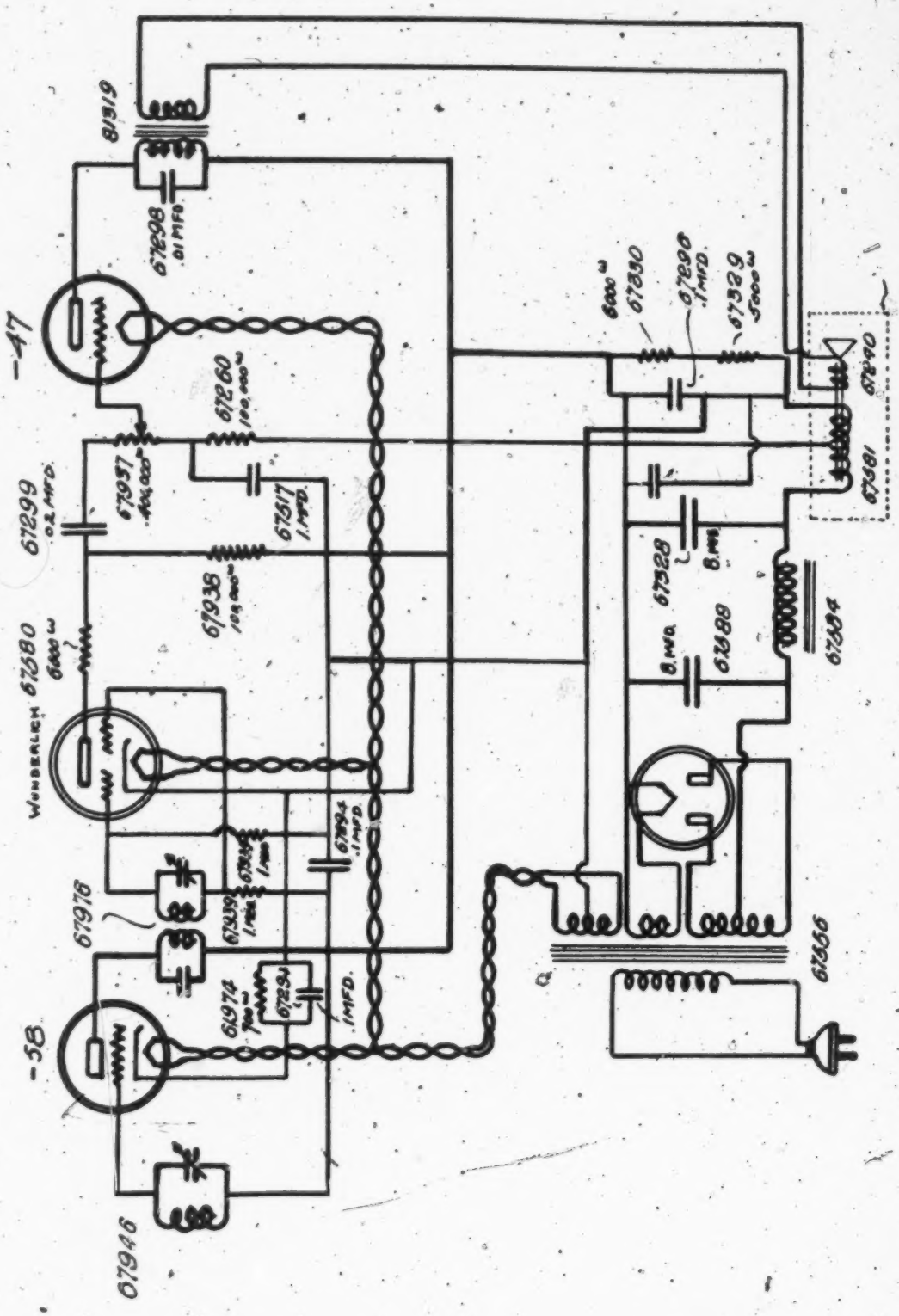

PLAINTIFFS' EXHIBIT No. 77, Sheet 2,
(Simplified colored diagram of circuits of
Defendants' set SW 105)

343-344

~ Stewart-Warner Model 105 ~

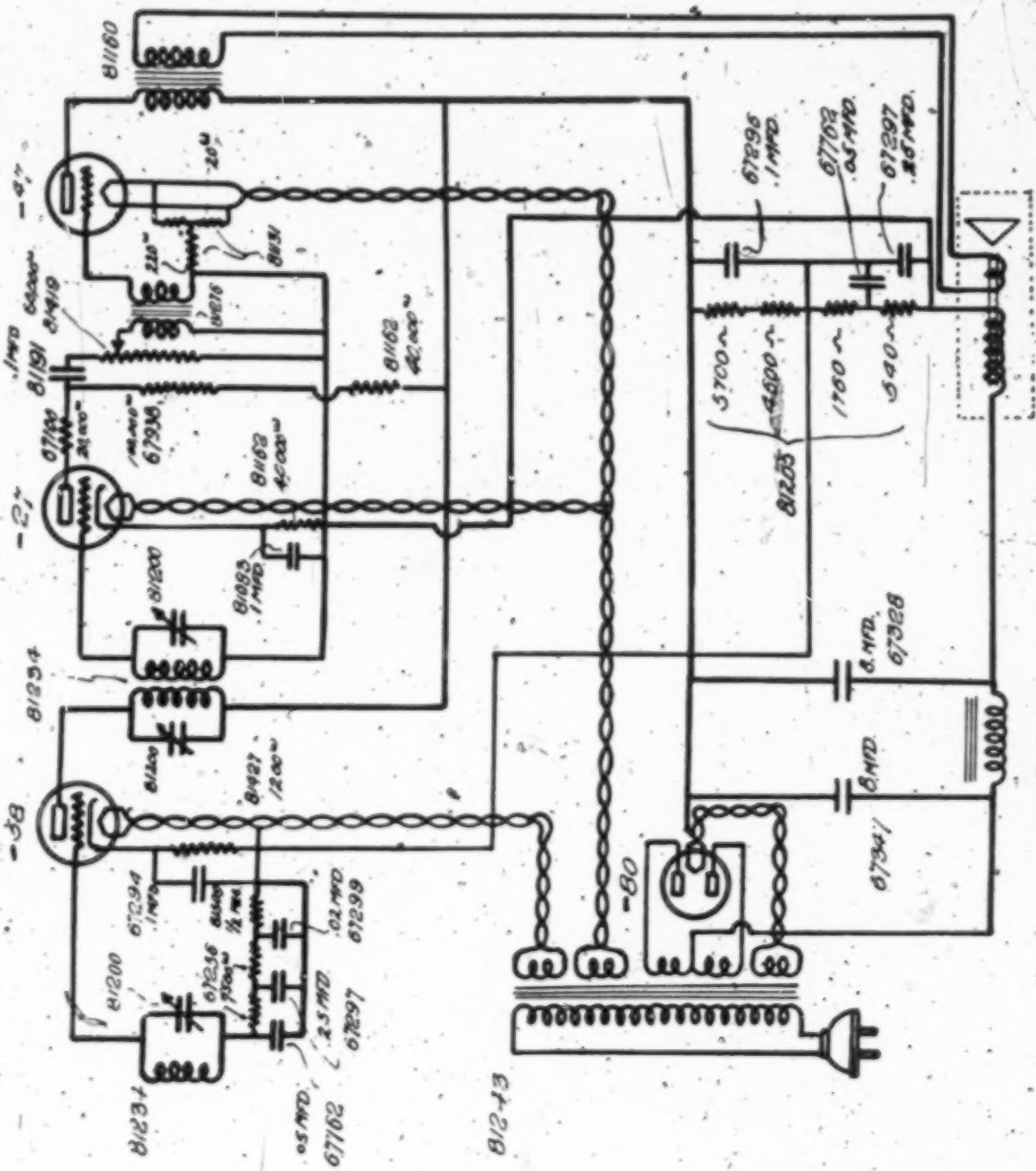

PLAINTIFFS' EXHIBIT No. 77, Sheet 3,
(Simplified colored diagram of circuits of
Defendants' Set SW 105.)

~ Stewart-Warner Model 105 ~

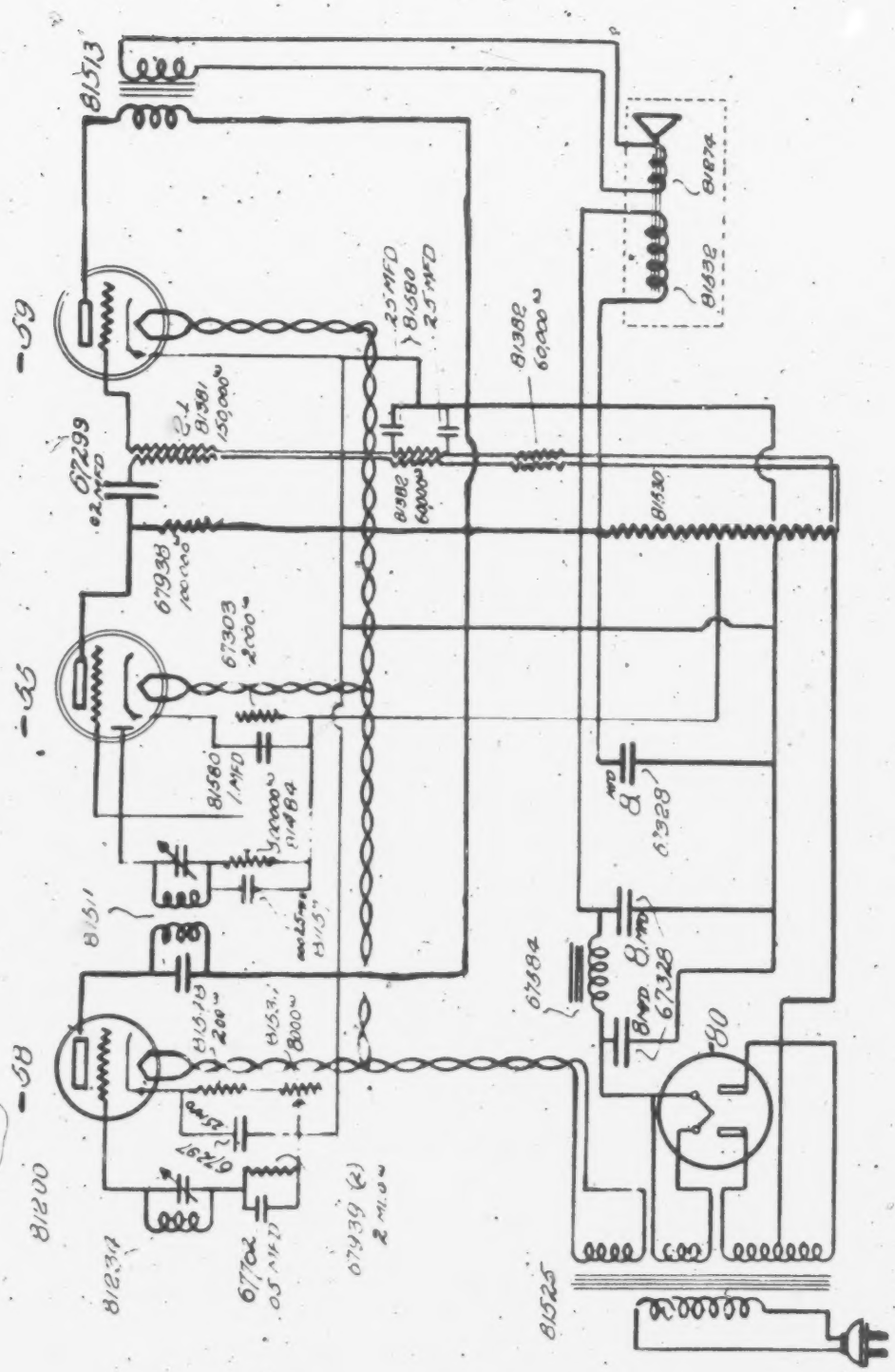

PLAINTIFFS' EXHIBIT No. 77, Sheet 4;
(Simplified colored diagram of circuits of
Defendants' Set SW. 108).

Pltfs X 77

~ Stewart - Warner Model 108 ~

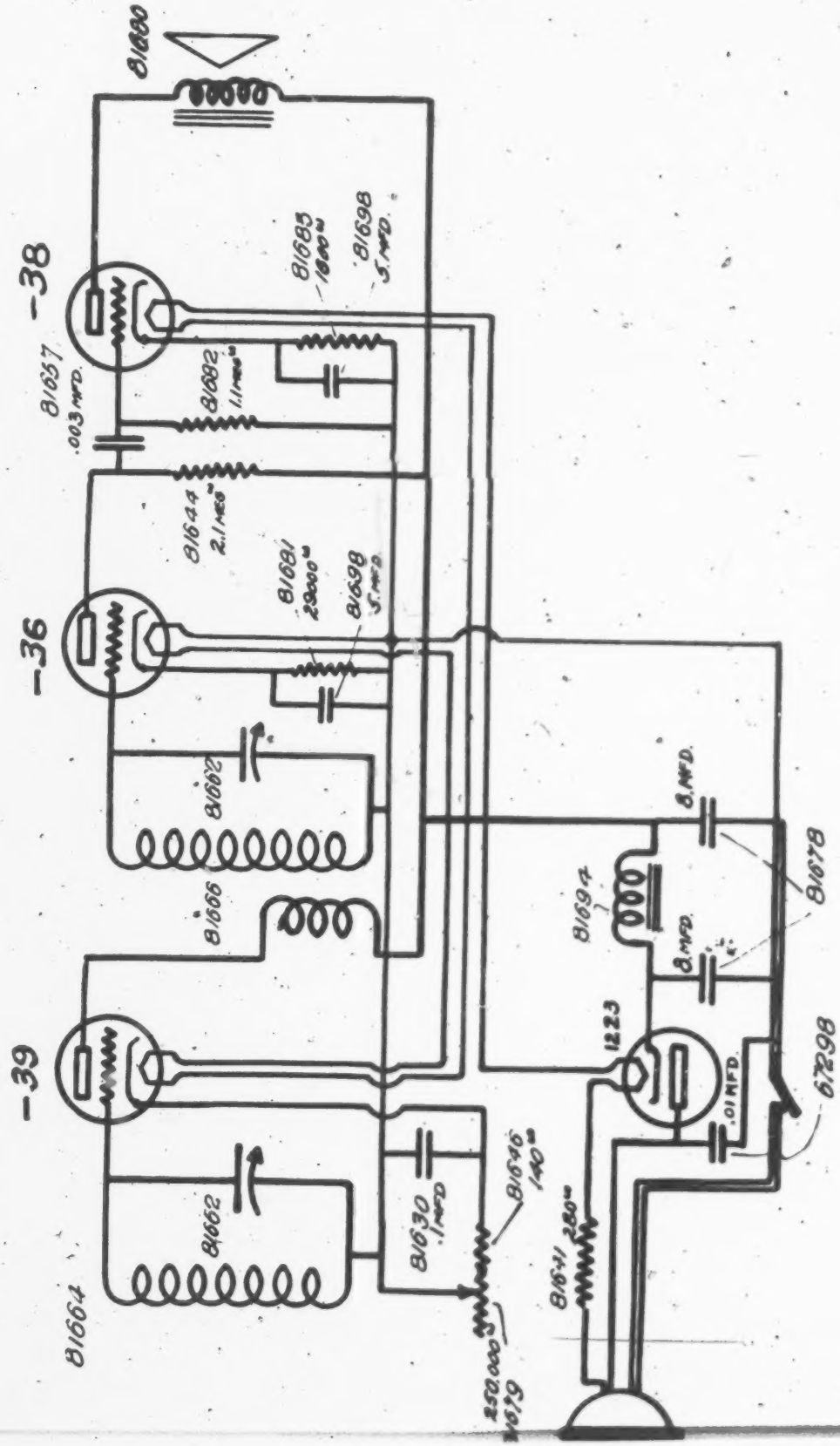

[fols. 349 & 350] PLAINTIFFS' EXHIBIT No. 79

(Filter test diagram SW set 109)

This exhibit was also offered as Plaintiffs' Exhibit No. 109 and will be found at page 536 of this Volume of Exhibits.

STEWART-WARNER MODEL 109 - ARRANGED FOR TEST IN LAST HIGH FREQUENCY CIRCUIT

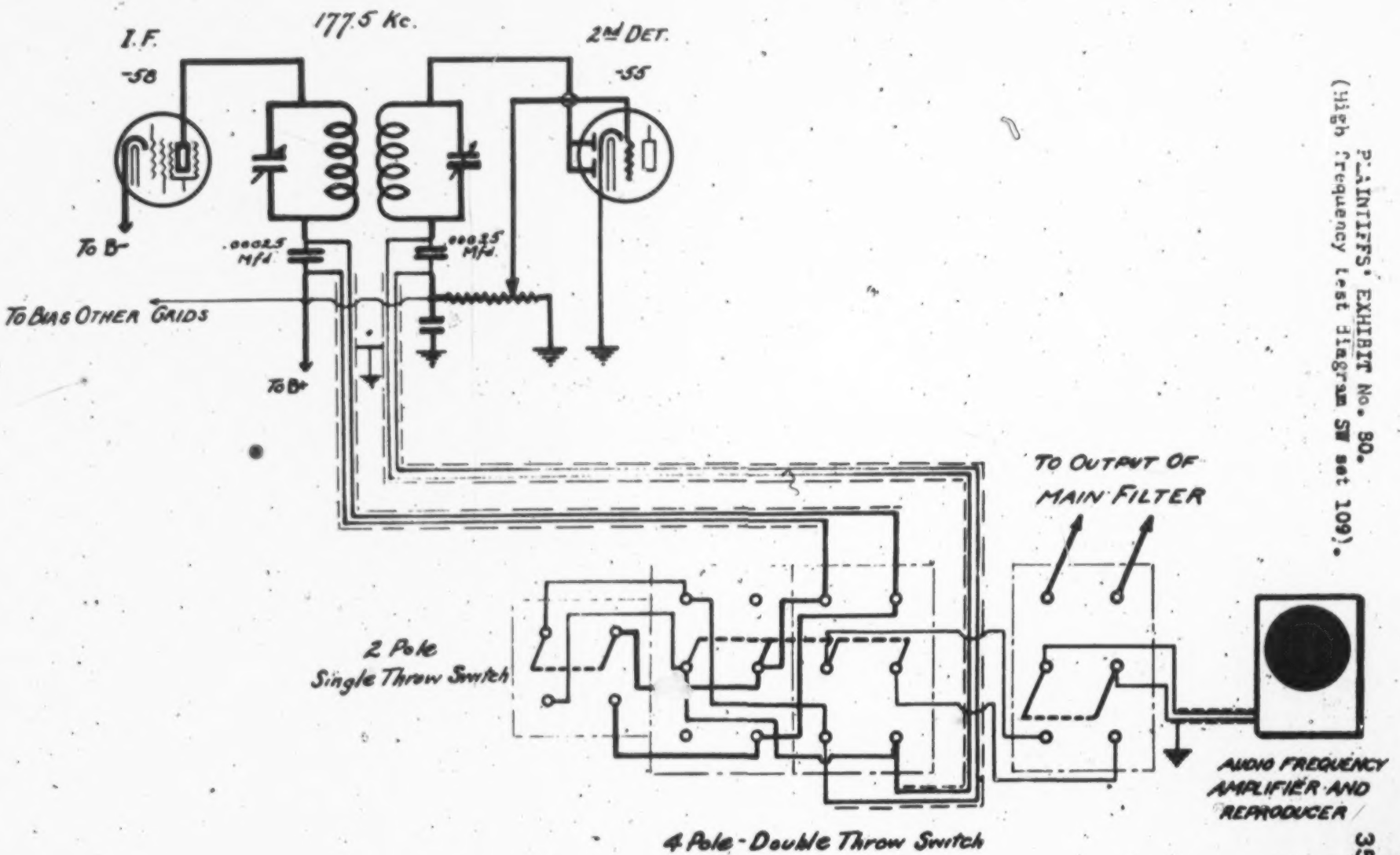

PLAINTIFFS' EXHIBIT No. 80.
(High Frequency Test Diagram SW set 109).

621

AUDIO FREQUENCY AMPLIFIER CIRCUITS IN STEWART-WARNER MODELS

REFER to DUNMORE PATENT 1635117

MODEL 104

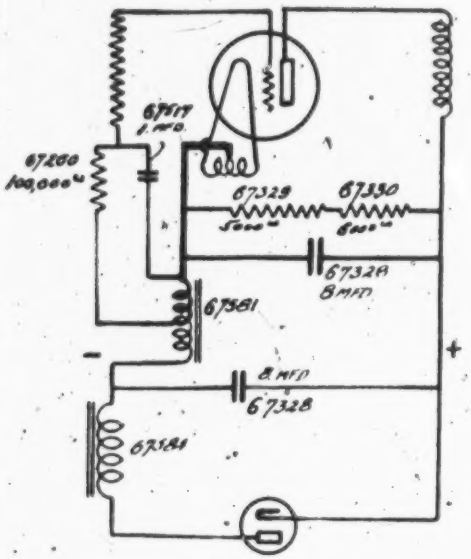

MODEL 105

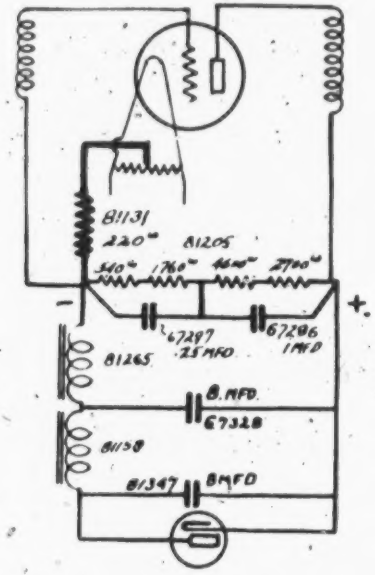

MODEL 106

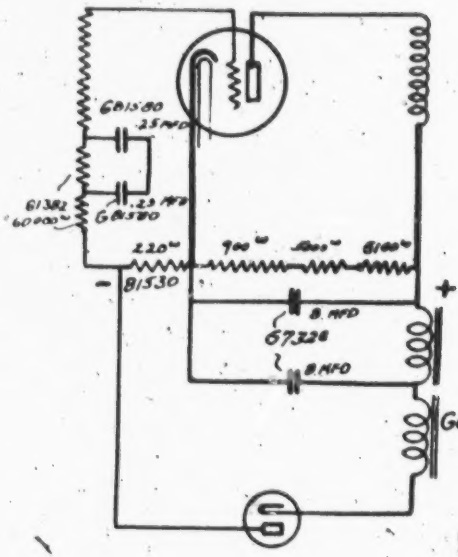

MODEL 108

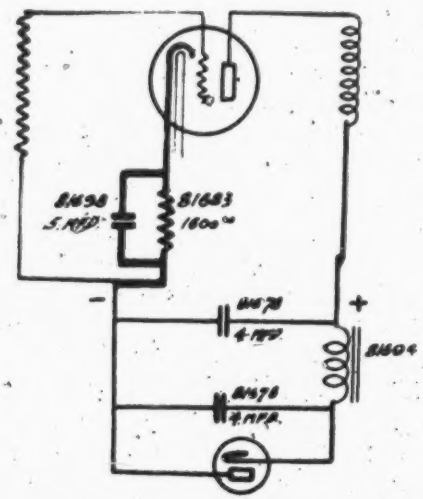

MODEL 109

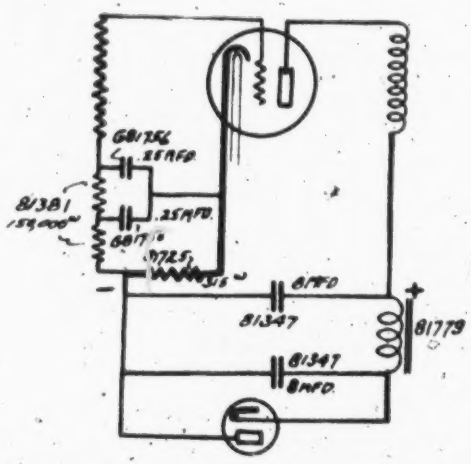

PLAINTIFFS' EXHIBIT No. 81.
(Grid bias diagrams of sets 104, 105, 106, 108 and 109.)

PLAINTIFFS' EXHIBIT No. 84, Sheet 1.
8 Sheets of
(Pencil description of AC amplifier made by Lowell at Arcade Bowling Alleys).

355–356

RADIO RECEIVING AMPLIFIER

(1)

The device here described and illustrated by circuit diagrams is a radio receiving amplifier, wherein both the radio and audio frequencies currents are amplified by means of electron tubes, a crystal detector used as a rectifier, the necessary filament and plate voltages being supplied by the standard 110 volt, 60 cycle lighting power, the residual hum in the telephone receivers being balanced out or neutralized by means of voltage dividers or other devices as will be explained.

Fig. 1 shows an amplifier circuit with two radio frequency stages, a crystal detector and two audio frequency stages. The filaments of all the tubes are connected in parallel and are lighted by A.C. voltage supplied from the secondary winding of the transformer ——→ their brilliancy being controlled by the rheostat —— The primary winding of transformer —— is shown at

RADIO RECEIVING AMPLIFIER

The device here described and illustrated by circuit diagrams is a radio receiving amplifier, wherein both the radio and audio frequencies currents are amplified by means of electron tubes, a crystal detector used as a rectifier, the necessary filament and plate voltages being supplied by the standard 110 volt, 60 cycle lighting power, the residual hum in the telephone receivers being balanced out or neutralized by means of voltage dividers or other devices as will be explained.

Fig. 1 shows an amplifier circuit with two radio frequency stages, a crystal detector and two audio frequency stages. The filaments of all the tubes are connected in parallel and are lighted by A.C. voltage supplied from the secondary windings of the transformer ——, their brilliancy being controlled by the rheostat —. The primary winding of transformer —— is shown at ——, the 110 volt, 60 cycle power being connected to the terminals —— and ——.

(2)

Winding — of transformer — supplies high voltage A.C., which is rectified by the electron tube —, smoothed ~~by condenser —, which is about 4 microfarads capacity, and choke coil —~~, out by choke coil — and condenser —, which is about 4 microfarads capacity. This provides a high voltage direct current which is suitable for the plates of the amplifier tubes. The filament of the rectifier tube — is lighted from winding — of transformer —, the rheostat — ~~serving the double purpose of varying the~~ varies the brilliancy of the rectifier filament, which in turn controls the D.C. voltage output.

The input terminals to the amplifier are shown at — and —, — being connected to the grid of tube — and — being connected to the slider of ~~the~~ balancing resistance — through battery —, which impresses a negative voltage on the

Winding — of transformer — supplies high voltage A.C., which is rectified by the electron tube —, smoothed ~~by condenser —, which is about 4 microfarads capacity, and choke coil —~~ out by choke coil — and condenser —, which is about 4 microfarads capacity. This provides a high voltage direct current which is suitable for the plates of the amplifier tubes. The filament of the rectifier tube — is lighted from winding — of transformer —, the rheostat — ~~serving the double purpose of varying the~~ varies the brilliancy of the rectifier filament, which in turn controls the D.C. voltage output.

The input terminals to the amplifier are shown at — and —, — being connected to the grid of tube — and — being connected to the slider of ~~the~~ balancing resistance — through battery —, which impresses a negative voltage on the grid, making the tube more suitable for amplifying. This balancing resistance is

(3)

about 200 ohms and is connected directly across the [redacted] filament line and serves to keep [redacted] the grid voltage steady with respect to the filament voltage.

The plate circuit of tube — is coupled to the grid circuit of tube — by means of the radio frequency transformer —. There is some variation in the plate current of tube — due to the periodic variation in filament temperature but the resultant audio frequency hum does not pass thru the radio frequency coupling of transformer — and [redacted] does not reach the input of tube —

The secondary of rader transformer — is connected to [redacted] grid of tube — and to slider of balancing resistance — thru battery —, the former keeping the grid voltage steady and the latter impressing a negative charge on the grid in

about 200 ohms and is connected directly across the filament line and serves to keep the grid voltage steady with respect to the filament voltage.

The plate circuit of tube — is coupled to the grid circuit of tube — by means of the radio frequency transformer —. There is some variation in the plate current of tube — due to the periodic variation in filament temperature but the resultant audio frequency hum does not pass thru the radio frequency coupling of transformer — and does not reach the input of tube —

The secondary of radio transformer — is connected to grid of tube — and to slider of balancing resistance — thru battery —, the former keeping the grid voltage steady and the latter impressing a negative charge on the grid in the same manner as in tube —.

(4)

In the plate circuit of tube — is the primary of radio frequency transformer — in the secondary of which is a crystal detector and the primary of audio frequency transformer — shunted with by-pass condenser —. The secondary of this audio transformer is connected to the grid of tube — and to slider of balancing resistance — thru battery — in the same manner as tubes — and —. Another audio frequency stage is added in the same manner and is indicated by transformer — and tube —. The telephone receivers are connected inductively to the plate circuit of tube — by means of transformer — which has a 1 to 1 ratio of winding.

By adjusting the balancing rheostat — the voltage of all the grids are simultaneously kept at a steady value and the battery — provides the proper

negative voltage to all the grids for the best amplification.

Figure 2 shows a modified form of circuit wherein the grid battery — is replaced by the condenser — shunted by a leak resistance. The capacity of this condenser is about .02 microfarads and is inserted in series with the grid circuits of the radio frequency amplifier tubes — and —. With this condenser in the circuit as shown, the grids assume a normal voltage suitable for amplifying while the balancing resistance — neutralizes effect of the A.C. on the filaments. The leak resistance across condenser — any super charge on the grids to leak off to the filaments.

In a similar manner, the grid circuits of the audio frequency amplifier tubes and are connected to the sliders of balancing resistance — through condenser and leak — and to

(6)

~~resistance~~ slider of balancing resistances — thru condenser and leak —. Both condensers — and — are about .02 microfarads capacity.

The ~~purpose~~ of the ~~2~~ condensers

[redacted]

— and — is to allow the grids of tubes — and — to assume a normal voltage suitable for amplifying ~~and~~ while the balancing resistances — and — serve to keep the grid voltages steady with respect to the filaments.

In series with the plate circuits of tubes — and — are condensers — and — of about .02 microfarads capacity shunted by resistances of about 80,000 ohms. The action of these condensers is to partially block the low frequency fluctuations in plate current, caused by the ~~the~~ periodic change in filament temperature, while the higher frequencies

(7)

pass thru more easily. The 80,000 resistances allow the ~~plate~~ high voltage to flow to the plates. On the secondary of the telephone transformer — and in series with the telephone receivers — is shown a condenser — of about .02 microfarads capacity which partially blocks any low frequency hum from flowing into the telephone circuit but which allows the higher frequencies to pass through more easily. The source of filament current and plate voltage is ~~#~~ obtained from transformer — and tube rectifier — in the same manner as described for Fig. 1.

In either of these circuits, instead of the balancing resistance across the filament line, a divided condenser circuit may be provided and a connection taken from the center thereof

PLAINTIFF'S EXHIBIT NO. 84, Sheet 8. 369-370

(2

to the grid circuit, or the
filament current winding on the
transformer — may be tapped
at its electrical center and lead
to the grid circuit

PLAINTIFFS' EXHIBIT No. 85.

371-372

(Photograph of Bureau of Standards AC set with Lowell)

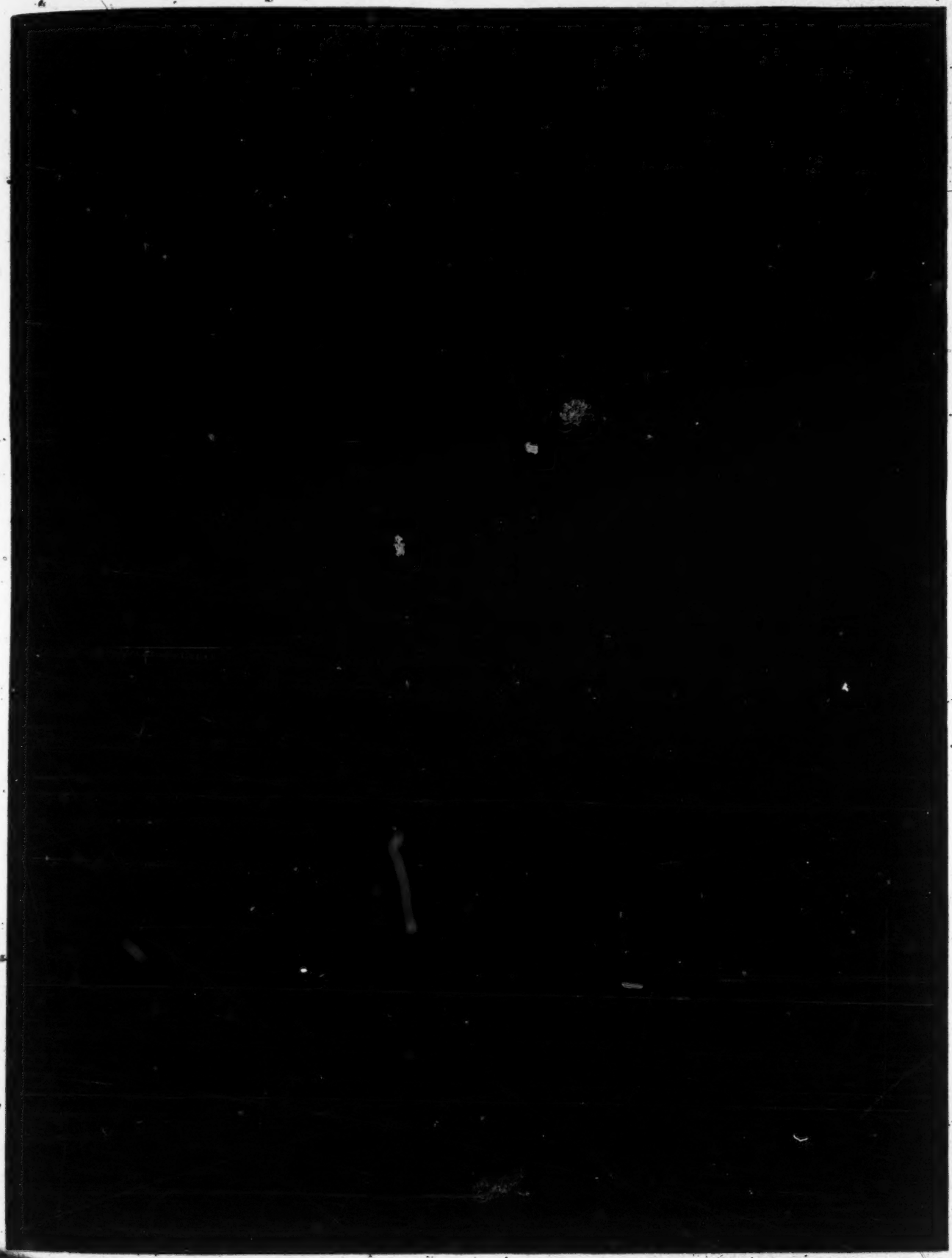

PLAINTIFFS' EXHIBIT No. 90

(Patent 1,606,212 to Dunmore & Lowell)

683 Nov. 9, 1926. 1,606,212

F. W. DUNMORE ET AL

POWER AMPLIFIER

Filed March 21, 1922

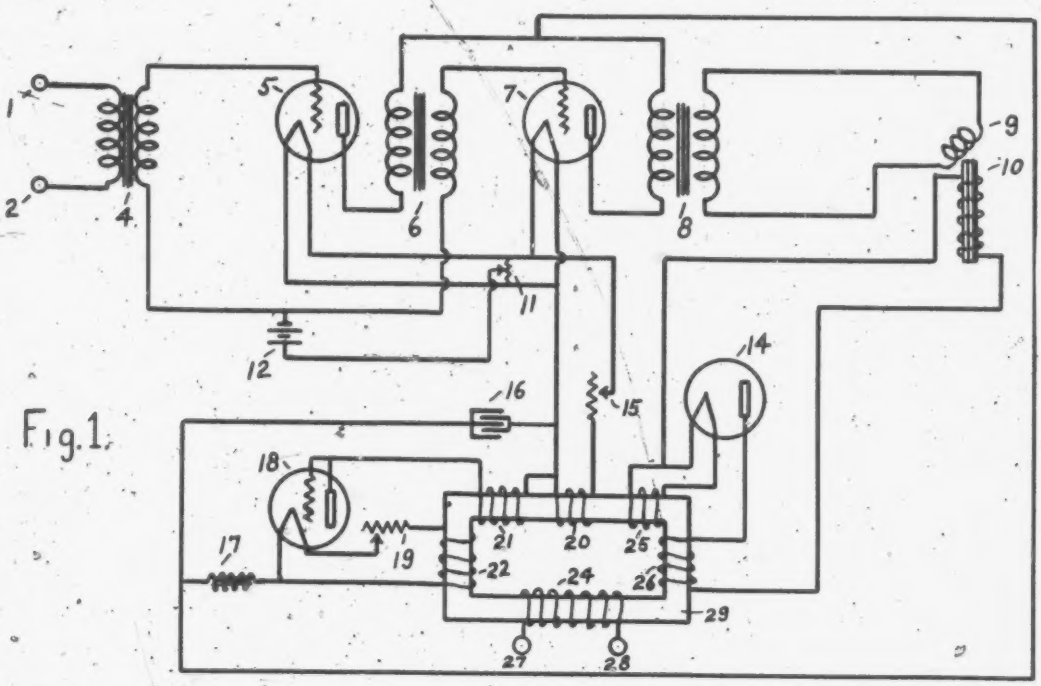

Fig. 1.

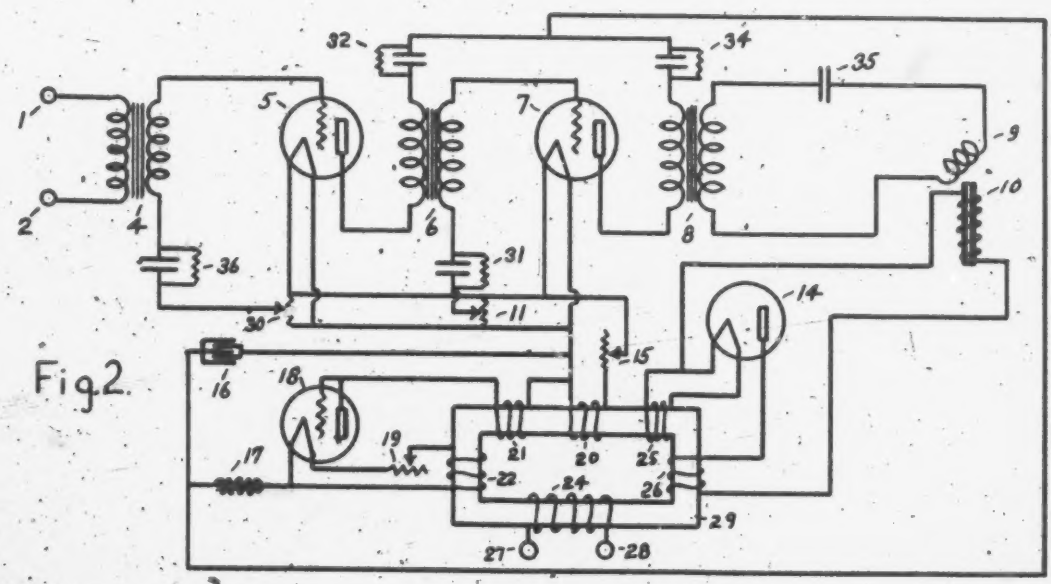

Fig. 2.

Inventor

Francis W. Dunmore.

Percival D. Lowell.

By John B. Brady

Attorney

Patented Nov. 9, 1926. 1,606,212

UNITED STATES PATENT OFFICE.

FRANCIS W. DUNMORE AND PERCIVAL D. LOWELL, OF WASHINGTON, DISTRICT OF COLUMBIA.

POWER AMPLIFIER.

Application filed March 21, 1922. Serial No. 545,493.

Our invention relates to apparatus for the amplification and reproduction of sounds by electrical means and more particularly to an amplifying unit and reproducer of electrical signals.

The object of our invention is to provide an amplifier and reproducer in the form of a readily portable unit.

Another object of our invention is to provide an amplifier of the thermionic vacuum tube type with circuit arrangements for operating the apparatus from the usual source of alternating current residence power supply for energizing the vacuum tube circuits without the use of primary or secondary batteries.

A further object of the invention is to provide a circuit arrangement for a thermionic vacuum tube amplifier employing a loud speaking reproducer in which the loud speaker has its field winding energized from a source of residence lighting power without the use of primary or secondary batteries.

A still further object of the invention is to provide means for eliminating the hum of the low frequency alternating current power supply in the circuits of the thermionic vacuum tube amplifier and reproducer.

Another object of the invention is to provide means for rectifying alternating current and smoothing out the rectified energy to provide a source of power for the circuits of the thermionic vacuum tubes and loud speaking reproducer.

The invention will be more clearly understood by reference to the following specification and accompanying drawings, in which:

Figure 1 is a wiring diagram of the amplifier and electrical reproducer arranged for connection to a source of alternating current power supply with means for eliminating the hum of the alternating current power supply, and Fig. 2 is a modification showing a wiring diagram of the apparatus illustrating means in the thermionic vacuum tube circuits for eliminating the hum of the alternating current power supply.

It will be understood that the principles of our invention may be embodied in various forms and that details are not material. The present embodiment of the invention, therefore, is to be considered as merely indicative. The form illustrated in the drawing and hereinafter described in detail has been found to be one of the practical embodiments and capable of efficient operation and practical in construction.

The apparatus of the present invention comprises a readily portable unit having terminals for the connection of the equipment to any source of electrical variations required to be amplified and electrically reproduced at increased amplitude through a loud speaking telephone. The unit includes a plurality of thermionic vacuum tubes connected in circuit for audio frequency amplification. The loud speaking telephone may be of the type employing a coil armature and electromagnetic field coil. A pair of terminals is provided for the connection of the unit to a source of alternating current power supply as, for example, the usual 110 volt 60 cycle supply. The power is connected to the primary winding of a transformer having proportionate windings thereon for energizing the various circuits of the unit. The filaments of the amplifier tubes are energized from one of these windings. Rectifiers are employed in the unit whereby energy derived from other windings is rectified and supplied as a source of plate circuit potential for the vacuum tube amplifier and as a supply for energizing the field of the loud speaking reproducer. The rectifiers are preferably of the two electrode valve construction and have their filaments energized from other windings on the transformer. Means are provided for biasing the grids of the vacuum tubes comprising the amplifier. Means are also included in the circuits of the amplifier for eliminating the hum from the alternating current power supply and means are included in the equipment for smoothing out the rectified energy supplied to the plate circuits of the amplifier.

Referring to the circuit diagram shown in Figure 1, reference characters 1 and 2 indicate the input terminals of the audio frequency amplifier and lead to the primary winding of the audio frequency transformer 4. The secondary terminals of transformer 4 are connected to the grid of vacuum tube 5 and to the slider of the stabilizing rheostat 11 through battery 12 respectively. The battery 12 connected in series with the slider of rheostat 11 has a potential of about 10 volts so connected that a negative voltage is impressed on the grid of tube 5. The

purpose of stabilizer 11 is to keep the normal voltage of the grid at a steady value with respect to the filament and eliminate the hum of the alternating current supply while the negative voltage from battery 12 holds the grid at its best potential for amplifying purposes. As this battery furnishes grid voltage only, the power drawn from it is negligible. It is therefore of the small flash light battery type and will continue effective for a period equivalent to its normal shelf life. The primary winding of audio frequency transformer 6 is connected in the output or plate circuit of vacuum tube 5. The secondary of audio frequency transformer 6 is connected to the grid of tube 7 and to stabilizer 11, with series grid battery 12, functioning the same as in the first stage.

In the output or plate circuit of tube 7 the primary of the telephone transformer 8 is connected, which has a one to one ratio of winding. This transformer also serves to reduce the hum of the alternating current supply. The secondary of this transformer may be connected to any type of loud speaking reproducer. In the present instance a loud speaker having a field winding may be employed and this secondary winding may lead to the primary winding of a stepdown transformer employed with the loud speaker, the secondary winding of which leads to the armature coil 9 as is usual in this instrument.

29 is a transformer having a primary winding 24 to which the 110 volt, 60 cycle A. C. power is applied at terminals 27 and 28. Winding 22 supplies the filament voltage for the rectifier tube 18, rheostat 19 being in series to regulate its brilliancy. Winding 21 supplies high voltage for the plates of the amplifier tubes 5 and 7, said high voltage being rectified by tube 18 and smoothed out by condenser 16 which is about 4 microfarads capacity, and a choke coil 17. This provides a high voltage direct current which is suitable for the plates of the amplifying tubes.

Winding 20 provides the proper voltage for lighting the filaments of the amplifier tubes 5 and 7, and their brilliancy is controlled by rheostat 15.

Reference numeral 10 represents the electro-magnetic field coil of the loud speaker and is excited by low voltage direct current supplied by the tungar rectifier tube 14. The filament of this tube is lighted from winding 25 of transformer 29 and winding 26 supplies the proper voltage which is rectified by tungar tube 14 and applied to the field winding 10.

In spite of the fact that the sole source of power for this circuit is from the 60 cycle alternating current source, there is practically no resultant hum in the loud speaking telephone due to the reactance offered by the winding 10 and the cooperative effect of this winding with the output circuit of the amplifier system. That is to say the inductance of the field coil 10 is selected of such value and the power amplifier is so connected with the winding 9 that pulsations in the field winding are effectively opposite in phase to the phase of the pulsations in the output circuit of the amplifier so that there is a tendency for the disturbing currents to be neutralized as a result of which the armature remains stationary so far as the effects of disturbing current components are concerned.

A modified form of this circuit is shown in Fig. 2, wherein there is a condenser 36 of about .02 microfarads capacity shunted by a leak resistance of about 2 megohms, in series with the slider of the stabilizer 30 in the grid circuit of tube 5. This condenser serves to keep the normal voltage of the grid at a suitable value for amplifying audio frequency energy impressed at terminals 1 and 2, at the same time acting as a partial block to any existing low frequency hum. The leak resistance prevents the grid from becoming supercharged.

In the plate circuit of tube 5, in series with the primary of the audio frequency transformer 6, is a condenser 32 of about .02 microfarads shunted by a resistance of approximately 80,000 ohms. This condenser serves to partially block the 60 cycle hum, but allows the higher frequencies to pass through. The shunt resistance allows the direct current plate voltage to reach the plate around the condenser, but serves as a block to the low frequency hum.

In series with the secondary of the audio frequency transformer 6 in the grid circuit of tube 7 is a .02 microfarad condenser 31 shunted by a 2 megohm resistance. This condenser and leak 31 function the same as condenser and leak 36 in eliminating any low frequency hum.

A .02 microfarad condenser shunted by an 80,000 ohm resistance 34 is in series with the plate circuit of tube 7 and functions in the same manner as condenser and resistance 32 to eliminate any residual low frequency hum.

Condenser 35 is about .005 microfarads capacity and is in series with the secondary of the telephone transformer 8. It also serves as a partial block to any low frequency hum which may be present. The transformer 29 is arranged with terminals 27 and 28 for connection to the usual source of 110 volt A. C. residence lighting power and includes the several proportionate windings for supplying energy to the circuits of the unit as described in Fig. 1.

In the operation of the apparatus terminals 1 and 2 are connected to any source of audio frequency electrical energy to be am-

plified and reproduced. The terminals 1 and 2 may be connected to the output circuit of a detector tube in a radio receiver. Terminals 27 and 28 are connected through a flexible cord plug with the residence lighting circuit. Rheostat 15 is regulated to secure the proper filament temperature of the amplifier tubes. Rheostat 19 is regulated to secure the proper plate potential for the amplifying tubes. The sliders of rheostats 11 and 30 are adjusted to an electrical midpoint in the resistance, at which point the voltage impressed on the grid of tubes 5 and 7 from the A. C. supply is steady or of very small value. By this adjustment the hum is eliminated from the reproducer circuits. The audio frequency energy variations supplied to terminals 1 and 2 are reproduced at great volume of sound by the reproducer comprising windings 9 and 10.

It will be understood that we are not limited to the use of a reproducer employing a field winding but that any type of reproducer may be employed. The disturbing pulsations which may be present in the winding 9 are of opposite phase by virtue of the phase shifting circuit 8—9, than the phase of disturbing pulsations or currents in the winding 10. The mutual effect therefore is nil as the pulsations tend to be neutralized and have no effect upon the armature.

The entire equipment, including the reproducing horn of the loud speaker, is adapted for mounting within a readily portable cabinet.

Having thus described our invention what we claim and desire to secure by Letters Patent of the United States is as follows:

1. In an apparatus for the reproduction of sound, the combination of a thermionic vacuum tube amplifier circuit, a power source of alternating current, means for rectifying said current, means for supplying the rectified current to said vacuum tube amplifier circuit, a loud speaker reproduced of the electrodynamic type connected to said amplifier, and means for supplying rectified current to said reproducer.

2. In an apparatus for the reproduction of sound, a thermionic vacuum tube amplifier, an input circuit, an output circuit, a power source of alternating current, means for rectifying said current, a loud speaker reproducer connected in said output circuit and comprising an armature winding and a field winding and circuits for supplying said rectified current to said output circuit and to said field winding, said windings being connected in such relation that disturbing current effects in said loud speaker reproducer are substantially eliminated.

3. In an apparatus for the reproduction of sound, a thermionic vacuum tube amplifier, an input circuit and an output circuit, a loud speaker reproducer comprising an armature winding and a field winding, connections between said output circuit and said armature winding, a power source of alternating current, means for rectifying said current and supplying said rectified current to said output circuit and to said field winding, said windings being so connected with said means as to substantially oppose the effect of disturbing currents in said loud speaker reproducer.

4. In an apparatus for the reproduction of sound, a thermionic vacuum tube amplifier, an input circuit, an output circuit, a power source of alternating current, a plurality of means for rectifying said current, filters for smoothing out the rectified current and supplying said rectified current to said output circuit, means in said output circuit for reproducing the signal energy and connections whereby one of said rectifiers supplies energy to said reproducing means, said reproducing means being arranged to substantially neutralize disturbing currents.

5. In an apparatus for the reproduction of sound, a thermionic vacuum tube amplifier, an input circuit, and output circuit, a loud speaker reproducer comprising an armature winding and a field winding, connections between said output circuit and said armature winding, a power source of alternating current, means for rectifying said current, means for smoothing out the rectified current and supplying said current to said output circuit and said field winding with the alternating current components thereof in phase opposition whereby the effect of said alternating current components on said loud speaker reproducer are substantially eliminated.

6. In an apparatus for the reproduction of sound, a thermionic vacuum tube amplifier, an input circuit, an output circuit, a power source of alternating current, means for rectifying said current, filters for reducing the hum of the rectified current, and supplying said rectified current to said output circuit, a loud speaker in said output circuit for reproducing the signal energy and means connected to said loud speaker and associated with said power source for opposing the residual hum of the rectified current.

7. A sound reproducing apparatus comprising in combination an electron tube amplification system including a filament heating circuit, an output circuit, a loud speaker sound reproducer having a pair of windings, one of said windings connected with said output circuit, and connected to a source of alternating current, a device for rectifying a portion of said current for supplying the rectified current to the other of said aforementioned windings, means for deriving

power from said source for energizing said filament heating circuit and said output circuit, said first mentioned winding being connected with said output circuit in such manner that interfering current pulsations occur therein in substantially opposite phase with respect to interfering current pulsations in said second winding for neutralizing the effects of said interfering current pulsations upon said sound reproducing apparatus.

8. An electromagnetic sound reproducing system comprising in combination a power amplifier having circuits arranged to be excited from a power source of alternating current, a loud speaker reproducer including a circuit energized from said power source and a circuit connected with said power amplifier, said last mentioned circuit including a condenser and a transformer having primary and secondary windings with the primary winding connected with said power amplifier and said secondary winding connected with said reproducer and arranged in such manner that alternating current components existent in said circuits occur in substantially opposite phase whereby the effects of said alternating current components on said loud speaker reproducer are substantially neutralized.

9. In a sound reproducing apparatus the combination of an amplifier, a loud speaker having armature and field winding with said armature winding connected to the output of said amplifier, an alterating current supply source, means for deriving power from said source for energizing the circuits of said amplifier, filter circuits for reducing the hum of said alternating current in said apparatus and means for supplying power from said source to said field winding in such manner that the residual hum in said field winding will oppose the residual hum in said armature winding for eliminating the hum of said alternating current in said apparatus.

FRANCIS W. DUNMORE.
PERCIVAL D. LOWELL.

Certificate of Correction.

It is hereby certified that in Letters Patent No. 1,606,212, granted November 9, 1926, upon the application of Francis W. Dunmore and Percival D. Lowell, of Washington, District of Columbia, for an improvement in "Power Amplifiers," errors appear in the printed specification requiring correction as follows: Page 3, line 46, claim 1, for the word "reproduced" read *reproducer*, and line 93, claim 5, for the word "and" read *an;* and that the said Letters Patent should be read with these corrections therein that the same may conform to the record of the case in the Patent Office.

Signed and sealed this 14th day of December, A. D. 1926.

[SEAL.]

M. J. MOORE,
Acting Commissioner of Patents.

STEWART-WARNER MODEL 109 - ARRANGED FOR TEST AT VOICE COIL OF REPRODUCER

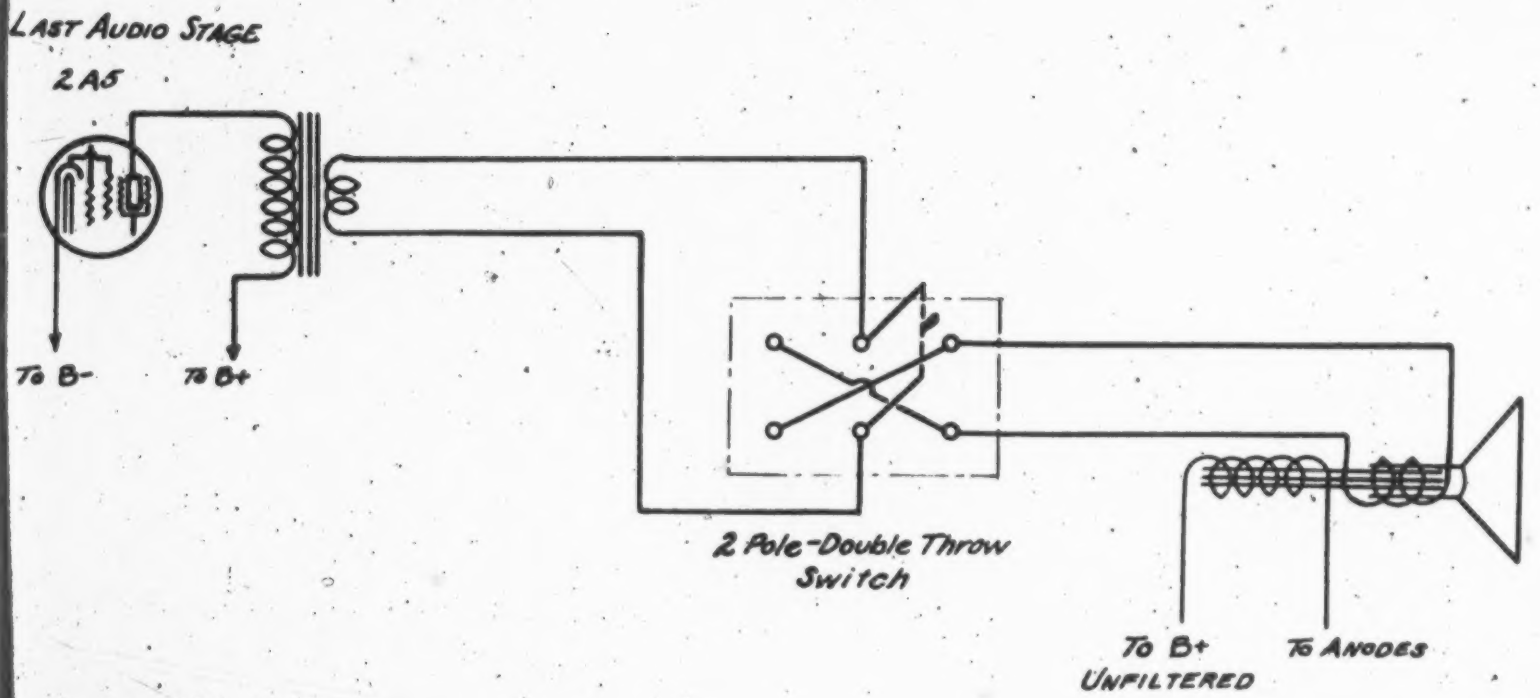

PLAINTIFFS' EXHIBIT No. 92.
(Wiring diagram of test on Defendants' Set SW 109)

[fol. 381] PLAINTIFFS' EXHIBIT No. 93

(Stipulation covering sale of sets by defendants and correctness of wiring diagrams including sets S. W. 104, 105, 106, 108, and 109.)

UNITED STATES DISTRICT COURT, DISTRICT OF MARYLAND

Equity No. 2193

PERCIVAL D. LOWELL, FRANCIS W. DUNMORE and DUBILIER CONDENSER CORPORATION, Plaintiffs,

vs.

A. G. TRIPLETT, R. M. TRIPLETT, A. NELSON, C. M. TRIPLETT, JR., and THE BALTIMORE GASLIGHT COMPANY, Defendants

STIPULATION

It is stipulated that within six years prior to the filing of the bill of complaint herein and both prior to and subsequent to August 6, 1933, the defendant has sold radio broadcast receiving sets embodying the construction described and illustrated in the attached diagrams, descriptions and publications as follows:

Stewart Warner A. C. Model 104 shown in the printed sheet entitled "Circuit Data for Stewart Warner A. C. Series R-104"; blueprint marked I. N. 405; printed pamphlet entitled "Instructions for Stewart Warner Series 40 Radio Receivers".

Stewart Warner Model 105 shown in the printed leaflet entitled "Chassis Model 105 Receiver Models 50 to 59"; blue print marked "I. N. 407" and printed pamphlet entitled "Instructions for Stewart Warner Series 50 Radio Receivers".

Stewart Warner Model 106 shown in printed leaflet marked "Circuit Data for Stewart Warner A. C. Series [fol. 382] R-106"; blueprint I. N. 404; blueprint marked I. N. 422; printed leaflet entitled "Stewart Warner Series 60".

Stewart Warner Model 108 shown in printed leaflet entitled "Circuit Data for Stewart Warner Chassis Series 108 and 108.X"; blueprint I. N. 426; printed leaflets entitled "Stewart Warner Chassis Model 108 Instructions", "Stewart Warner Chassis Model 108 Instructions".

Stewart Warner Model 109 shown in printed leaflet entialed "Chassis Model 109, Receiver Models 1090 to 1099"; blueprint I. N. 427; leaflet entitled "Stewart Warner Chassis Model 109 Instructions".

C. V. Edwards, Counsel for Plaintiffs. Samuel E. Darby, Jr., Counsel for Defendants.

Dated June 5, 1934.

PLAINTIFFS' EXHIBIT NO. 92, Sheet 2.
Circuit Data for Stewart-Warner A.C. Series R-104

691
383—384

Circuit Data for Stewart-Warner A. C. Series R-104

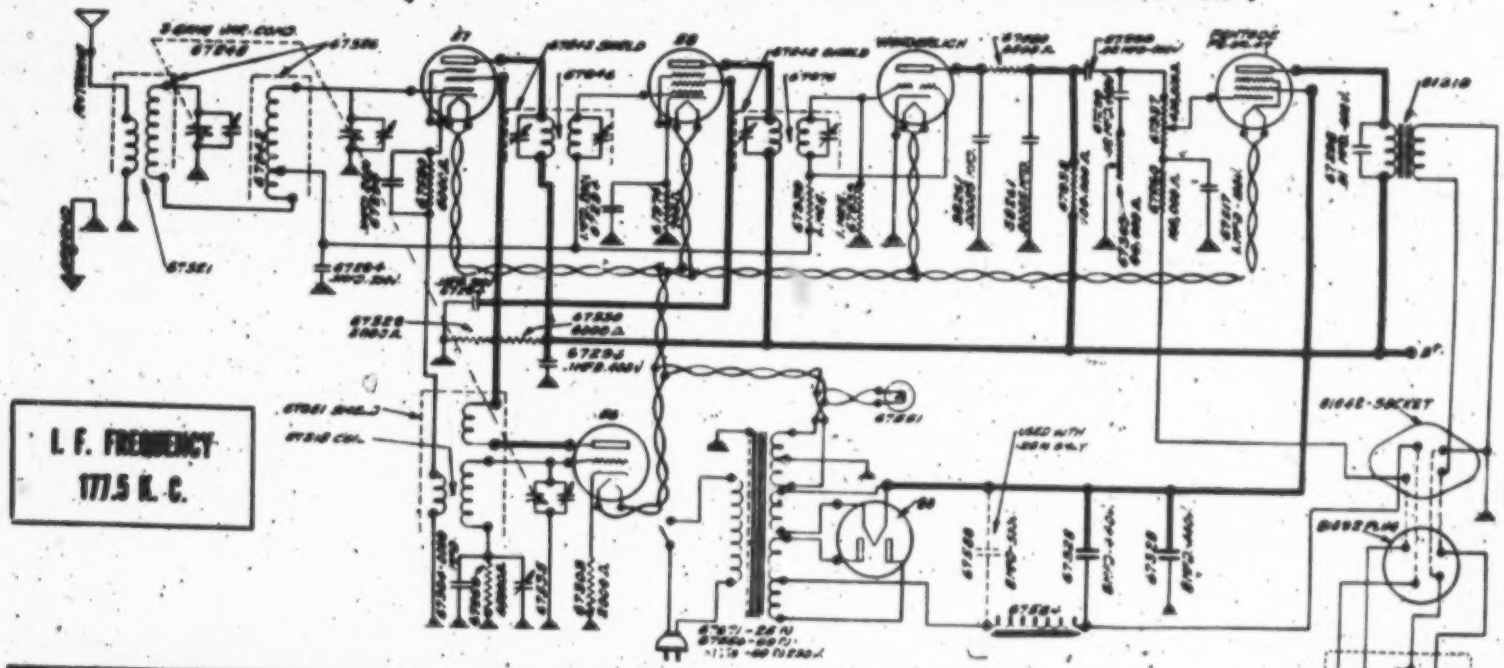

LINE VOLTAGE 115 **VOLTAGE TABLE** VOLUME CONTROL FULL ON

Type of Tube	Tube Circuit	Filament Voltage	Plate Voltage	Screen Grid Voltage	Bias Voltage
'57	1st Det.	2.57	256	100	4.5
'56	Osc.	2.57	100		7.8
'58	I. F.	2.56	256	100	3.9
Wunderlich	2nd Det.	2.56	37		
P. Z. or '47	Output	2.56	239	256	15.75 ‡
'80	Rect.	4.9			

All D. C. voltages measured with respect to ground, using high resistance voltmeter of 1000 ohms per volt. Readings will vary, depending upon voltage range of meter, being higher for higher range instruments. This variation is most marked for second detector plate voltages.

‡This reading obtained between ground and that prong of speaker socket situated furthest from other three. Direct reading from grid to ground or reading taken with a set tester will show about 3 volts because of high resistance in grid circuit.

Form 5623 Printed in U. S. A.

FRONT OF SET

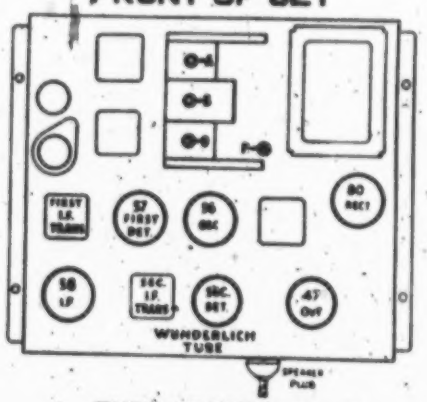

TUBE LOCATIONS

6
9
2

SERVICE DATA ON MODEL 104, CHASSIS

CIRCUIT DESCRIPTION OF 104 CHASSIS

The Model 104 Stewart-Warner Radio Chassis makes use of a six-tube superheterodyne circuit embodying automatic volume control (A.V.C.) thru the action of its Wunderlich-type detector tube. An incoming signal is tuned first by a pre-selector circuit to increase selectivity and reduce image frequency interference and then fed into a tuned first detector stage, where it beats with the output of a local oscillator to produce a 177.5 K. C. intermediate frequency signal. This odd frequency is chosen to reduce further any image frequency interference. The I.F. signal is amplified in an exceptionally high gain stage and then fed into the Wunderlich tube which performs the triple functions of detection, amplification, and automatic volume control. As a result of the A.V.C. action of this tube a voltage varying in value in direct relationship to the strength of the incoming signal, appears across the 1 megohm resistor connected between one of its grids and ground. This resistor is also in the grid return circuit of both the first detector and I.F. tubes, so that their biases increase in direct relationship to the strength of the incoming signal. This action results in an automatic control of sensitivity.

The plate circuit audio output of the detector tube is impressed across the 400,000 ohm variable resistor in the grid circuit of the pentode tube. Volume is controlled by using this variable resistor as a voltage divider to feed any desired audio voltage from zero to the maximum available across the pentode grid circuit.

ALIGNING THE 104 CHASSIS

Alignment can be carried out intelligently only if the service man knows the general layout of the set, and how each circuit is affected during the process of alignment. The simplified top view of the chassis appearing on the other side of this sheet gives the layout of the receiver and indicates the names and locations of the various aligning adjustments. The following brief discussion of what actually happens during alignment should be carefully read, using the sketch as a basis before commencing the actual work.

LOCATION AND FUNCTION OF ALIGNING ADJUSTMENTS

The incoming signal is tuned first by the pre-selector "A" stage and then fed into the first detector "B" circuit, where it is tuned again to improve selectivity. These circuits are brought into exact alignment by the two trimmer condensers "A" and "B," pointed out in the attached sketch. The tuned oscillator circuit is so designed that it tunes to a frequency exactly 177.5 K.C. higher than the incoming signal. This circuit is kept in exact step by means of two adjustments, the oscillator condenser trimmer "O," and the padding condenser "P," which can be reached thru a small hole in the chassis base just in front of the "O" condenser.

THE "O" TRIMMER IS MAINLY EFFECTIVE AT THE HIGH FREQUENCY END OF THE DIAL, AND THE PADDING CONDENSER "P" AT THE LOW FREQUENCY END. The alignment routine which will be outlined takes this into consideration.

The two intermediate frequency (I. F.) transformers are of the tuned input,—tuned output type and each winding is tuned by a separate trimmer condenser, making a total of four additional adjustments. The first I. F. transformer is in the steel shield at the right side of the set, while the second I. F. transformer is at the rear of the chassis. The I. F. trimmer adjusting screws can easily be reached thru two small holes at the base of each shield, the primary circuit adjustment in each case being at the left and the secondary adjustment at the right.

PRELIMINARY STEPS IN ALIGNING

In aligning the Model 101 it is essential to use a high grade oscillator and sensitive output meter. The R. F. signal fed into the receiver must be very weak or it will cause the A. V. C. circuit to function, making correct alignment impossible. The output meter must be sufficiently sensitive to give a satisfactory reading with this low signal.

Before starting the alignment procedure see that the volume control is full on, and the output meter connected either between the pentode plate and ground thru a .25 mfd condenser or across the voice coil, depending upon its sensitivity.

ALIGNING PROCEDURE

With this preliminary discussion clearly in mind, the actual alignment can be started. The following step-by-step routine should be followed for satisfactory results.

1. Remove the grid clip leading from the variable condenser to the cap of the first detector tube.
2. Set up the oscillator, and tune it to exactly 177.5 K.C. (This frequency can be accurately determined by tuning in a station at either 710 or 1420 K.C. and beating the 4th or 8th harmonic of the oscillator 177.5 K.C. signal against it. To be sure that you have the harmonic of the 177.5 K.C. signal, instead of some other frequency, tune in the other 177.5 harmonics on the broadcast dial. These should come in 177.5 K.C. on either side of the original setting. Do not use the oscillator calibration curve to determine this intermediate frequency.) Connect the oscillator output between the grid cap and grid clip of the first detector tube.
3. Adjust the oscillator output to give about one-half full scale deflection of the output meter.

Adjusting the I. F. Circuits

1. Adjust all four I. F. trimmer condensers, in each case tuning carefully to make sure that maximum deflection is obtained on the output meter.

IT IS VERY IMPORTANT THAT ABSOLUTELY NO INWARD PRESSURE BE APPLIED TO THE ALIGNMENT TOOL, OR THE CONDENSER MAY SPRING BACK TO A DIFFERENT SETTING AS SOON AS THE TOOL IS REMOVED.

2. Go back and repeat all four adjustments since the adjustment of each I. F. trimmer affects the others to a certain extent, thus necessitating readjustment.

Adjusting R. F. and Oscillator Circuits

1. Replace the grid cap on the first detector tube.
2. Twist the aerial and ground wires of the set together to reduce noise pick-up. Connect the aerial wire to the output of the oscillator and ground both set and oscillator. Adjust the oscillator frequency to 1400 K.C. and carefully tune the receiver to give maximum output. Adjust the oscillator output to produce about one-half full scale deflection of the output meter.
3. Carefully tune the "A" trimmer till the output meter reading reaches a maximum.
4. Note the wire leading from the grid cap of the 57 first detector tube (see tube layout diagram on the reverse side of this sheet), to the tuning condenser. The section of the condenser gang to which this lead is soldered is the "B" section. Altho this "B" section is shown as the center condenser section on the diagram, some sets were manufactured with the "B" section in the rear.

Retune the set and adjust the "B" trimmer for maximum output. The third, or "O" trimmer should not be touched unless the set is badly out of calibration at the high frequency end of the dial.

5. Set the oscillator at 600 K.C. and tune the set carefully to this frequency.
6. Adjust the oscillator padding condenser "P" for maximum output, RETUNING THE SET AFTER EACH CHANGE IN ADJUSTMENT. This is important.
7. Turn back the oscillator to 1400 K.C., tune the set to the same frequency, and very carefully readjust the "A" and "B" trimmer condensers to produce maximum output.

The receiver should now be perfectly aligned.

104 PARTS LIST

Part No.	Description	List Price
38261	.00025 mfd. condenser	$0.35
67210	Speaker diaphragm and voice coil assembly	1.85
67212	I.F. coil shield	.25
67218	Main tuning condenser	3.50
67239	15000 ohm, ½ watt resistor	.25
67260	100,000 ohm, ½ watt resistor	.25
67291	.1 mfd. 200 volt condenser	.30
67296	.1 mfd. 400 volt condenser	.40
67298	.01 mfd. 600 volt condenser	.30
67299	.02 mfd. 400 volt condenser	.30
67303	2000 ohm, ½ watt resistor	.25
67304	.0009 mfd. padding condenser	.30
67309	60,000 ohm tone control	1.50
67318	Oscillator tuning coil	1.25
67321	"A" tuning coil	1.00
67326	R.F. coil shield	.50
67328	8 mfd. 150 volt electrolytic condenser	1.75
67329	3000 ohm vitreous resistor	.30
67330	6000 ohm vitreous resistor	.30
67517	1. mfd. 400 volt condenser	.75
67335	Oscillator pad trimmer condenser	.45
67351	2.5 volt pilot light	.25
67356	175 volt 60 cycle power transformer	3.50
67380	6000 ohm, ½ watt resistor	.25
67381	Speaker field coil	3.50
67384	Filter choke coil	2.00
67388	8 mfd. 300 volt electrolytic condenser	1.85
67671	115 volt 25 cycle power transformer	8.00
67937	400,000 ohm volume control	.95
67938	100,000 ohm, 1 watt resistor	.25
67939	1 megohm, ½ watt resistor	.25
67942	"B" tuning coil	.75

Part No.	Description	List Price
67944	1st I.F. transformer	2.00
67946	67181 coil only	.75
	67336 trimmer only	.65
67951	Oscillator coil shield	.75
67974	700 ohm, 1 watt resistor	.25
67976	2nd I.F. transformer	2.00
	67181 coil only	.75
	67336 trimmer only	.65
81042	Speaker socket	.20
81092	81092 Speaker plug only	.20
	67972 Cable and plug	.60
	67971 Cable only	.40
81139	230 volt 60 cycle power transformer	10.00

PARTS NOT SHOWN ON DIAGRAM

67332	Rubber dial drive bushing	.02
67953	Escutcheon plate	.50
81112	Volume or tone control knob	.25
81113	Tuning knob	.25

DEC 12 1933

IN-405

'PLAINTIFFS' EXHIBIT No. 93, Sheet 4.

REVISIONS

NO.	DATE	BY

5 GANG VARI. COND.

ANTENNA

GROUND

'37

'58

'58

WUNDERLICH

PENTODE PZ '47

SPEAKER SOCKET

B+

C.S.I. LAMP 67351

POWER SUPPLY

SWITCH

FOR E

POWER SUPPLY.

SWITCH

FOR A & B

SPEAKER PLUG

SPEAKER CABLE.

ELECTRO DYNAMIC SPEAKER.

NOTE.- THIS CIRCUIT IS FOR MODELS R-104 A, B & E ON TA.2476

(1)	67298	.1 MFD. 200 V.
	67294	1 MFD 200 V.
(2)	67294	.1 MFD 200 V.
(4)	67294	.1 MFD. 200 V
(5)	67296	1 MFD. 400 V.
(6)	67298	.01 MFD. 400 V.
(7)	67299	.05 MFD 400 V.
(9)	67299	.02 MFD 400 V.
(10)	67513	1. MFD. 100 V.
(11)	67328	8 MFD 440 V.
(12)	67324	8 MFD 440 V.
(13)		... MFD ... V.
(14) (15)	67248	TUNING CONDENSER.
(16)	67304	.0009 MFD.
(17)	67336	TRIMMER COND.
(18)	58261	.00025 MFD.
(19)	58261	.00025 MFD.
		OR 41157

(20)	67580	6000 ohm ½ WATT
(21)	67303	2000 ohm ½ WATT
(22)	67981	400 ohm 1 WATT.
(23)	67330	6000 ohm
(24)	67329	5000 ohm
(25)	67334	1 MEG. ½ WATT.
(26)	67339	1 MEG. ½ WATT.
(27)	67338	100 000 ohm 1 WATT.
(28)	67340	100 000 ohm ½ WATT.
(29)	67309	60 000 ohm TONE CONTROL
(30)	67337	400000 ohm VOLUME CONTROL
(31)	67259	45 000 ohm ¼ WATT.
(32)	67 [illegible]	6000 ohm ½ WATT

(41)	67321	A COIL (PRE-SELECTOR)
(42)	6794	B COIL (1ST DETECTOR)
(43)	.1318	OSCILLATOR COIL
(44)	67946	1ST I.F. TRANS ASSEM.
(45)	67976	2ND I.F. TRANS ASSEM.
(46)	67654	OUTPUT TRANS.
(46)	67384	POWER SUPPLY FILTER CHOKE.
(47)	67556	POWER TRANS. ASSEM. 60 [illegible] 115
	67671	" " " " 115
	[illegible]	" " " " 200V, 385 I. 5 EFOV.

100V. BLK. YEL. GRN. BLK. RED. YEL. RED. PRI. #1 PRI. #2 GRN. RED.

230V. BLK. YEL. GRN. BLK. RED. YEL. RED. PRI. #1 PRI. #2 GRN. RED.

225V. BLK. YEL. GRN. BLK. RED. YEL. RED. PRI. #1 PRI. #2 GRN. RED.

250V. BLK. YEL. GRN. BLK. RED. YEL. RED. PRI. #1 PRI. #2 GRN. RED.

POWER TRANS PRIMARY CONNECTIONS (CIRCUIT FOR 10E & MODEL)

CAUTION

CIRCUIT DIAGRAM

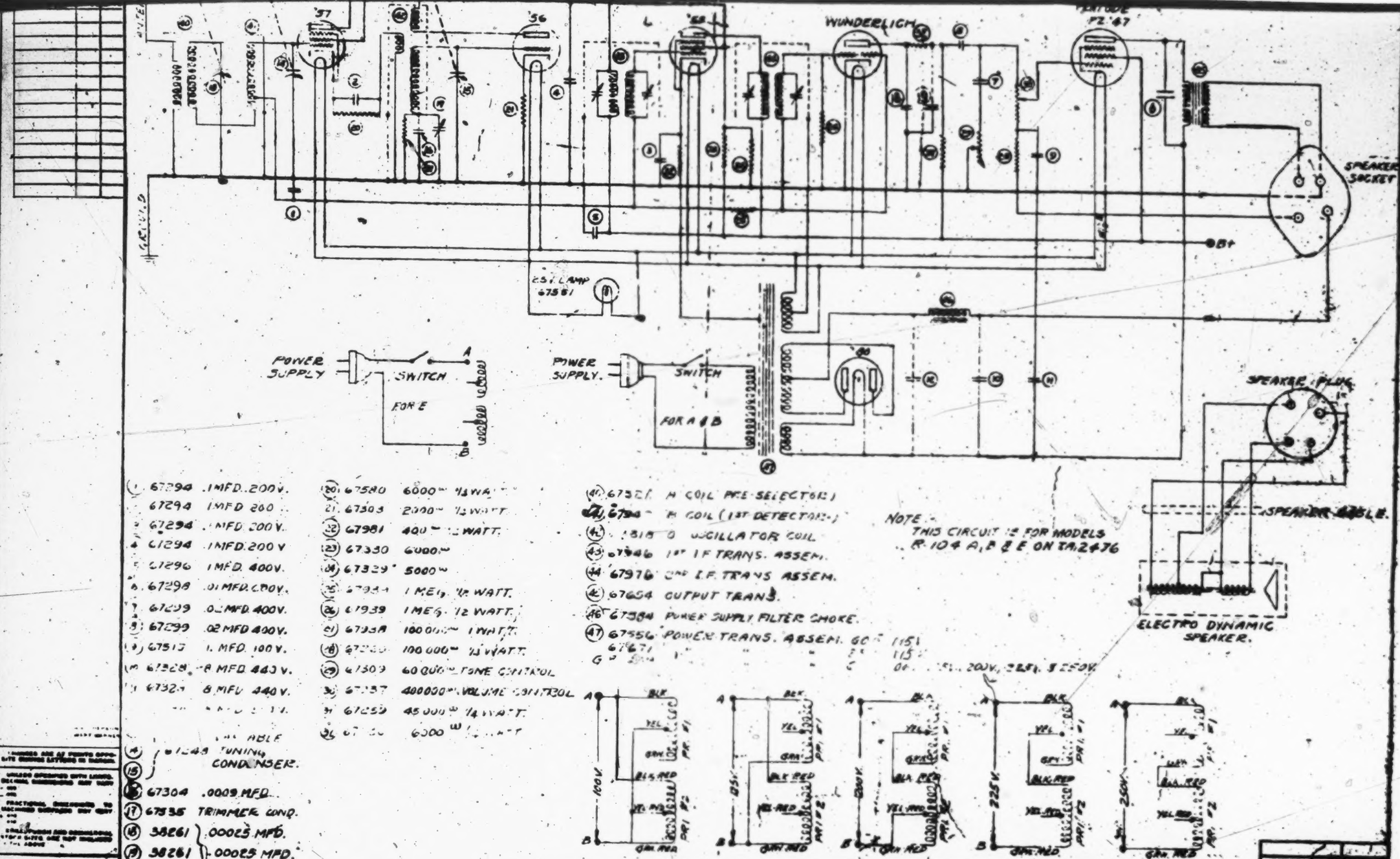

(1)	67294	.1MFD. 200V.
	67294	1MFD 200
	67294	.1MFD. 200V.
4	67294	.1MFD. 200V
5	67296	1MFD. 400V.
6	67298	.01MFD. 600V.
7	67299	.02MFD. 400V.
8	67299	.02MFD 400V.
9	67513	1. MFD. 100V.
10	67328	8 MFD. 440V.
11	67324	8 MFD. 440V.
		[illegible]
(14) (15)	67248	VARIABLE TUNING CONDENSER.
(16)	67304	.0009 MFD.
(17)	67535	TRIMMER COND.
(18)	38261	.00025 MFD.
(19)	38261	.00025 MFD. OR 81157

(20)	67580	6000Ω 1/2 WATT
21	67303	2000Ω 1/2 WATT
(22)	67981	400Ω 1/2 WATT.
(23)	67330	6000Ω
(24)	67329	5000Ω
(25)	67934	1 MEG. 1/2 WATT.
(26)	67939	1 MEG. 1/2 WATT.
(27)	67938	100 000Ω 1 WATT.
(28)	67[illegible]	100 000Ω 1/2 WATT.
(29)	67309	60 000Ω TONE CONTROL
(30)	67[illegible]37	400000Ω VOLUME CONTROL
(31)	67259	45 000Ω 1/4 WATT.
(32)	67[illegible]	6000Ω 1/2 WATT

(40)	67321	A COIL PRE-SELECTOR)
(41)	6794[illegible]	B COIL (1ST DETECTOR)
(42)	[illegible]818	C OSCILLATOR COIL
(43)	67946	1ST I.F. TRANS. ASSEM.
(44)	67976	2ND I.F. TRANS ASSEM.
(45)	67654	OUTPUT TRANS.
(46)	67384	POWER SUPPLY FILTER CHOKE.
(47)	67556	POWER TRANS. ASSEM. 60 [illegible] 115V
	67671	[illegible] 115V
G	[illegible]	[illegible] 200V, 225V, & 250V.

NOTE:- THIS CIRCUIT IS FOR MODELS R-104 A, B & E ON TA 2476

POWER TRANS PRIMARY CONNECTIONS (CIRCUIT FOR 104 & MODEL)

CAUTION

SIZE OF SHEET "48"

CIRCUIT DIAGRAM

DATE ISSUED 5-9-52

DRAWN BY L.W.H.

TRACED BY L.W.H.

IN-405

STEWART-WARNER CORPORATION, CHICAGO, U.S.A.

PLAINTIFFS' EXHIBIT No. 93, Sheet 5, 389- 390

INSTRUCTIONS

for

STEWART-WARNER SERIES 40 RADIO RECEIVERS

(Chassis 104-A, B and E.)

IMPORTANT!

YOUR Stewart-Warner Radio Receiver is not guaranteed unless you have filled in and mailed the warranty card accompanying each set within ten days after the purchase of the set. Be sure and ask your dealer for this card if it does not accompany the set.

STEWART-WARNER CORPORATION

CHICAGO, ILL., U. S. A.

INSTRUCTIONS

for

STEWART-WARNER SERIES 40 RADIO RECEIVERS

(CHASSIS 104-A, B. and E)

FACTS YOU SHOULD KNOW CONCERNING RADIO RECEPTION

Your Stewart-Warner radio receiver with its extreme sensitivity and its marvelous realism of tone can be a source of untold enjoyment to you. It opens up a vast field of entertainment and genuine knowledge that would otherwise be beyond your reach. Music by the world's greatest artists, entertainment of the most varied type, word pictures of interesting events of history as they are being enacted while you listen, talks by our most famous men, embracing the entire field of human endeavor—in fact, there are no limits to the entertainment your radio can provide.

However, to avail yourself of these benefits in the fullest measure, it is necessary that you be familiar with a few important facts governing radio reception.

The radio waves that actuate your receiver are so intangible in form and so infinitesimal in power, yet travel at such terrific speeds that it is almost impossible for the human mind to conceive of them. They cannot be felt, seen, heard or tasted; they travel at a speed which would carry them seven and one-half times around the world in a second, they are measured in fractions of a fly power, if such a unit can be said to exist, and yet so sensitive is your Stewart-Warner radio receiver that it reproduces their minutest variations in the form of sound with perfect accuracy.

Under certain conditions the forces of nature tend to modify and restrict these radio waves after they leave the broadcast station, thus affecting the reproduction of the program. At times we have the phenomenon known as static; we have periods of maximum and minimum reception, fading of signals, and other peculiarities of radio reception for which the radio receiver is not responsible and cannot entirely compensate. We list a few of these to give you some idea of what to expect from your Stewart-Warner radio receiver.

DISTANT STATIONS

Reception from distant stations depends on a number of factors, such as local conditions, season of the year, time of day, the aerial used, and the power of the broadcasting station. As a general rule, distant reception is at its best during the winter months. Nighttime reception is always far better than daytime reception. On an occasional exceptionally favorable night some stations may come rolling in with local volume and

PLAINTIFF'S EXHIBIT NO. 93, Sheet 6.
391-392
69

...e picked up again. On other nights distant stations from one direction ... unusually loud, and closer, more powerful, stations in other directions be ... Quite often there may seem to be a perfect blanket that kills all distant ... There is no telling beforehand how reception may be affected—actually it ...y minute.

...ception of distant stations, particularly in the summer months, is accom- ...more or less crackling or frying noises known as static. Although such noise ...e, not at all noticeable during the reception of a local broadcast program, it ...e quite troublesome on distant stations. Fortunately static is very largely ...to the higher notes so that if the tone control of the Stewart-Warner Radio ...s turned toward the right to produce a deeper tone, the noise will be greatly ... that the static-distorted program can be enjoyed without excessive inter- ...This is an important point to bear in mind.

FADING

...waves coming in from distant stations will occasionally decrease in strength ...ss gradually until they are lost entirely, then come in again a few seconds ...full volume. This peculiarity of radio reception, known as "fading," is ... the reflection and partial absorption of radio waves by clouds, ionization ...osphere by the sun's rays, and other similar phenomena.

... the automatic volume control action of the receiver will neutralize this varia- ...letely and maintain a uniform volume, the only indication of fading of the ...ave being a periodic increase and decrease in the amount of static noises, ...onally a variation in tone quality, as the station wave fades out and comes in ...owever, in extreme cases, where fading is so bad that nothing can be done to ...condition at the receiver, the station may drop out of hearing entirely.

NOISES IN RECEPTION

...f the frying or crackling noises heard in a radio receiver when the volume ...well advanced are due to electrical discharges in the atmosphere (known as ...the operation of electrical machinery in the neighborhood of the set. Such ...e may be caused by any motor-driven device, such as a vacuum cleaner, ...tc., since the brushes of electric motors invariably cause a good deal of spark- ...may be a flashing electric sign, an X-ray or Violet ray machine, an oil burner, ...refrigerator, a neon sign, traffic control signal, or similar device. It may ...sed by loose contact of an electric bulb or iron in its socket. Electric heating ...to their use of an automatic make and break mechanism for regulating tem- ...re particularly prone to cause such trouble. Noise from these devices may ...ired even though the offending device be located in a neighbor's home at ...ce from the receiver.

...tural and man-made static are picked up by the aerial and ground systems, ...ily be shown by disconnecting both aerial and ground wires from the set, ...e the noise to disappear. If the noise interferes too greatly with reception ...ue to atmospheric disturbances as evidenced by reception in neighboring ...ough investigation of electrical machinery in the immediate neighborhood ...r the matter should be taken up with your radio dealer or the local electric ...any. A noise which continues when the aerial and ground are disconnected ...due to a defective tube or poor connection in the set.

...se picked up by the receiver, whether due to static or the operation of elec- ...tus or machinery, is made up very largely of the higher notes. If, there- ...e control of the receiver is turned to the right to produce deeper, more ...c, the effect of noise on radio reception is greatly minimized. This is an ...oint to bear in mind since the proper use of the tone control may mean all ...between enjoying a good program and listening to a succession of static

GENERAL

The location of the set itself has much to do with the quality of it music will provide. If it is placed in a large, bare room with no rugs, the sound waves proceeding from it will be reflected from the floors and walls and cause a noticeable loss of tone quality. Fortunately, the average living room has most of its large reflecting surfaces deadened or broken up by rugs, furniture and curtains, so that reception is normal.

The music coming from a radio set sounds much more pleasing to those in front, rather than to one side of the speaker and, therefore, the set should face into the room.

The volume at which a radio set is operated also affects its tone. Best results will be obtained when the volume of the radio receiver is about the same as the original music being broadcast. If the volume is reduced appreciably below this value the lower tones will tend to drop out, giving the music a higher, more reedy tone. On the other hand, if the set is turned full on the lower tones are over-emphasized.

Without a tone control it is impossible to compensate for this apparent lack of tone balance. However, this change in tone value may be easily rectified through correct use of the tone control. For low volume the tone control should be turned toward the right to help the bass notes, while for great volume, the tone control should be turned more toward the left to bring out the high notes and counteract the over emphasis of the bass so that the same realistic reproduction is maintained at all volume levels.

ANTENNA SYSTEM

Satisfactory radio reception is more dependent upon a proper antenna-ground installation than upon any other factor outside of the set itself.

It is the function of the antenna system to collect the energy radiated by the various broadcasting stations and carry this energy to the set. It therefore behooves the purchaser of a new radio set to exercise care in selecting and installing a suitable antenna system, so that he may derive a maximum of enjoyment and utility from his set.

CHOOSING THE AERIAL

The most satisfactory aerial for any particular installation will vary widely in different locations, depending largely upon local structural details and sources of interference. As a general rule an outside aerial is preferable to an inside one.

When erecting the aerial always bear in mind the fact that the volume and selectivity of a set are largely governed by the length of the antenna system.

As the length of the aerial is increased, the volume of distant stations will be increased, but the selectivity of the set will be decreased. At the same time reception will tend to become noisier, as a long aerial picks up more interference proportionately. **On the other hand, as the length of the antenna system is decreased, volume on distant stations will diminish but selectivity will increase.**

It must be remembered that in some cases a shorter antenna will bring in more stations than a very long one, as the increased selectivity permits reception without interference from nearby stations.

The most suitable aerial for use in large cities or congested radio districts where interference is a serious problem is one whose total length, including lead-in, is from thirty to sixty feet. In rural sections where no interference is obtained and volume is of extreme importance, a total length of 80 to 150 feet may be best.

PLAINTIFFS' EXHIBIT NO. 93, Sheet 7, 696 393-394

may never be picked up again.. On other nights distant stations from one direction only may be unusually loud, and closer, more powerful, stations in other directions be inaudible. Quite often there may seem to be a perfect blanket that kills all distant reception. There is no telling beforehand how reception may be affected—actually it changes every minute.

Radio reception of distant stations, particularly in the summer months, is accompanied by more or less crackling or frying noises known as static. Although such noise is, as a rule, not at all noticeable during the reception of a local broadcast program, it may prove quite troublesome on distant stations. Fortunately static is very largely restricted to the higher notes so that if the tone control of the Stewart-Warner Radio Receiver is turned toward the right to produce a deeper tone, the noise will be greatly reduced so that the static-distorted program can be enjoyed without excessive interference. This is an important point to bear in mind.

FADING

Radio waves coming in from distant stations will occasionally decrease in strength more or less gradually until they are lost entirely, then come in again a few seconds later with full volume. This peculiarity of radio reception, known as "fading," is caused by the reflection and partial absorption of radio waves by clouds, ionization of the atmosphere by the sun's rays, and other similar phenomena.

Usually the automatic volume control action of the receiver will neutralize this variation completely and maintain a uniform volume, the only indication of fading of the received wave being a periodic increase and decrease in the amount of static noises, and occasionally a variation in tone quality, as the station wave fades out and comes in again. However, in extreme cases, where fading is so bad that nothing can be done to rectify this condition at the receiver, the station may drop out of hearing entirely.

NOISES IN RECEPTION

Most of the frying or crackling noises heard in a radio receiver when the volume control is well advanced are due to electrical discharges in the atmosphere (known as static) or the operation of electrical machinery in the neighborhood of the set. Such interference may be caused by any motor-driven device, such as a vacuum cleaner, vibrator, etc., since the brushes of electric motors invariably cause a good deal of sparking, or it may be a flashing electric sign, an X-ray or Violet ray machine, an oil burner, an electric refrigerator, a neon sign, traffic control signal, or similar device. It may even be caused by loose contact of an electric bulb or iron in its socket. Electric heating pads, due to their use of an automatic make and break mechanism for regulating temperature are particularly prone to cause such trouble. Noise from these devices may be encountered even though the offending device be located in a neighbor's home at some distance from the receiver.

Both natural and man-made static are picked up by the aerial and ground systems, as can readily be shown by disconnecting both aerial and ground wires from the set, thus causing the noise to disappear. If the noise interferes too greatly with reception and is not due to atmospheric disturbances as evidenced by reception in neighboring sets, a thorough investigation of electrical machinery in the immediate neighborhood is advised, or the matter should be taken up with your radio dealer or the local electric power company. A noise which continues when the aerial and ground are disconnected is probably due to a defective tube or poor connection in the set.

Most noise picked up by the receiver, whether due to static or the operation of electrical apparatus or machinery, is made up very largely of the higher notes. If, therefore, the tone control of the receiver is turned to the right to produce deeper, more mellow music, the effect of noise on radio reception is greatly minimized. This is an important point to bear in mind since the proper use of the tone control may mean all the difference between enjoying a good program and listening to a succession of static crashes.

GENERAL

The location of the set itself has much to do with the quality of it musicwill pro
If it is placed in a large, bare room with no rugs, the sound waves proceeding fro
will be reflected from the floors and walls and cause a noticeable loss of tone qua
Fortunately, the average living room has most of its large reflecting surfaces deade
or broken up by rugs, furniture and curtains, so that reception is normal.

The music coming from a radio set sounds much more pleasing to those in fr
rather than to one side of the speaker and, therefore, the set should face into the ro

The volume at which a radio set is operated also affects its tone. Best results
be obtained when the volume of the radio receiver is about the same as the orig
music being broadcast. If the volume is reduced appreciably below this value the lo
tones will tend to drop out, giving the music a higher, more reedy tone. On the ot
hand, if the set is turned full on the lower tones are over-emphasized.

Without a tone control it is impossible to compensate for this apparent lack of t
balance. However, this change in tone value may be easily rectified through corr
use of the tone control. For low volume the tone control should be turned tow
the right to help the bass notes, while for great volume, the tone control should be turn
more toward the left to bring out the high notes and counteract the over empha
of the bass so that the same realistic reproduction is maintained at all volume level

ANTENNA SYSTEM

**Satisfactory radio reception is more dependent upon a proper antenn
ground installation than upon any other factor outside of the set itself.**

It is the function of the antenna system to collect the energy radiated by the vari
broadcasting stations and carry this energy to the set. It therefore behooves the p
chaser of a new radio set to exercise care in selecting and installing a suitable ante
system, so that he may derive a maximum of enjoyment and utility from his set.

CHOOSING THE AERIAL

**The most satisfactory aerial for any particular installation will vary wid
in different locations, depending largely upon local structural details a
sources of interference. As a general rule an outside aerial is preferable
an inside one.**

When erecting the aerial always bear in mind the fact that the volume and selecti
of a set are largely governed by the length of the antenna system.

**As the length of the aerial is increased, the volume of distant stati
will be increased, but the selectivity of the set will be decreased.** At the s
time reception will tend to become noisier, as a long aerial picks up more interfer
proportionately. **On the other hand, as the length of the antenna syste
decreased, volume on distant stations will diminish but selectivity will
crease.**

It must be remembered that in some cases a shorter antenna will bring in
stations than a very long one, as the increased selectivity permits reception wit
interference from nearby stations.

The most suitable aerial for use in large cities or congested radio districts wher
terference is a serious problem is one whose total length, including lead-in, is from t
to sixty feet. In rural sections where no interference is obtained and volume is o
treme importance, a total length of 80 to 150 feet may be best.

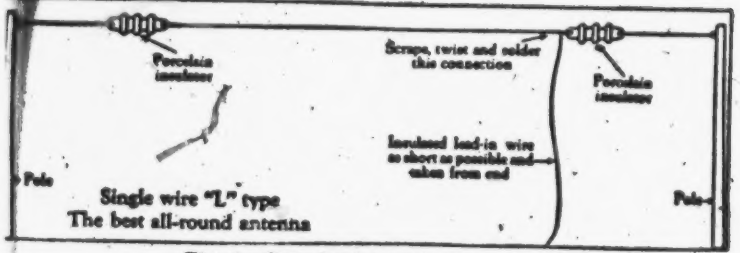

Fig. 1—Standard Single-Wire Aerial

OUTSIDE AERIALS

e following are a few general ideas to be kept in mind when installing an outside ia.

e aerial proper should consist of copper wire insulated at each end with a glazed ain or glass insulator.

erecting the aerial, be sure it is kept as far as possible from buildings, trees and obstructions. Do not run it alongside of electric light wires, a tin roof, or any ic structure.

oid placing the aerial above or below exposed wires installed by the ic Light or Telephone Company.

e best aerial for general use is a simple "L" type, illustrated in Fig. 1. It should cted as high as possible, as such an aerial will have less directional properties and ndency to pick up power line interference than a low aerial with a long horizontal The lead-in should come to the set by the most direct route, and should be kept rom the side of the building by porcelain knobs. **It must always be securely ed to the aerial.**

y frequently this point is overlooked when installing an aerial, as it is generally enient to do any soldering on the roof. A method that may conveniently be wed is to solder the lead-in wire on to the aerial about three feet from the end taking it up to the roof where it is usually too difficult to do any effective ng.

imple and very effective aerial, requiring no soldering, is made by using one con- length of No. 14 weather-proof wire to make up aerial and lead-in. **An insu- ire will make as efficient an aerial as a bare wire.**

e continuous length of wire is not used, and no solder is available, a satisfactory y be made by carefully scraping both ends of the wire for several inches and them securely together. The connection should then be well wrapped with tin foil and then taped to make it weather proof. The tin foil must not be since the sulphur contained in most friction tapes will corrode the connection e poor reception eventually unless the foil is used to protect the wire.

LEAD-IN

ntrance to the building may be made through a porcelain tube pushed through illed in the top of the window frame, or by means of a window strip insulator. r way is to carry the lead-in wire over the top of the window. The last method ter insulation than most of the window strips now on the market. If a window ed it is best to solder the wire on both ends rather than rely upon the spring ns which will corrode and cause poor contact within a short space of time.

Cheap window strips are potential sources of trouble. Their insulation is very poor and in damp weather they lose a large percentage of the energy collected by the aerial in addition to causing noises in the set.

Very often **shielded wire,** used as a lead-in, is extremely effective in reducing noises in reception caused by electrical machinery operated in the immediate vicinity.

INSIDE AERIAL

Frequently very satisfactory results may be obtained with an inside aerial consisting of forty to sixty feet of **insulated** wire placed around the picture moulding of a room. Any insulated copper wire may be used.

An inside aerial should not be erected, except where it is impossible to erect an outside one.

It should be remembered that an inside aerial must be just as effectively insulated as an outside one. Often when erecting such an aerial staples are driven through the wire into the wood moulding causing a serious loss of the minute energy collected by the aerial. Insulated staples should be used and care taken when driving them in.

INSTALLATION OF GROUND

Since the ground is an essential part of the aerial system, as much care must be taken in securing a good ground as in erecting a good aerial.

In a great number of installations a satisfactory ground can be made by connecting to a cold water pipe. This connection should be made by soldering the wire directly to the pipe or by some approved form of ground clamp. The pipe should be thoroughly cleaned and all paint and corrosion removed at the point at which the connection is made. Radiators may also be used for grounds, but do not always give good results, particularly **steam radiators,** since they are frequently insulated from ground by non-metallic expansion joints.

When the wiring of a home conforms to underwriters' specifications so that all conduit piping is grounded a wire fastened to the metal plate of a base-board outlet makes a satisfactory ground.

HOW TO CONNECT THE SET

Before connecting up the set, be sure that your home is supplied with the voltage and current for which it is designed, as indicated on the name plate on the rear of the chassis. If you are in doubt, call up your local power company for the necessary information. Connecting the set to a supply outlet furnishing the wrong type of current will result in improper operation or damage.

Your radio receiver is designed to operate at 115 volts. If the voltage in your home rises above 120 volts, you should purchase from your radio dealer a suitable voltage regulator to reduce the line voltage to the proper value so that your radio tubes will give you satisfactory service.

Installation of the set can best be accomplished in the following manner:

1. Remove the set from the packing carton or crate.
2. Remove the packing material holding the tubes in place. Note the two tubes with the small metal caps and the two wires with metal clips made to fit over these caps. Fit the clips over the tube caps if this has not already been done. The length of the wires is such that the clips cannot be connected to the wrong tubes.
3. If your receiver **is not** used in a short wave combination, connect the aerial to the long blue wire you find in back of the set, and connect the ground to the black wire.
4. If your receiver is used in a short wave combination, the aerial and ground should be connected as explained in the separate short wave instruction book.
5. Plug the extension cord of the set into the most convenient outlet. It is now ready for operation.

PLAINTIFFS' EXHIBIT No. 93, Sheet 8, 395— 697 396

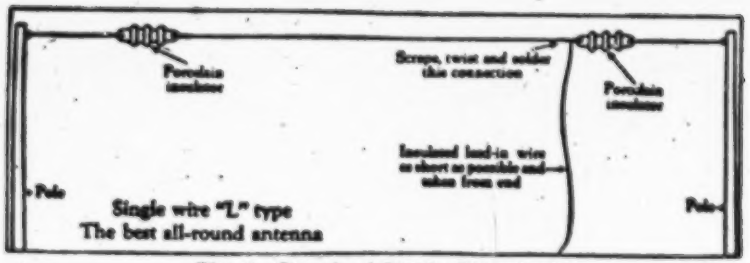

Fig. 1—Standard Single-Wire Aerial

OUTSIDE AERIALS

The following are a few general ideas to be kept in mind when installing an outside antenna.

The aerial proper should consist of copper wire insulated at each end with a glazed porcelain or glass insulator.

In erecting the aerial, be sure it is kept as far as possible from buildings, trees and other obstructions. Do not run it alongside of electric light wires, a tin roof, or any metallic structure.

Avoid placing the aerial above or below exposed wires installed by the Electric Light or Telephone Company.

The best aerial for general use is a simple "L" type, illustrated in Fig. 1. It should be erected as high as possible, as such an aerial will have less directional properties and less tendency to pick up power line interference than a low aerial with a long horizontal lead. The lead-in should come to the set by the most direct route, and should be kept away from the side of the building by porcelain knobs. **It must always be securely soldered to the aerial.**

Very frequently this point is overlooked when installing an aerial, as it is generally inconvenient to do any soldering on the roof. A method that may conveniently be employed is to solder the lead-in wire on to the aerial about three feet from the end before taking it up to the roof where it is usually too difficult to do any effective soldering.

A simple and very effective aerial, requiring no soldering, is made by using one continuous length of No. 14 weather-proof wire to make up aerial and lead-in. **An insulated wire will make as efficient an aerial as a bare wire.**

If one continuous length of wire is not used, and no solder is available, a satisfactory joint may be made by carefully scraping both ends of the wire for several inches and twisting them securely together. The connection should then be well wrapped with ordinary tin foil, and then taped to make it weather-proof. The tin foil must not be omitted, since the sulphur contained in most friction tapes will corrode the connection and cause poor reception eventually unless the foil is used to protect the wire.

LEAD-IN

The entrance to the building may be made through a porcelain tube pushed through a hole drilled in the top of the window frame, or by means of a window strip insulator. A simpler way is to carry the lead-in wire over the top of the window. The last method offers greater insulation than most of the window strips now on the market. If a window strip is used it is best to solder the wire on both ends rather than rely upon the spring connections which will corrode and cause poor contact within a short space of time.

Cheap window strips are potential sources of trouble. Their insulation is very p and in damp weather they lose a large percentage of the energy collected by the ae in addition to causing noises in the set.

Very often **shielded wire,** used as a lead-in, is extremely effective in reduc noises in reception caused by electrical machinery operated in the immediate vicini

INSIDE AERIAL

Frequently very satisfactory results may be obtained with an inside aerial consisti of forty to sixty feet of **insulated** wire placed around the picture moulding of a roo Any insulated copper wire may be used.

An inside aerial should not be erected, except where it is impossible to erect an ou side one.

It should be remembered that an inside aerial must be just as effectively insulat as an outside one. Often when erecting such an aerial staples are driven through t wire into the wood moulding causing a serious loss of the minute energy collected b the aerial. Insulated staples should be used and care taken when driving them in.

INSTALLATION OF GROUND

Since the ground is an essential part of the aerial system, as much ca must be taken in securing a good ground as in erecting a good aerial.

In a great number of installations a satisfactory ground can be made by connecti to a cold water pipe. This connection should be made by soldering the wire direct to the pipe or by some approved form of ground clamp. The pipe should be thorough cleaned and all paint and corrosion removed at the point at which the connection made. Radiators may also be used for grounds, but do not always give good result particularly **steam radiators,** since they are frequently insulated from ground b non-metallic expansion joints.

When the wiring of a home conforms to underwriters' specifications so that conduit piping is grounded a wire fastened to the metal plate of a base-board outl makes a satisfactory ground.

HOW TO CONNECT THE SET

Before connecting up the set, be sure that your home is supplied with the volta and current for which it is designed, as indicated on the name plate on the rear of t chassis. If you are in doubt, call up your local power company for the necessary i formation. Connecting the set to a supply outlet furnishing the wrong type of curre will result in improper operation or damage.

Your radio receiver is designed to operate at 115 volts. If the voltage in your hor rises above 120 volts, you should purchase from your radio dealer a suitable volta regulator to reduce the line voltage to the proper value so that your radio tubes w give you satisfactory service.

Installation of the set can best be accomplished in the following manner:

1. Remove the set from the packing carton or crate.
2. Remove the packing material holding the tubes in place. Note the two tub with the small metal caps and the two wires with metal clips made to fit over th caps. Fit the clips over the tube caps if this has not already been done. The length of t wires is such that the clips cannot be connected to the wrong tubes.
3. If your receiver is **not** used in a short wave combination, connect the aer to the long blue wire you find in back of the set, and connect the ground to the black wi
4. If your receiver is used in a short wave combination, the aerial and grou should be connected as explained in the separate short wave instruction book.
5. Plug the extension cord of the set into the most convenient outlet. It is n ready for operation.

TUNING INSTRUCTIONS

the set by rotating the switch-tone control knob (Fig. 2) to the right **enough to allow the switch to snap on.** Turning this knob further one control, which should not be adjusted until later.

ttention to a sizzling or crackling noise that may be heard when rned on for the first time or after a long period of idleness. This d by an automatic forming process going on in the self-healing filter con- set, and stops in a few minutes.

he volume control about half way to the right.

Fig. 2 Operating Controls

few seconds for the tubes to warm up. There should be a slight rushing und coming from the speaker to indicate the set is ready to be operated. sound is not heard, turn the volume control further toward the right; turn the volume control to the left.

rn the center tuning control slowly to bring in stations. You will notice n occupies a certain amount of space on the dial in which its volume re-

mains fairly constant. Move the tuning pointer forward and back to determine the width of this space, and then finally set the pointer exactly in the center. This point will give you best tone quality with full representation of all the deep bass notes. Although it will be possible to obtain somewhat greater volume on either side of this correct tuning point, particularly on local stations, the tone will be harsh and shrill, accompanied by hissing and crackling noises.

This tuning action, which is obtained with all automatic volume control receivers, is quite different from the tuning of radio receivers not having this feature. It is therefore highly important to tune the set very carefully, going up and back through the station at least once or twice to be sure that you stop at exactly the point that gives the deepest, richest tone quality. This will require a little practice at first, as the tendency will be to stop tuning too soon, or to tune a little to either side of the correct point, since this results in slightly greater volume, even though tone quality is poorer. The point to remember is that you must tune for the lowest tone, and NOT for the greatest volume.

As a result of the automatic volume control, the sensitivity of the receiver increases as you tune away from a station, so that the slight static noises always present in the air increase at the same time. This accounts for the crackling and frying noises heard between stations. To reduce this noise as much as possible, learn to tune with the volume control turned as far to the left as practical, and bring up the volume to the correct value **after** the station is tuned in correctly.

5. After the desired station is tuned in correctly, the tone control may be adjusted to suit the individual requirements of the listener. **With the tone control all the way toward the left, music is reproduced with the greatest clarity and faithfulness to the original.** As this control is turned toward the right, the lower tones receive more and more emphasis, so that the music takes on an apparently deeper pitch. The best setting for the tone control obviously depends entirely upon the personal preference of the listener.

In addition to regulating tone, the tone control has a very important function in reducing static and those interference noises created by the operation of electrical machinery. As it happens, these crackling and frying noises are very largely composed of the higher tones, so that turning the tone control toward the right reduces this interference to a very great extent.

6. The number system on the dial of your radio receiver is conveniently calibrated to indicate broadcasting station frequencies in kilocycles. However, the final zero has been omitted from the dial numbers, so that dial number 110 corresponds to 1100 kilocycles, dial position 55 to 550 kilocycles, and so on.

7. It may be noticed occasionally when listening to distant stations that the background noise increases and decreases in a regular fashion, although the program itself does not fluctuate in volume. This is due entirely to fading of the incoming wave (See Page 4). The automatic volume control prevents any change in volume, but as the signal tends to fade out, the sensitivity of the set automatically increases, and the static that is always present becomes greater in proportion to this weaker signal and is, therefore, heard more loudly.

8. To shut off the set, turn the switch-tone control all the way back to the left until the sharp click of the switch is heard and the pilot light in back of the dial goes out.

PLAINTIFFS' EXHIBIT NO. 93, Sheet 9,
397-398
698

TUNING INSTRUCTIONS

1. Turn on the set by rotating the switch-tone control knob (Fig. 2) to the right **only just far enough to allow the switch to snap on.** Turning this knob further operates the tone control, which should not be adjusted until later.

Pay no attention to a sizzling or crackling noise that may be heard when the set is turned on for the first time or after a long period of idleness. This noise is caused by an automatic forming process going on in the self-healing filter condensers of the set, and stops in a few minutes.

2. Turn the volume control about half way to the right.

Fig. 2 Operating Controls

3. Wait a few seconds for the tubes to warm up. There should be a slight rushing or crackling sound coming from the speaker to indicate the set is ready to be operated. If the crackling sound is not heard, turn the volume control further toward the right; if it is too loud, turn the volume control to the left.

4. Now turn the center tuning control slowly to bring in stations. You will notice that each station occupies a certain amount of space on the dial in which its volume remains fairly constant. Move the tuning pointer forward and back to determine the width of this space, and then finally set the pointer exactly in the center. This point will give you best tone quality with full representation of all the deep bass notes. Although it will be possible to obtain somewhat greater volume on either side of the correct tuning point, particularly on local stations, the tone will be harsh and shrill, accompanied by hissing and crackling noises.

This tuning action, which is obtained with all automatic volume control receivers, is quite different from the tuning of radio receivers not having this feature. It is therefore highly important to tune the set very carefully, going up and back through the station at least once or twice to be sure that you stop at exactly the point that gives the deepest, richest tone quality. This will require a little practice at first, as the tendency will be to stop tuning too soon, or to tune a little to either side of the correct point, since this results in slightly greater volume, even though tone quality is poorer. The point to remember is that you must tune for the lowest tone, and NOT for the greatest volume.

As a result of the automatic volume control, the sensitivity of the receiver increases as you tune away from a station, so that the slight static noises always present in the air increase at the same time. This accounts for the crackling and frying noises heard between stations. To reduce this noise as much as possible, learn to tune with the volume control turned as far to the left as practical, and bring up the volume to the correct value **after** the station is tuned in correctly.

5. After the desired station is tuned in correctly, the tone control may be adjusted to suit the individual requirements of the listener. **With the tone control all the way toward the left, music is reproduced with the greatest clarity and faithfulness to the original.** As this control is turned toward the right, the lower tones receive more and more emphasis, so that the music takes on an apparently deeper pitch. The best setting for the tone control obviously depends entirely upon the personal preference of the listener.

In addition to regulating tone, the tone control has a very important function in reducing static and those interference noises created by the operation of electric machinery. As it happens, these crackling and frying noises are very largely composed of the higher tones, so that turning the tone control toward the right reduces this interference to a very great extent.

6. The number system on the dial of your radio receiver is conveniently calibrated to indicate broadcasting station frequencies in kilocycles. However, the final zero has been omitted from the dial numbers, so that dial number 110 corresponds to 1100 kilocycles, dial position 55 to 550 kilocycles, and so on.

7. It may be noticed occasionally when listening to distant stations that the background noise increases and decreases in a regular fashion, although the program itself does not fluctuate in volume. This is due entirely to fading of the incoming wave (See Page 4). The automatic volume control prevents any change in volume, but when the signal tends to fade out, the sensitivity of the set automatically increases, and the static that is always present becomes greater in proportion to this weaker signal and is, therefore, heard more loudly.

8. To shut off the set, turn the switch-tone control all the way back to the left until the sharp click of the switch is heard and the pilot light in back of the dial goes out.

TUBES USED

...bes used and their position in the set is shown in Fig. 3.

...8 type tube is identical in appearance to the '57, the only difference between ... as far as the eye can judge, being in the tube number stamped into the bakelite ...hen replacing tubes it is, therefore, necessary to exercise care so as not to ...ge them. While the set will operate with a '57 tube in a '58 socket or vice ...rformance will be very poor.

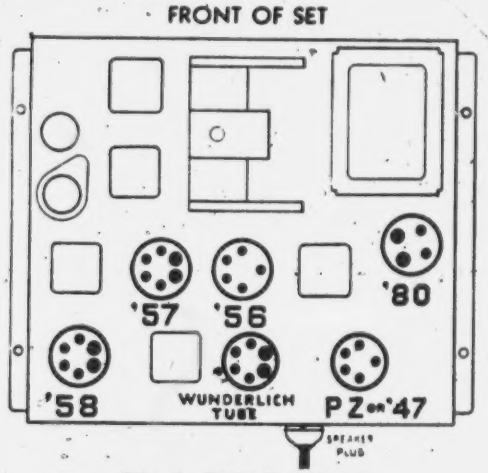

Fig. 3—Tube Positions

RECEIVING SHORT WAVES

...t wave reception brings to the broadcast listener a form of entertainment far ...t from that provided by his broadcast receiver. A good short wave converter ...places the world at his finger tips at all hours of the day. A slight movement ...al and he is listening to England; another position and Paris is at hand; still ...and Germany is heard from. A search closer home brings him the exciting, ...-minute police calls, laden with action and mystery. For a far different type ...e may listen to air-plane pilots requesting and receiving weather reports and ...ections from their ground stations to enable them to safely pilot their planes ...og and storm.

...radio dealer can supply you with a short wave converter made especially for ...so that you can enjoy both broadcast and short wave programs. Complete ...ns for reception of short waves are supplied with the converter.

SUGGESTIONS

...e is poor

...You may have a defective tube.
Your aerial or ground may be poor. Inside aerials very seldom give as much volume as outside ones.
You may be shielded by a steel building.
You may not have followed instructions. Read the instructions again very carefully, making certain that you have followed them exactly.
The line voltage may be low.
You may have a '57 tube in the '58 socket.
The aerial lead-in connection may be broken.
The aerial wire may be disconnected from the set.

If the set hums—

1. Test your tubes or, if possible, try other tubes.

If the set tunes broadly—

1. Your aerial may be too long.
2. Your ground system may be too long. This is quite common if the radio set is located several floors above the ground, or a steam system that is not grounded is being used as a ground.

If tone quality is poor—

1. The tone control may not be adjusted properly.
2. You may have a poor output pentode tube.
3. The speaker may be defective.

WARRANTY

This is to certify that we, the STEWART-WARNER CORPORATION, Chicago, Illinois, warrant the Stewart-Warner Radio Receiver manufactured by us, to be free from defects in material and workmanship under normal use and service, our obligation under this warranty being limited to repairing or replacing, through an accredited Stewart-Warner distributor, any part or parts of said product that in our judgment show evidence of such defect provided that said product shall have been registered with us at the time of purchase; and provided further, that said product shall be returned to the distributor, transportation prepaid, within 90 days from the date of delivery thereof by the dealer to the purchaser.

This warranty is expressly in lieu of all other warranties, expressed or implied, and of all other obligations on our part, and no representative or other person is authorized or permitted to make any warranty or assume for this corporation any liability not strictly in accordance with the foregoing.

This warranty shall not apply to any product which has been tampered with or altered in any way, or which has been subjected to misuse, negligence or accident, or which has the serial number altered, effaced or removed.

We make no warranty whatsoever in respect to accessories or parts not manufactured by us, as they are usually warranted by their respective manufacturers.

IN WITNESS WHEREOF, this warranty is endorsed by the

Stewart-Warner Corporation, Chicago.

PLAINTIFFS' EXHIBIT NO. 93, Sheet 10, 399— 400 699

TUBES USED

The tubes used and their position in the set is shown in Fig. 3.

The '58 type tube is identical in appearance to the '57, the only difference between the two as far as the eye can judge, being in the tube number stamped into the bakelite base. When replacing tubes it is, therefore, necessary to exercise care so as not to interchange them. While the set will operate with a '57 tube in a '58 socket or vice versa, performance will be very poor.

FRONT OF SET

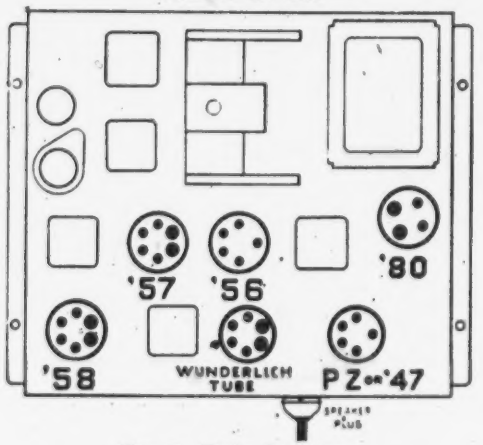

Fig. 3—Tube Positions

RECEIVING SHORT WAVES

Short wave reception brings to the broadcast listener a form of entertainment far different from that provided by his broadcast receiver. A good short wave converter literally places the world at his finger tips at all hours of the day. A slight movement of the dial and he is listening to England; another position and Paris is at hand; still another and Germany is heard from. A search closer home brings him the exciting, up-to-the-minute police calls, laden with action and mystery. For a far different type of thrill he may listen to air-plane pilots requesting and receiving weather reports and flying directions from their ground stations to enable them to safely pilot their planes through fog and storm.

Your radio dealer can supply you with a short wave converter made especially for your set so that you can enjoy both broadcast and short wave programs. Complete instructions for reception of short waves are supplied with the converter.

SUGGESTIONS

If Volume is poor

1. You may have a defective tube.
2. Your aerial or ground may be poor. Inside aerials very seldom give as much volume as outside ones.
3. You may be shielded by a steel building.
4. You may not have followed instructions. Read the instructions again very carefully, making certain that you have followed them exactly.
5. The line voltage may be low.
6. You may have a '57 tube in the '58 socket.
7. The aerial lead-in connection may be broken.
8. The aerial wire may be disconnected from the set.

If the set hums—

1. Test your tubes or, if possible, try other tubes.

If the set tunes broadly—

1. Your aerial may be too long.
2. Your ground system may be too long. This is quite common if the radio is located several floors above the ground, or a steam system that is not grounded is being used as a ground.

If tone quality is poor—

1. The tone control may not be adjusted properly.
2. You may have a poor output pentode tube.
3. The speaker may be defective.

WARRANTY

This is to certify that we, the STEWART-WARNER CORPORATION, Chicago, Illinois, warrant the Stewart-Warner Radio Receiver manufactured by us, to be free from defects in material and workmanship under normal use and service, our obligation under this warranty being limited to repairing or replacing, through an accredited Stewart-Warner distributor, any part or parts of said product that in our judgment show evidence of such defect provided that said product shall have been registered with us at the time of purchase; and provided further, that said product shall be returned to the distributor, transportation prepaid, within 90 days from the date of delivery thereof by the dealer to the purchaser.

This warranty is expressly in lieu of all other warranties, expressed or implied, and of all other obligations on our part, and no representative or other person is authorized or permitted to make any warranty or assume for this corporation any liability not strictly in accordance with the foregoing.

This warranty shall not apply to any product which has been tampered with or altered in any way, or which has been subjected to misuse, negligence or accident, or which has the serial number altered, effaced or removed.

We make no warranty whatsoever in respect to accessories or parts not manufactured by us, as they are usually warranted by their respective manufacturers.

IN WITNESS WHEREOF, this warranty is endorsed by the

Stewart-Warner Corporation, Chicago.

PLAINTIFFS' EXHIBIT NO. 93, Sheet 11,

IMPORTANT!

YOUR Stewart-Warner Radio Receiver is not guaranteed unless you have filled in and mailed the warranty card accompanying each set within ten days after the purchase of the set. Be sure and ask your dealer for this card if it does not accompany the set.

STEWART-WARNER CORPORATION

CHICAGO, ILL., U. S. A.

Form 5607—6-13-32

Printed in U.S. A.

CHASSIS MODEL 105 RECEIVER MODELS 50 to 59

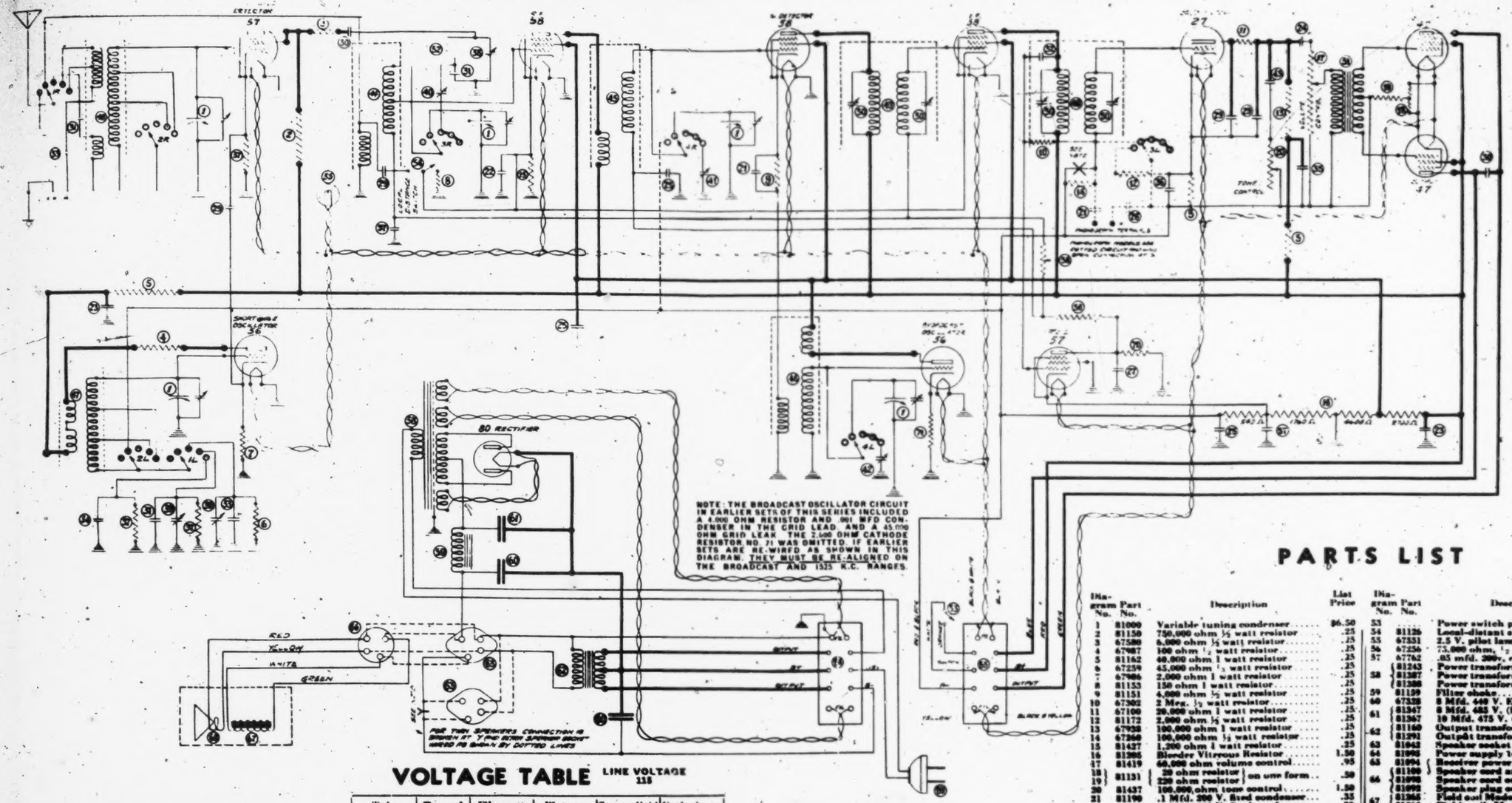

TUBE LOCATIONS

FRONT OF SET

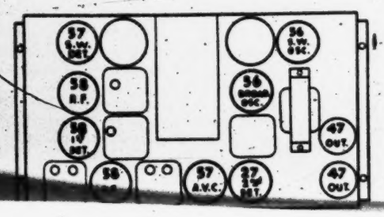

VOLTAGE TABLE

LINE VOLTAGE 115

Tube Circuit	Type of Tube	Filament Voltage	Plate to Chassis	Screen Grid to Chassis	Cathode to Chassis
Short Wave Oscillator	56	2.4	81		6.2
Short Wave Detector	57	2.4	21	21	1.9
R. F.	58	2.4	188	102	2.4
Broadcast Oscillator	56	2.4	102		0
First Detector	58	2.4	188	102	9
I. F.	58	2.42	188	102	2.2
A. V. C.	57	2.44	0	0	—39
Second Detector	27	2.42	79		—32
Output	47	2.4	177	188	Fil. to chassis —67 Fil. to grid

CAUTION

Reading must be taken with the set tuned to one of the short wave ranges, and the local - distance switch pulled out.

All D.C. voltages are measured between the tube socket terminal and chassis, using a high resistance voltmeter of 1000 ohms per volt. Readings will vary depending upon voltage range of meter, being higher for higher range instruments. This variation is most marked for all detector and oscillator D.C. voltages.

Readings taken with set testers plugged into tube sockets may deviate considerably

PARTS LIST

Diagram No.	Part No.	Description	List Price
1	81000	Variable tuning condenser	$6.50
2	81150	750,000 ohm ½ watt resistor	.25
3	67580	6,000 ohm ½ watt resistor	.25
4	67987	100 ohm ½ watt resistor	.25
5	81162	40,000 ohm 1 watt resistor	.25
6	67259	45,000 ohm ½ watt resistor	.25
7	67986	2,000 ohm 1 watt resistor	.25
8	81153	150 ohm 1 watt resistor	.25
9	81151	4,000 ohm ½ watt resistor	.25
10	67302	2 Meg. ½ watt resistor	.25
11	67100	20,000 ohm 1 watt resistor	.25
12	81172	2,000 ohm ½ watt resistor	.25
13	67938	100,000 ohm 1 watt resistor	.25
14	67260	100,000 ohm ½ watt resistor	.25
15	81427	1,200 ohm 1 watt resistor	.25
16	81366	Bleeder Vitreous Resistor	1.50
17	81419	60,000 ohm volume control	.95
18	81131	20 ohm resistor } on one form	.50
19		220 ohm resistor }	
20	81437	100,000 ohm tone control	1.50
21	81190	.1 Mfd. 200 V. fixed condenser	.35
22	67294	.1 Mfd. 200 V. fixed condenser	.30
23	67296	.1 Mfd. 400 V. fixed condenser	.40
24	81191	.1 Mfd. 400 V. fixed condenser	.45
25	67297	.25 Mfd. 200 V. fixed condenser	.40
26	81345	.25 Mfd. 200 V. fixed condenser	.45
27	67299	.02 Mfd. 400 V. fixed condenser	.30
28	81333	.02 Mfd. 400 V. fixed condenser	.35
29	81186	.001 Mfd. fixed condenser	.30
30	81415	.002 Mfd. 1000 V. fixed condenser	.35
31	81155	.0005 Mfd. fixed condenser	.25
32	81157	.00025 Mfd. fixed condenser	.25
33	81158	.0001 Mfd. fixed condenser	.25
34	81282	.005 Mfd. fixed condenser	.30
35	81081	.5 Mfd. 400 V. fixed condenser	.50
36	81083	.1 Mfd. 100 V. fixed condenser	.75
37	81152	10,000 ohm ½ watt resistor	.25
38	81366	Trimmer Condenser	.50
39	81231	Trimmer Condenser	.50
40	81365	Trimmer Assembly	.40
41	81301	Double trimmer condenser } one	.60
42		Double trimmer condenser } unit	
43	81445	.02 Mfd. 400 V. fixed condenser	.60
44	81189	"A" Tuning coil	1.00
45	81188	"B" Tuning coil	1.00
46	81187	"C" Tuning coil	1.00
47	81178	Tuning coil	1.00

Diagram No.	Part No.	Description	List Price
53		Power switch part of 81137	
54	81126	Local-distant switch	.60
55	67351	2.5 V. pilot lamp	.25
56	67256	75,000 ohm, ½ watt resistor	.25
57	67762	.05 mfd. 200v. condenser	.35
58	81243	Power transformer, 115 V. 60 cyc.	10.75
	81287	Power transformer, 115 V. 25 cyc.	12.75
	81288	Power transformer, 230 V. 60 cyc.	14.00
59	81139	Filter choke	2.75
60	67328	8 Mfd. 440 V. Electrolytic cond.	1.75
61	81347	8 Mfd. 485 V. (for 60 cycles)	1.75
	81367	10 Mfd. 475 V. (for 25 cycles)	2.00
62	81140	Output transformer, single speaker	2.75
	81291	Output transformer, twin speaker	2.75
63	81042	Speaker socket	.15
64	81095	Power supply terminal socket	.30
65	81094	Receiver power terminal plug	.45
	81100	Speaker cord and plug	.60
66	81098	Speaker cord only	.30
	81099	Speaker plug only	.30
67	81265	Field coil Model R-309-A (400 ohm)	3.50
	81266	Field coil Models RL-309-A or RH-309-A (220 ohm)	3.50
68	81276	Diaphragm Assembly (Model R-309-A)	2.75
	81276	Diaphragm Assembly (Model RL-309-A)	2.75
	81279	Diaphragm Assembly (Model RH-309-A)	2.75
69	81346	Cord and plug	.60
70	81309	1, Meg. ½ watt resistor	.30

Miscellaneous Parts

	81241	Felt Knob Washer	06.01
	67263	No. 6 Special screw for bottom	.20
	67964	I. F. Short Tube Shield	.30
	81097	Tube Shield Cover	.35
	81011	Escutcheon Plate	.15
	81012	Tube Shield Shell	.15
	81099	Terminal Plug Cover	.20
	81107	Small Rubber Drive Bushing	.25
	81171	Large Rubber Drive Bushing	.25
	81210	R. F. Coil Shield	.35
	81212	I. F. Coil Shield	.30
	81213	B. F. Coil Shield	.30

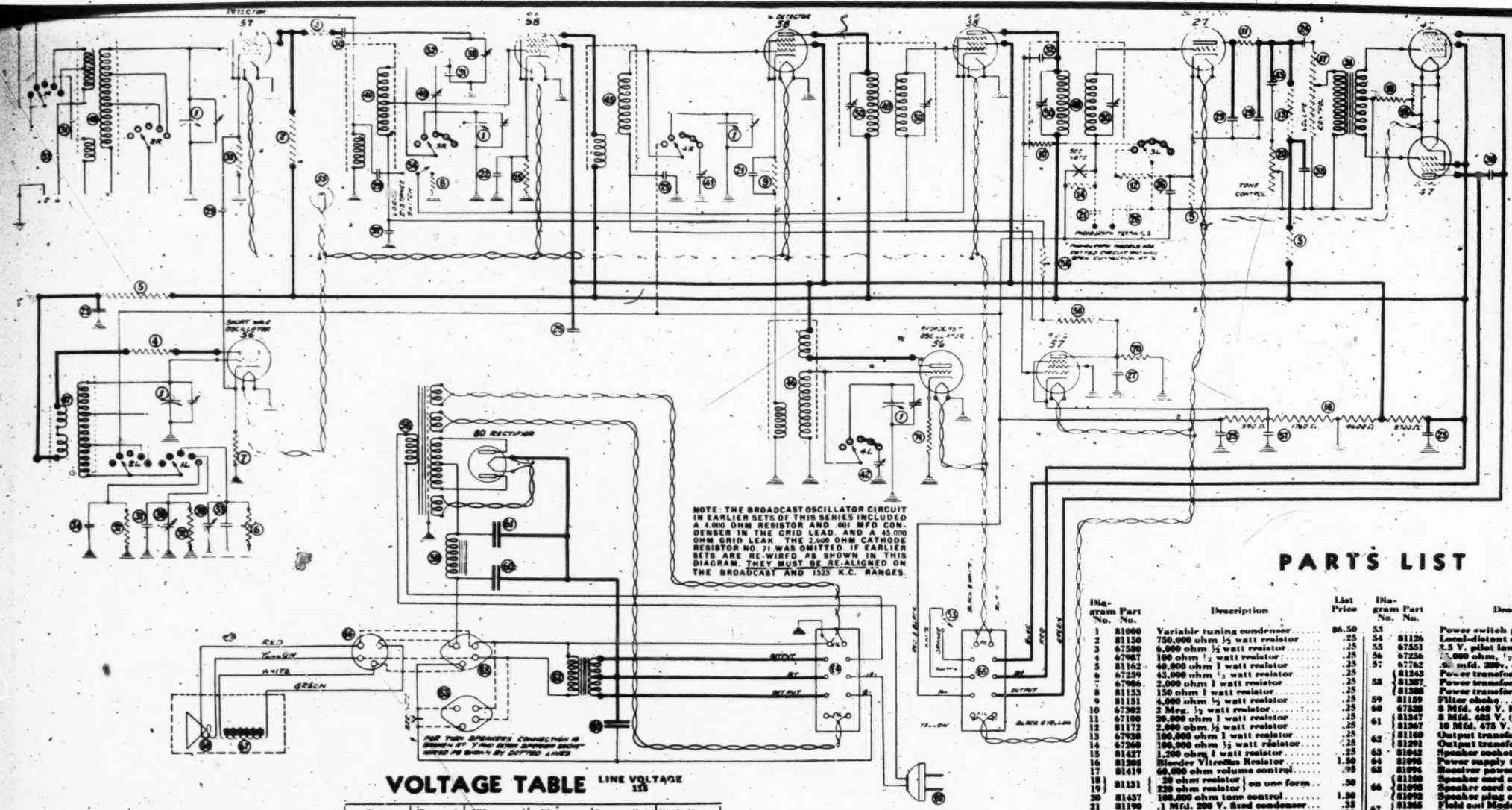

VOLTAGE TABLE

LINE VOLTAGE 115

Tube Circuit	Type of Tube	Filament Voltage	Plate to Chassis	Screen Grid Chassis	Cathode to Chassis
Short Wave Oscillator	56	2.4	81	-	8.2
Short Wave Detector	57	2.4	21	21	1.9
R. F.	58	2.4	188	182	2.4
Broadcast Oscillator	56	2.4	182		0
First Detector	58	2.4	186	182	9
I. F.	58	2.62	188	182	3.2
A. V. C.	57	2.44	0	0	—89
Second Detector	27	2.62	70		—82
Output	47	2.8	177	188	Fil. to chassis —97 Fil. to grid 16.5
Rectifier	80	4.9			

TUBE LOCATIONS

FRONT OF SET

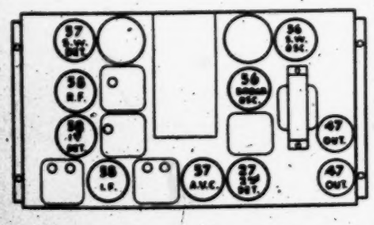

NOTE: Use an 80 tube in the Power Unit.

CAUTION

Reading must be taken with the set tuned to one of the short wave ranges, and the local-distance switch pulled out.

All D.C. voltages are measured between the tube socket terminal and chassis, using a high resistance voltmeter of 1000 ohms per volt. Readings will vary depending upon voltage range of meter, being higher for higher range instructions. This variation is most marked for all detector and oscillator D.C. voltages.

Readings taken with set testers plugged into tube sockets may deviate considerably from the values given in this table, due to their internal circuit arrangements.

PARTS LIST

Diagram No.	Part No.	Description	List Price
1	81000	Variable tuning condenser	$6.50
2	67150	750,000 ohm ½ watt resistor	.25
3	67500	6,000 ohm ½ watt resistor	.25
4	67987	100 ohm ½ watt resistor	.25
5	81162	40,000 ohm 1 watt resistor	.25
6	67259	45,000 ohm ½ watt resistor	.25
7	67986	2,000 ohm 1 watt resistor	.25
8	81153	150 ohm 1 watt resistor	.25
9	67500	6,000 ohm ½ watt resistor	.25
10	67302	2 Meg. ½ watt resistor	.25
11	67100	20,000 ohm 1 watt resistor	.25
12	81172	2,000 ohm ½ watt resistor	.25
13	67938	100,000 ohm 1 watt resistor	.25
14	67266	100,000 ohm ½ watt resistor	.25
15	81427	1,200 ohm 1 watt resistor	.25
16	81286	Bleeder Vitreohm Resistor	1.50
17	81419	60,000 ohm volume control	.95
18	81131	20 ohm resistor } on one form	.50
19		220 ohm resistor }	
20	81437	100,000 ohm tone control	1.00
21	81196	.1 Mfd. 200 V. fixed condenser	.35
22	67294	.1 Mfd. 200 V. fixed condenser	.30
23	67296	.1 Mfd. 400 V. fixed condenser	.40
24	81191	.1 Mfd. 400 V. fixed condenser	.45
25	67297	.25 Mfd. 200 V. fixed condenser	.40
26	81345	.25 Mfd. 200 V. fixed condenser	.45
27	67295	.02 Mfd. 400 V. fixed condenser	.30
28	81333	.02 Mfd. 400 V. fixed condenser	.35
29	81186	.001 Mfd. fixed condenser	.30
30	81415	.002 Mfd. 1000 V. fixed condenser	.35
31	81185	.0005 Mfd. fixed condenser	.25
32	81157	.00025 Mfd. fixed condenser	.30
33	81158	.0001 Mfd. fixed condenser	.25
34	81332	.005 Mfd. fixed condenser	.30
35	81081	.5 Mfd. 400 V. fixed condenser	.50
36	81083	.1 Mfd. 100 V. fixed condenser	.75
37	81153	10,000 ohm ½ watt resistor	.25
38	67288	Trimmer Condenser	.50
39	81251	Trimmer Condenser	.50
40	81302	Trimmer Assembly	.40
41	81301	Double trimmer condenser } one	.60
42		Double trimmer condenser } unit	
43	81445	.02 Mfd. 400 V. fixed condenser	.40
44	81189	"A" Tuning coil	1.00
45	81190	"B" Tuning coil	1.00
46	81406	"C" Tuning coil	1.00
47	81178	Tuning coil	1.30
48	81179	Tuning coil	1.75
49	81254	I.F. transformer coils	1.00
50	81200	I.F. tuning condensers	.40
51	81276	Input push-pull transformer	2.75
52	81305	R.F. choke coil	.35
53		Power switch part of 81437	
54	81126	Local-distant switch	.40
55	67551	2.5 V. pilot lamp	.25
56	67256	5,000 ohm, ½ watt resistor	.25
57	67762	.05 mfd. 200 v. condenser	.35
58	81243	Power transformer, 115 V. 60 cyc.	10.75
	81287	Power transformer, 115 V. 25 cyc.	12.75
	81288	Power transformer, 230 V. 60 cyc.	14.50
59	81189	Filter choke	2.75
60	67328	8 Mfd. 440 V. Electrolytic cond.	1.75
61	81347	8 Mfd. 485 V. (for 60 cycles)	1.75
	81367	10 Mfd. 473 V. (for 25 cycles)	2.00
62	81160	Output transformer, single speaker	2.75
	81291	Output transformer, twin speaker	2.75
63	81043	Speaker socket	.15
64	81098	Power supply terminal socket	.30
65	81094	Receiver power terminal plug	.45
66	81180	Speaker cord and plug	.40
	81098	Speaker cord only	.30
	81093	Speaker plug only	.20
67	81366	Field coil Model RL-309-A (400 ohm)	3.50
	81366	Field coil Models RL-309-A or RH-309-A (200 ohm)	3.50
68	81274	Diaphragm Assembly (Model R-309-A)	2.75
	81276	Diaphragm Assembly (Model RL-309-A)	2.75
	81279	Diaphragm Assembly (Model RH-309-A)	2.75
69	81346	Cord and plug	.40
70	81509	½ Meg. ½ watt resistor	.30

Miscellaneous Parts

61241	Felt Knob Washer	$0.01
67263	No. 6 Special screw for bottom	.20
67964	I. F. Short Tube Shield	.20
81007	Tube Shield Cover	.10
81011	Escutcheon Plate	.15
81012	Tube Shield Shell	.15
81099	Terminal Plug Cover	.10
81109	Small Rubber Drive Bushing	.05
81111	Large Rubber Drive Bushing	.05
81210	S. W. Coil Shield	.10
81212	I. F. Coil Shield	.10
81215	R. F. Coil Shield	.10
81252	Range Switch	.75
81268	Colored Dial Cord and Frame	.50
81701	Tone or Volume Control Knob	.10
81702	Large Tuning Knob	.15
81703	Range Switch Lever	.10

PLAINTIFFS' EXHIBIT NO. 93, Sheet 13,

SERVICE DATA for STEWART-WARNER 105 SERIES CHASSIS (RECEIVER MODELS 50 to 59)

CIRCUIT DESCRIPTION OF 105 RECEIVER

GENERAL:

The Model 105 Stewart-Warner Radio Receiver is an 11-tube ac wave receiver, using a double superheterodyne circuit, which thru the use of a multi-section range switch permits the use of any one of four tuning ranges or phonograph hook-up as desired.

CIRCUIT LAYOUT:

Thru the use of the range switch radio signals are made to follow one of two general circuit paths, depending on their wave lengths. If the signal is in the broadcast band, it is fed directly to the tuned input circuit of the R.F. tube, and from there on amplified in the usual way. During broadcast reception interference from short wave stations is prevented by applying a very high negative bias on the short wave oscillator tube, preventing it from functioning.

When the set is switched over to any one of the three short wave ranges, the following circuit changes are made:

1. The antenna is switched to the tuned input circuit of the short wave detector.
2. The bias on the short wave oscillator tube is reduced so that it can function.
3. The tuning condenser sections in the R.F., first detector, and broadcast oscillator stages are cut out of the circuit and replaced by fixed trimmer condensers which are adjusted to tune these circuits to pass a 1525 K.C. signal. This frequency is used to prevent pickup of broadcast band stations during short wave reception.

The received short wave signal passes thru the short wave detector, where it is converted to 1525 K.C. by the action of the short wave oscillator and it is then amplified at this frequency in the broadcast section of the receiver.

Input to the second detector tube is kept constant regardless of variation in signal strength by means of an A.V.C. circuit using a separate 37 tube. Volume is regulated by means of a variable resistor acting as a voltage divider to feed the primary of the input push-pull transformer.

EXPLANATION OF RANGE SWITCH:

The range switch consists of eight independent switch sections, each section being provided with five contacts. Ordinarily only seven sections of the eight, and only four contacts of the five per switch are used, the remainder being wired in on phonograph models only.

In the circuit diagram these different switch sections are labelled 1R, 1L, 2R, etc., and for the sake of simplicity are shown in different locations in the diagram, altho they are all parts of the master range switch assembly located in the center of the chassis. With the chassis bottom-side up and controls pointing away from you 1R is the front right hand section, 1L is the front left hand section, 2R is the second right-hand section counting from the front of the chassis, and so on.

Switch contact positions are arranged in the following order reading in a clockwise direction.

1. PHONOGRAPH. — This contact is used on phonograph models only. On all other sets, the switch lever cannot be moved to this position.
2. BROADCAST RANGE. — In non-phonograph models a stop has been placed to prevent the switch from turning on to Point No. 1 so that No. 2 is really the first switch position.
3. 180-80 METER SHORT WAVE RANGE.
4. 80-33 METER SHORT WAVE RANGE.
5. 33-14 METER SHORT WAVE RANGE.

As the range switch is rotated in a clockwise direction the following circuit changes are effected.

POSITION 1. Phonograph. (This position is available on phonograph models only.) Switch 1R grounds the aerial, while switch 4R biases the first detector to cut off, thus rendering it inoperative. These circuit changes prevent radio interference while the phonograph is being used. Switch 3L, which is wired in on phonograph models only, makes the necessary connections to bias the second detector as an amplifier instead of a detector.

POSITION 2. Broadcast [illegible]. (This is the first position in use on non-phonograph models.) In this position switch 2L biases the short wave oscillator to stop it from oscillating, so that the short wave section cannot cause interference when receiving stations on the broadcast band. Switch 1R connects the aerial to the primary of the R.F. coil. Switch 3R connects the third section of the variable condenser gang across the secondary of the R.F. coil. Switch 4R connects the fifth section of the variable condenser gang across the secondary of the first detector coil. Switch 4L connects the fourth section of the variable condenser gang across the secondary of the broadcast oscillator circuit. In phonograph models only, switch 3L connects the secondary of the second I.F. transformer directly to B minus.

POSITION 3. 180 to 80 Meter Short Wave Band. In this position switch 1R connects the aerial to one of the two tuned primaries of the short wave detector. Switch 3R connects the output of the short wave detector to the secondary of the R.F. coil, and also connects an adjustable trimmer condenser across the secondary of this coil to tune it to 1525 K.C. Switch 4R connects an adjustable trimmer across the secondary of the first detector coil to tune it to 1525 K.C. Switch 4L connects a variable trimmer across the secondary of the broadcast oscillator to tune it to 1702.5 K. C., thus giving an I.F. of 177.5 K.C. Switch 1L connects an adjustable padding circuit in series with the secondary of the short wave oscillator coil, thus permitting proper tracking of this circuit in this short wave band. In phonograph models only, switch 3L connects the secondary of the second I.F. transformer directly to B minus.

POSITION 4. 80 to 33 Meter Short Wave Band. In this position switch 1R connects the aerial to the second of the two primaries of the short wave detector coil. Switch 2R shorts out a portion of the secondary of the short wave detector coil, thus enabling it to tune to the 33 to 80 meter band. Connections to switches 3R, 4R and 4L remain the same as in position 3, tuning the R.F. section to 1525 K.C. Switch 1L connects a different adjustable padding circuit in series with the secondary of the short wave oscillator coil, thus permitting proper tracking of this circuit in this short wave band. Switch 2L shorts out part of the secondary of the short wave oscillator coil so that it will tune to wave lengths between 33 and 80 meters. In phonograph models only, switch 3L connects the secondary of the second I.F. coil directly to B minus.

POSITION 5. 33 to 14 Meter Short Wave Band. In this position switch 1R connects the aerial thru a tap to the second primary of the short wave detector coil. Switch 2R shorts out a larger section of the secondary of the short wave detector coil so that this circuit can be tuned from 14 to 33 meters. Connections thru switches 3R, 4R, 3L and 4L remain as in positions 3 and 4. Switch 1L connects a non-adjustable padding circuit in series with the secondary of the short wave oscillator coil. Switch 2L shorts out a larger portion of the secondary of the short wave oscillator coil, thus permitting this tuned circuit to cover the 14 to 33 meter band.

LOCAL-DISTANCE SWITCH:

The local-distance or "quiet" switch, which is operated by an in-and-out motion of the tone control knob, functions in the following manner. In the "in" or local position, the primary of the R.F. coil is shunted by a fixed condenser, thus by-passing part of the signal to ground and reducing the signal input into this circuit. The R.F. and I.F. tubes are operated at a high negative bias to reduce their amplification. In the "out" or distance position, the by-passing condenser is cut out of the circuit and a fixed resistor is connected in parallel with the bias resistor of the R.F. and I.F. tubes, thus reducing the bias on these tubes to its normal value, permitting them to operate at maximum sensitivity.

(Continued on last page)

SPEAKER:

Three different types of speakers are used with the 105 set.

(1) R-208-A. This is the standard model for single speaker receivers. Its field coil resistance is 460 ohms.

(2) RL-209-A. This is the LOW unit of a twin speaker set. Its field coil resistance is 230 ohms.

(3) RH-209-A. This is the HIGH unit of a twin speaker set. Its field coil resistance is 230 ohms.

Replacement diaphragms for RL-209-A and RH-209-A are marked 67208 and 81268 respectively.

POWER UNIT:

Altho the chassis are the same, different power units are used for the single and twin speaker sets. The twin speaker power unit has two speaker sockets instead of one, and a different output transformer, designed to handle two speakers.

ALIGNING THE MODEL 105 RECEIVER

There are five distinct circuits to be aligned in the 105 receiver. The order in which they are given below is the order in which they must be aligned.

(1) Intermediate Frequency Amplifier (177.5 K.C.)
(2) Broadcast Tuning Circuit (540-1550 K.C.)
(3) Short Wave Intermediate Frequency Amplifier (1525 K.C.)
(4) First Short Wave Circuit (180 to 80 meters)
(5) Second Short Wave Circuit (80 to 33 meters)

NOTE: The third short wave circuit requires no aligning since both condensers will be in step if short wave circuits (4) and (5) are properly aligned.

In aligning the Model 105 it is essential to use a high grade oscillator and a sensitive output meter. The R.F. signal fed

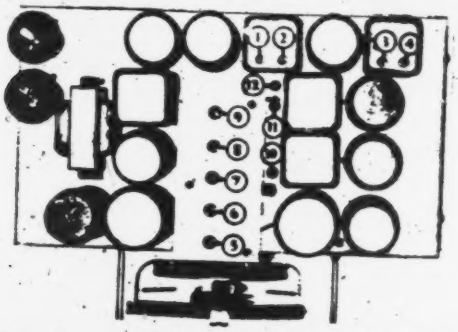

into the receiver must be very weak or it will cause the A.V.C. circuit to function, making correct alignment impossible. The output meter must be sufficiently sensitive to give a satisfactory reading with this low signal.

Before starting the alignment of the set, see that the volume control is full on, the local-distance switch pulled out, and the output meter connected to the pentode plates thru .25mfd. condensers, or to the voice coil of the speaker. The tone control should be turned all the way to the right. This last step is helpful in reducing the tube "shish" and makes aligning easier.

(1) ALIGNING THE I. F. CIRCUITS AT 177.5 K. C.

Remove the grid clip from the first detector tube and connect the two output terminals of the oscillator in series with the grid clip and grid cap of the tube. Set the oscillator to exactly 177.5 K.C. and adjust its output to give about one-half scale deflection of the output meter.

Carefully adjust the four I.F. trimmers Nos. 1, 2, 3 and 4 (see diagram) until output is at a maximum. After all four trimmers have once been adjusted, go back and readjust them again in the same order, since any change made in one affects the others to some extent so that readjustment is necessary. If any static is coming thru the receiver so that the output meter fluctuates, pull out the broadcast oscillator tube to prevent this interference from coming thru.

(2) ALIGNING BROADCAST R. F. CIRCUITS

In this, and all subsequent steps in alignment, remove the A.V.C. tube.

Before starting this alignment procedure, it is necessary to check the calibration of the set on the broadcast band, since this band must subsequently be used as a reference point in aligning the three short wave bands. This calibration check is very important. It can easily be done by disconnecting the test oscillator and tuning in some broadcast station between 1000 and 1400 K.C. whose frequency is definitely known.

If the dial reading of the set corresponds to the broadcast frequency of the station, the set is in calibration. If the dial reading is incorrect, turn the dial pointer to the proper frequency and carefully adjust trimmer No. 8 until the station is tuned in with maximum volume.

After the receiver is calibrated it must be aligned. To do this connect the test oscillator to the set aerial and ground terminals and set it to approximately 1400 K.C. Tune the set to this signal. Carefully adjust trimmers No. 7 and No. 9 for maximum output. Retune the set, which is thrown out of resonance when trimmers No. 7 and No. 9 are adjusted, and once more adjust these trimmers. Repeat this procedure until you are certain the output cannot be increased by further adjustment.

(3) ALIGNING SHORT WAVE I. F. AT 1525 K. C.

Adjust the test oscillator to exactly 1525 K.C. by setting the broadcast receiver to this frequency and tuning the oscillator until the signal comes thru with maximum volume. Now shift the tuning range of the set to the second short wave band (80 to 33 meters). Adjust the oscillator output to give about one-half full scale deflection. If static is bad, causing the output meter needle to jump about, remove the short wave oscillator tube.

Using a Bakelite screwdriver, adjust trimmers Nos. 10, 11 and 12 to give maximum output.

NOTE: It should never be necessary to adjust the following short wave circuits unless the short wave trimmers or coils have been changed or tampered with. Alignment procedure as a rule should not go beyond this point.

(4) ALIGNING 180-80 METERS SHORT WAVE BAND

The following alignment procedure is extremely critical. Tune the receiver to exactly 800 K.C. and adjust the output frequency of the test oscillator until its signal is a maximum at this frequency. Shift to the first short wave band of the set, and turn the pointer as far as it will go to the left. This tunes the set to 1600 K.C., which is the second harmonic of

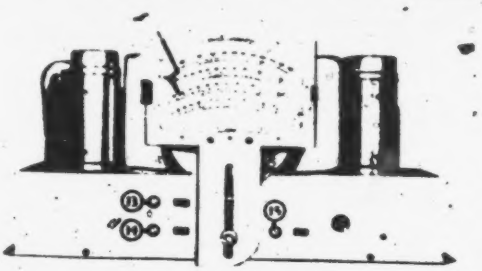

the test oscillator signal. Adjust trimmer No. 14 until this signal comes thru with maximum output.

Again using the calibrated broadcast band, set the test oscillator output to exactly 975 K.C., shift back to the first short wave band, and turn the pointer as far as it will go to the right. Adjust trimmer No. 5 until the oscillator signal (4th harmonic of 975 K.C.) is picked up with maximum output. If it has been necessary to change the adjustment of trimmer No. 5 appreciably, go back to trimmer No. 14 and adjust it again as outlined at the beginning of this section. This second readjustment is important.

(5) ALIGNING 80-33 METERS SHORT WAVE BAND

Set the test oscillator to exactly 925 K.C. using the method previously outlined for 800 K.C. and 975 K.C. Shift the tuning range of the set to the second short wave band (80-33 meters) and turn the pointer as far as it will go to the left. Adjust trimmer No. 13 until the fourth harmonic of the 925 K.C. signal comes thru with maximum output.

Set the test oscillator at 1500 K.C., using the method previously outlined. Tune in the signal at approximately 50 meters, which is the 4th harmonic of 1500 K.C. and adjust trimmers Nos. 6 and 15 until the oscillator signal comes thru with maximum output. Retune the set and readjust trimmers 6 and 15. Trimmer No. 15 is not at all critical in its action.

NOTE: It is very important that the aligning frequencies given in sections 3, 4 and 5 be exact, otherwise both the calibration and sensitivity, particularly at the third short wave band, will be badly off.

IN-407

PLAINTIFFS' EXHIBIT NO. 93 SHEET 15
(Blueprint marked IN-407)

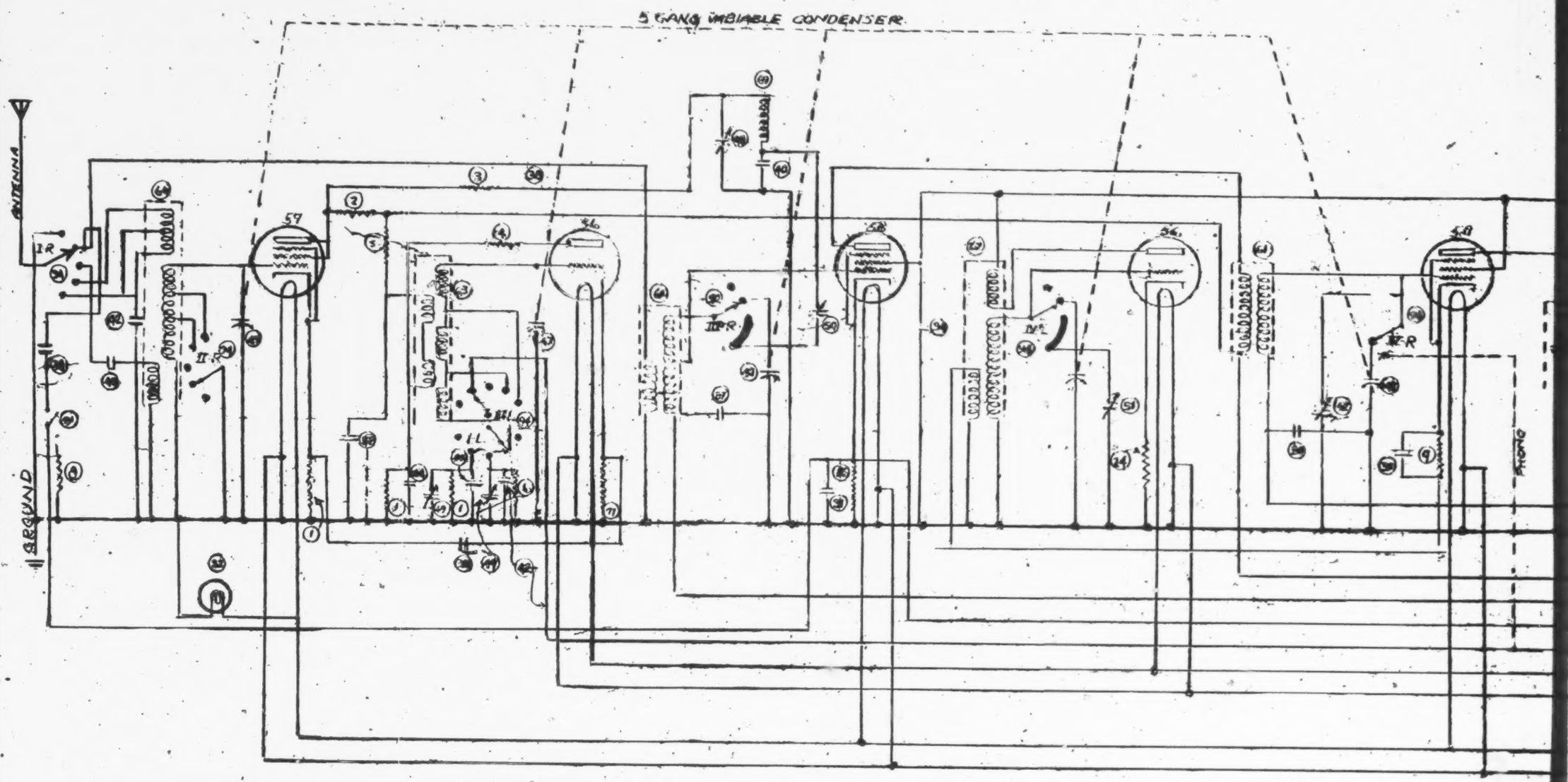

3-(1) 31152 18000W 1/2 WATT FIXED RESISTOR
1-(2) 8050 750000W 1/2 WATT FIXED RESISTOR
1-(3) 67550 6000W 1/4 WATT FIXED RESISTOR
1-(4) 67987 100W 1/2 WATT FIXED RESISTOR
3-(5) 81162 40000W 1 WATT FIXED RESISTOR
1-(6) 67253 45000W 1/4 WATT FIXED RESISTOR
1-(7) 67986 2000W 1 WATT FIXED RESISTOR
1-(8) 81153 150W 1 WATT FIXED RESISTOR
[illegible] 1/2 WATT FIXED RESISTOR

1-(36) G-81190 FIXED COND. 1-200V. WITH CLIP (USED ON PHONO)
1-(38) G-67294 FIXED COND. 1-200V. WITHOUT CLIP
2-(32) G-67296 FIXED COND. 1-400V. WITHOUT CLIP
1-(33) G-81191 FIXED COND. 1-400V. WITH CLIPS
3-(34) G-67297 FIXED COND. .25-200V. WITHOUT CLIP
1-(35) G-81345 FIXED COND. 125-200V. WITH CLIP (FOR PHONO ONLY)
1-(36) G-67299 FIXED COND. .02-400V. WITHOUT CLIP
1-(37) G-81572 FIXED COND. .05-200V. WITH CLIP
5-(38) 81156 FIXED COND. .001

1-(60) G-81189 "A" COIL ASSEM.
1-(61) G-81188 "B" COIL ASSEM.
1-(62) G-81406 "C" COIL ASSEM
1-(63) G-81178 BC. COIL ASSEM
1-(64) G-81179 DET. COIL ASSEM
1-(65) G-81236 1ST INTER. TRANS. ASSEM
1-(66) G-81331 2ND INTER. TRANS. ASSEM
1-(67) G-81276 INPUT TRANS. G-81272 COIL

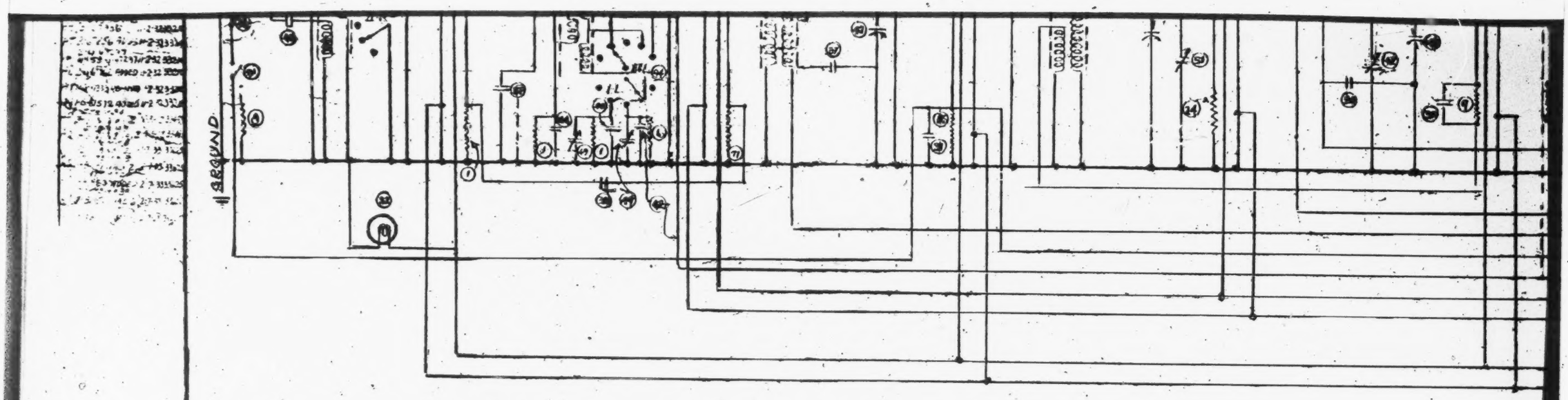

3-(1) 31152 18000Ω 1/2 WATT FIXED RESISTOR
1-(2) 8050 750000Ω 1/2 WATT FIXED RESISTOR
1-(3) 67590 6000Ω 1/4 WATT FIXED RESISTOR
1-(4) 67987 100Ω 1/2 WATT FIXED RESISTOR
3-(5) 81162 40000Ω 1 WATT FIXED RESISTOR
1-(6) 61253 45000Ω 1/4 WATT FIXED RESISTOR
1-(7) 67986 2000Ω 1 WATT FIXED RESISTOR
1-(8) 81153 150Ω 1 WATT FIXED RESISTOR
1-(9) 6451 4000Ω 1/2 WATT FIXED RESISTOR
1-(10) 67952 2.4 MEG 1/2 WATT FIXED RESISTOR
1-(11) 67100 20000Ω 1 WATT FIXED RESISTOR
1-(12) 81172 2000Ω 1/4 WATT FIXED RESISTOR (PHONO ONLY)
1-(13) 67933 100000Ω 1 WATT FIXED RESISTOR
1-(14) 67260 50000Ω 1/4 WATT FIXED RESISTOR (PHONO ONLY)
1-(15) 81429 1200Ω 1 WATT FIXED RESISTOR
(16) OPEN CIRCUIT AT THIS POINT (FOR PHONO ONLY.)
1-(17) 81205 BLEEDER REGISTOR
1-(18) 81419 VOL CONTROL 60000Ω
2-(19) 67256 75,000Ω 1/2 WATT FIXED RESISTOR
(20) 1- 91131 FIXED REGISTOR 120Ω CENTER TAP
(21) 91131 FIXED RESISTOR 220Ω
1-(22) 91457 TONE CONTROL 100,000Ω
1-(23) 81509 5000Ω 1/2 WATT FIXED RESISTOR
1-(24) 81829 1500 1/4 WATT FIXED RESISTOR

1-(30) G-81190 FIXED COND. .1-200V. WITH CLIP (USED ON PHONO)
1-(31) G-67294 FIXED COND. .1-200V. WITHOUT CLIP
2-(32) G-67296 FIXED COND. .1-400V. WITHOUT CLIP
1-(33) G-81191 FIXED COND .1-400V WITH CLIPS
3-(34) G-67297 FIXED COND. .25-200V. WITHOUT CLIP
1-(35) G-81345 FIXED COND. .125-200V. WITH CLIP (FOR PHONO ONLY)
1-(36) G-67299 FIXED COND. .02-400V. WITHOUT CLIP
1-(37) G-81572 FIXED COND. .05-200V. WITH CLIP
5-(38) 81156 FIXED COND. .001
1-(39) G-81345 FIXED COND. .002 WITHOUT CLIP
3-(40) 81155 FIXED COND. .0005
1-(41) 81157 FIXED COND. .00025
2-(42) 81158 FIXED COND. .0001
1-(43) G-67262 FIXED COND. .05-200V. WITHOUT CLIP
1-(44) 81282 FIXED COND. .002
1-(45) 81081 FIXED COND .5-400V.
1-(46) 81443 FIXED COND .1-100V.
1-(47) 81000 VARIABLE CONDENSER
1-(48) G-81346 TRIMMER ASSEM. (S.W.)
1-(49) G-81231 TRIMMER ASSEM (S.W.)
1-(50) G-81202 TRIMMER ASSEM. (SINGLE)
(51) G-81201 TRIMMER ASSEM (DOUBLE) FRONT
(52) G-81201 TRIMMER ASSEM (DOUBLE) REAR
1-(53) G-81345 FIXED CONDENSER .02 400V WITH CLIPS

1-(60) G-81189 "A" COIL ASSEM.
1-(61) G-81188 "B" COIL ASSEM.
1-(62) G-81406 "C" COIL ASSEM
1-(63) G-81178 BC COIL ASSEM
1-(64) G-81179 DET. COIL ASSEM
1-(65) G-81236 1ST INTER. TRANS. ASSEM
1-(66) G-81331 2ND INTER. TRANS. ASSEM
1-(67) G-81276 INPUT TRANS. & ANT. COIL
(68)
1-(69) G-81385 UNIVERSAL WAND COIL

CAUTION

SHEET

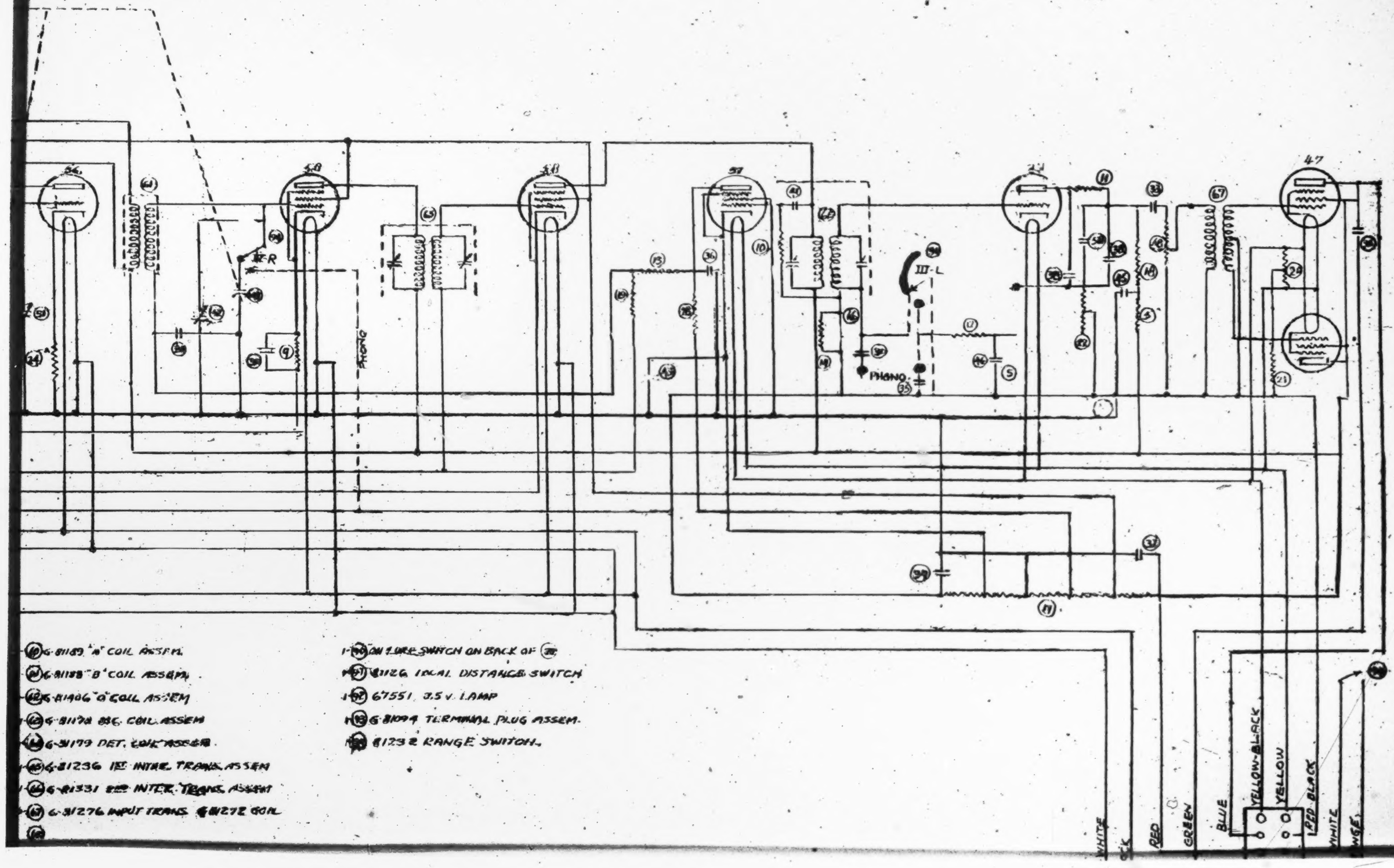

(60) G-81189 "A" COIL ASSEM.
(61) G-81188 "B" COIL ASSEM.
(62) G-81406 "O" COIL ASSEM
(63) G-81178 BSC. COIL ASSEM
(64) G-81179 DET. COIL ASSEM.
(65) G-81236 1ST INTER. TRANS. ASSEM
(66) G-81331 2ND INTER. TRANS. ASSEM
(67) G-81276 INPUT TRANS. G81272 COIL
(68)

(90) ON FURE SWITCH ON BACK OF (38)
(91) 81126 LOCAL DISTANCE SWITCH
(92) 67551 3.5 V. LAMP
(93) G-81094 TERMINAL PLUG ASSEM.
(94) 81232 RANGE SWITCH.

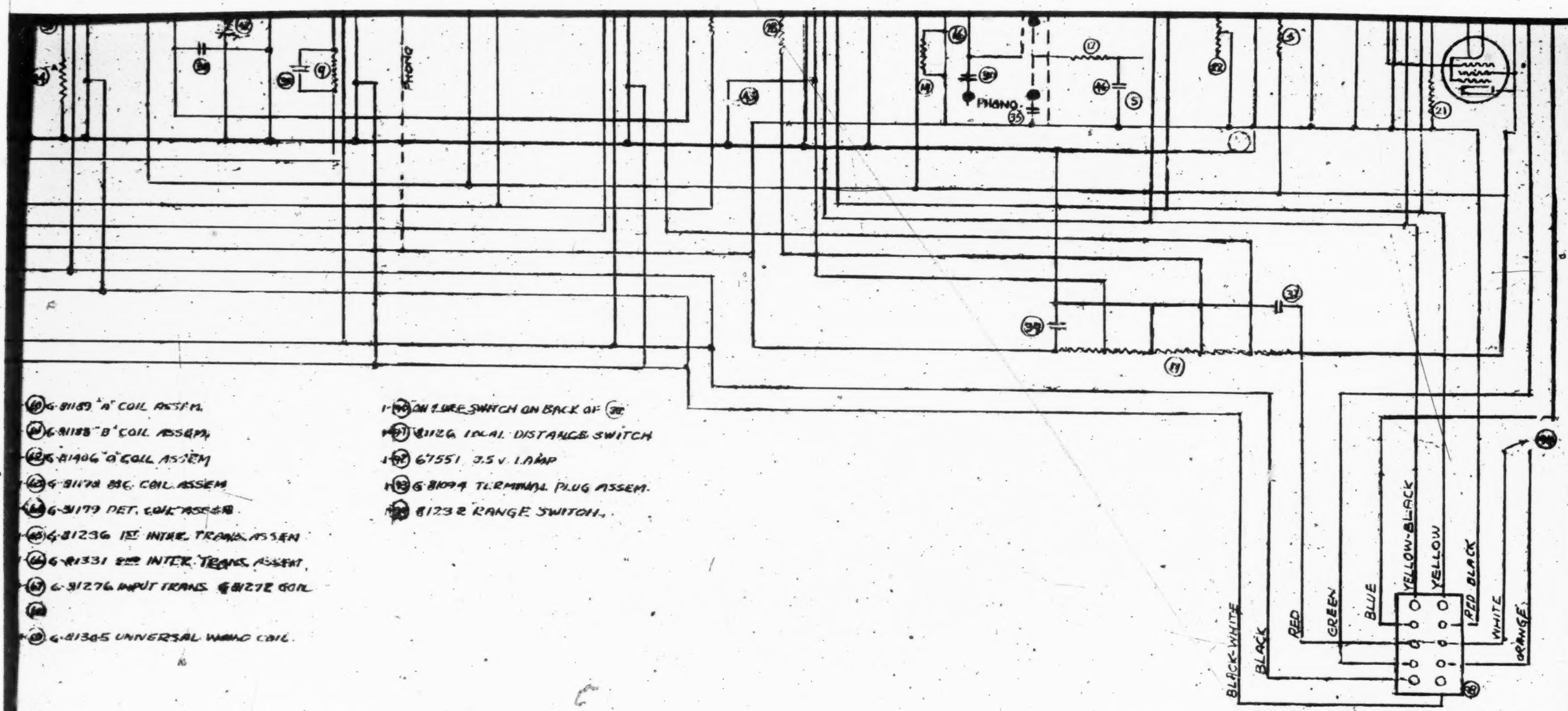

(60) G-81189 "A" COIL ASS'M.
(61) G-81188 "B" COIL ASSEM.
(62) G-81406 "C" COIL ASS'M
(63) G-81178 B&C COIL ASSEM
(64) G-81179 DET. COIL ASSEM
(65) G-81236 1ST INTER. TRANS. ASSEM
(66) G-81331 2ND INTER. TRANS. ASSEM.
(67) G-81276 INPUT TRANS. & 81278 COIL
(68)
(69) G-81305 UNIVERSAL WIRING COIL.

1-(70) ON TUNE SWITCH ON BACK OF (71)
1-(71) 81126 LOCAL DISTANCE SWITCH
1-(72) 67551 3.5 V. LAMP
1-(73) G-81094 TERMINAL PLUG ASSEM.
1-(74) 81232 RANGE SWITCH.

G-81472	60W SPEC. VOLT	MODEL	R-105-EF
G-81471	25W 115V	MODEL	R-105-BE
G-81470	60W 115V	MODEL	R-105-AF
G-81355	60W SPEC. VOLT	MODEL	R-105-ETF
G-81354	25W 115V.	MODEL	R-105-BTF
G-81353	60W 115V.	MODEL	R-105-ATF
G-81357	25W 115W	MODEL	R-105-BT
G-81356	60W 115W	MODEL	R-105-AT
G-81351	25W 115V.	MODEL	R-105-B
G-81350	60W 115V.	MODEL	R-105-A
CHASSIS	TYPE OF CHASSIS	USED ON	NO

STEWART-WARNER CORPORATION, CHICAGO, U. S. A.

NAME CIRCUIT DIAGRAM (REC. MECH. ASSEM.)
NUMBER IN 407

PLAINTIFFS' EXHIBIT No. 93, Sheet 16,

INSTRUCTIONS

FOR

STEWART-WARNER

SERIES 50

RADIO RECEIVERS

(CHASSIS 105-A, B and E)

WHAT TO EXPECT FROM YOUR STEWART-WARNER RADIO RECEIVER

Your new Stewart-Warner All-Wave Duo-Superheterodyne is the most modern development in radio reception, for it combines all that is new with the old in radio.

All-Wave reception offers two distinctly different types of radio entertainment: First, the reliable every day reception of broadcast programs; and second, the thrills of direct reception from foreign countries, the excitement of police calls and airplane communications, and the kick of listening to transatlantic phone conversation, television, experimental broadcasts in endless variety, and amateurs discussing their trials and tribulations in their own peculiar jargon. When you sit down to your receiver you never know what thrill short wave reception will bring to your home, for the short wave stations you heard so clearly yesterday or the day before may now be inaudible and superseded by others offering an entirely different variety of entertainment.

Naturally, you want to derive the greatest possible benefit from this new radio thrill—short wave reception—but in order to do so it is absblutely necessary that you carefully read the guides to short wave reception that follow.

Many people take it for granted that because the same tuning controls are used for both broadcast and short wave reception there are no differences between these two types of reception—such is not the case.

Short wave reception presents many peculiarities not encountered in the reception of longer wave programs, and it is necessary for even the experienced operator of broadcast sets to become thoroughly familiar with the many differences, both in reception and tuning experienced when operating a short wave set. While we cannot discuss in detail all of these differences, we will cover briefly the most important ones in the following pages.

TUNING FOR SHORT WAVES IN THE CORRECT PORTIONS OF THE DIAL

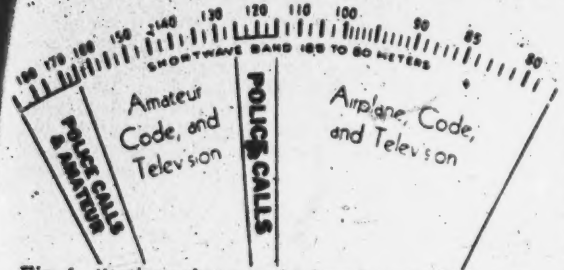

Fig. 1. Stations that may be found on the 80 to 200 meter short wave band.

Fig. 2. Stations that may be found on the 33 to 80 meter short wave band.

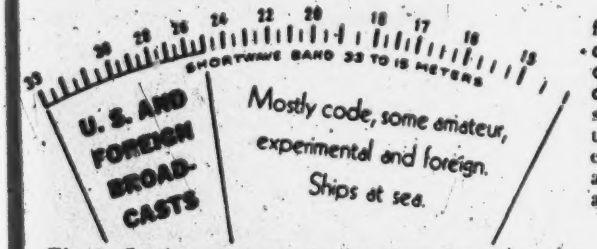

Fig. 3. Stations that may be found on the 15 to 33 meter short wave band.

In the broadcast band there are 96 station channels and one or more stations send out programs on every one of them so that it is an easy matter to pick up stations at will. **The short wave band has twenty times as many, or 1900, station channels and only a small number of them contain programs of interest to the average listener.**

These channels are grouped into compact bands at a few definite points on the dial so that a large portion of the total dial space has no entertainment value, being restricted to code. Because of the relatively wide spaces between entertainment bands, many people spend a large proportion of their time uselessly hunting for interesting short wave programs where none can be found.

You are most likely to find entertaining programs on the underlined portions of the three short wave dials. Do most of your short wave tuning in these underlined portions. However, stations may be found at some time or other on any portion of the dial.

Figures 1, 2, and 3 illustrate the three short wave dials, indicating the types of programs that may be tuned in at the various wave lengths. The entertaining programs are indicated in bold type and correspond to the underlined portions of the dials.

CHOOSING THE BEST WAVE LENGTHS FOR THE TIME OF DAY

Short wave reception on certain wave lengths is frequently more satisfactory during the day than at night, while on the other wave lengths the reverse is true. It will, therefore, be found that short wave stations operating on some wave lengths, will come in during the day only, while others will not come in until after sunset. For example, 15 to 33 meter stations operating to the east of the listener come in best from about 11:00 A. M. to 10:00 P. M., while stations to the west come in best from about midnight until shortly after daybreak.

From 33 to 70 meters, distant stations can be heard only after dark. Very little in the way of extreme distance can be heard above 70 meters, although commercial stations such as police, fire, coast-guard, aircraft, and ships are all above this wave length.

In addition to this difference in reception depending upon directions, the difference in time in various parts of the globe must be taken into consideration. For example, when it is 5:00 P. M. in Chicago, it is midnight in England and 1:00 A. M. in most of Europe, at which time their broadcast stations are off the air. **Consequently tuning for European stations must be attempted during the afternoon.**

Moreover, U. S. short wave stations rarely start broadcasting before 1:00 o'clock in the afternoon, so that the air is almost always silent during the morning.

Failure to take these facts into consideration leads to much useless tuning and resultant dissatisfaction.

GETTING DISTANCE ON SHORT WAVES

Because of the wide interest in reception from extremely distant points, a good deal of exaggeration has attended the claims generally made for short wave reception. Some idea of the difficulties encountered in extreme distance reception is obtained when one considers the fact that, in the broadcast band the reliable working range of a 50,000 watt super-power broadcast station is only 150 miles. This is the maximum distance over which satisfactory reception can be assured, **24 hours in the day.** Of course, we know that such stations often cover ranges in the thousands of miles, but such reception cannot be consistently secured.

The set owner who has this information realizes the unreasonableness of expecting short wave stations with limited powers of only 100 to 1000 watts to provide consistent and satisfactory reception at points thousands of miles away. It is true that low power short wave broadcasts will cover many times the distance of similar broadcasts transmitted on long wave lengths, as is evidenced by the fact that for long distances, satisfactory daylight reception can be secured on the short wave broadcasts of such well known stations as KDKA, WGY, WENR and WLW at locations where their main broadcasts, using many times the power, cannot be heard at all. The important point to remember, however, is that **extreme ranges cannot be counted upon day in and day out.** For example, foreign reception has been realized at many locations situated all over the country, but such reception is highly variable, coming in with excellent volume one day and very poorly, if at all, the next.

PLAINTIFF'S EXHIBIT NO. 93, Sheet 17, 412-413

VARIABLE NATURE OF SHORT WAVE RECEPTION

Set owners must realize that short wave reception varies greatly, depending upon such factors as location of the receiver, time of day, and season of the year. Quite frequently satisfactory short wave reception is obtained in one location, while with similar receiving equipment located only a mile or so away, the same signal cannot even be detected. Fifteen minutes later conditions may be reversed, and the second location secure good reception while the first does not. Such variations are at their worst when distances are extreme, as in the case of foreign reception.

It is frequently possible to receive signals from extremely distant stations, while signals from much nearer stations may not come in at all. This phenomena is known as "skip distance effect" and is frequently encountered on extremely short waves.

Short wave stations also change in volume from time to time, these changes being brought about largely by the amount of daylight between transmitter and receiver. For example, European stations are always best for American listeners during the summer months, while South American stations come in best during the winter.

Fading or fluctuation of volume is also quite common on short waves. Unlike the fading experienced with the longer wave lengths it is very rapid; stations, on occasion, fading in and out several times in one second. In extreme cases fading may be so rapid as to give a peculiar fluttering quality to the music.

IMPORTANCE OF CAREFUL TUNING ON SHORT WAVES

Although the reception of foreign short wave broadcasting stations is no longer an unusual experience for thousands of radio listeners, there are still many owners of short wave receivers who have never heard anything outside of the United States or Canada. Their disappointing failures can almost invariably be traced to their failure to exercise enough care in tuning their sets.

The tuning in of short wave programs is quite critical, and the usual careless turning of the tuning dial that is sufficient to bring in broadcast stations will inevitably fail in short wave reception. Stations may be brought in and tuned out again in but a fraction of a dial division, and unless all tuning instructions are painstakingly followed to the letter, distant stations will invariably be passed by. Some idea of the care required in tuning a short wave receiver may be obtained when one considers that in the one meter band between 49 and 50 meters there are more than twelve full width transmitting channels. This means that unless the tuning knob is turned very slowly most of the short wave stations will be passed by completely.

INTERFERENCE IN SHORT WAVE RECEPTION

Although true static is almost non-existent on short waves, electrical interference set up by the operation of electric machinery is much more severe. Short wave receivers are so sensitive to this type of interference that it is frequently possible to pick up the disturbances caused by the ignition system of a passing automobile.

GENERAL CAUTIONS

Because of the factors we have but briefly touched here, it will require considerable experience and practice before the operator becomes familiar with the possibilities of short wave reception and can tell, by the time of day or season of the year, which short wave band is the most likely to provide best results. Therefore, he should not become discouraged if he does not at once realize the full potentialities of short wave reception.

Due consideration given to the above information and strict adherence to the operating instructions which follow, will materially shorten the time necessary to master the art of short wave tuning.

GENERAL INFORMATION ON BROADCAST RECEPTION

NOISES IN RECEPTION:

Most of the frying or crackling noises heard in a radio receiver when the volume control is well advanced are due to electrical discharges in the atmosphere (known as static) or the operation of electrical machinery in the neighborhood of the set. Such interference may be caused by any motor-driven device, such as a vacuum cleaner, vibrator, etc., since the brushes of electric motors invariably cause a good deal of sparking, or it may be a flashing electric sign an X-ray or violet ray machine, an oil burner, an electric refrigerator, a neon sign, traffic control signal, or similar device. It may even be caused by loose contact of an electric bulb or iron in its socket. Electric heating pads, due to their use of an automatic make and break mechanism for regulating temperature are particularly prone to cause such trouble. Noise from these devices may be encountered even though the offending device may be located in a neighbor's home at some distance from the receiver.

Both natural and man-made static are picked up by the aerial and ground systems, as can readily be shown by disconnecting both aerial and ground wires from the set, thus causing the noise to disappear. If the noise interferes too greatly with reception and is not due to atmospheric disturbances as evidenced by reception in neighboring sets a thorough investigation of electrical machinery in the immediate neighborhood is advised, or the matter should be taken up with your radio dealer or the local electric power company. A noise which continues when the aerial and ground are disconnected is probably due to a defective tube or poor connection in the set.

Most noise picked up by the receiver, whether due to static or the operation of electrical apparatus or machinery, is made up very largely of the higher notes. If, therefore, the tone control of the receiver is turned to the right to produce deeper, more mellow music, the effect of noise on radio reception is greatly minimized. This is an important point to bear in mind since the proper use of the tone control may mean all the difference between enjoying a good program and listening to a succession of static crashes.

PLACING THE RECEIVER FOR BEST TONE:

The location of the set itself has much to do with the quality of music it will provide. If it is placed in a large bare room with no rugs, the sound waves proceeding from it will be reflected from the floors and cause a noticeable loss of tone quality. Fortunately, the average living room has most of its large reflecting surfaces deadened or broken up by rugs, furniture, and curtains, so that reception is normal.

PLAINTIFFS' EXHIBIT NO. 93, Sheet 18, 414 - 415

c coming from a radio set sounds much more pleasing to those in than to one side of the speaker, and therefore, the set should face m.

me at which a set is operated also affects its tone. Best results will when the volume of the radio receiver is about the same as the sic being broadcast. If the volume is reduced appreciably below this lower tones will tend to drop out, giving the music a higher, more On the other hand, if the set is turned full on the lower tones are sized.

t a tone control it is impossible to compensate for this apparent lack lance. However, this change in tone value may be easily rectified rrect use of the tone control. For low volume the tone control may toward the right to help the bass notes, while for great volume, the ol should be turned toward the left to bring out the high notes and the over-emphasis of the bass so that the same realistic reproduction ed at all volume levels.

ANTENNA SYSTEM

ould have a good **outside** aerial for your all-wave receiver. Although erial will usually give very satisfactory reception of broadcast stations, e relied upon for good short wave reception.

st satisfactory aerial for any particular installation will vary widely locations, depending largely upon local structural details and sources nce.

recting the aerial always bear in mind the fact that the volume and of a set are largely governed by the length of the antenna system.

length of the aerial is increased, the volume of distant stations will d, but the selectivity of the set will be decreased. At the same time will become noisier, as a long aerial picks up more interference tely.

be remembered that in some cases a shorter antenna will bring in ns than a very long one, as the increased selectivity permits reception rference from nearby stations.

st suitable aerial for use in large cities or congested radio districts ference is a serious problem is one whose total length, including rom thirty to sixty feet. In rural sections where no interference is d volume is of extreme importance, a total length of 80 to 150 feet .

wing are a few general ideas to be kept in mind when installing an nna.

l proper should consist of copper wire insulated at each end with celain or glass insulator.

ng the aerial, be sure it is kept as far as possible from buildings, her obstructions. Do not run it alongside of electric light wires, any metallic structure.

aerial for general use is a single wire erected as high as possible. erial will have less directional properties and less tendency to pick e interference than a low aerial with a long horizontal lead. The d come to the set by the most direct route, and should be kept he side of the building by porcelain knobs. **It must be securely e aerial.**

INSTALLATION OF GROUND

Since the ground is an essential part of the aerial system, as much care must be taken in securing a good ground as in erecting a good aerial.

In a great number of installations a satisfactory ground can be made by connecting to a cold water pipe. This connection should be made by soldering the wire directly to the pipe or by some approved form of ground clamp. The pipe should be thoroughly cleaned and all paint and corrosion removed at the point at which the connection is made. Radiators may also be used for grounds, but do not always give good results, particularly steam radiators, since they are frequently insulated from ground by non-metallic expansion joints.

HOW TO CONNECT THE SET

Before connecting up the set, be sure that your home is supplied with the voltage and current for which it is designed, as indicated on the name plate on the rear of the chassis. If you are in doubt, call up your local power company for the necessary information. Connecting the set to a supply outlet furnishing the wrong type of current will result in improper operation or damage.

Your radio receiver is designed to operate at 115 volts. If the voltage in your home rises above 120 volts, you should purchase from your radio dealer a suitable voltage regulator to reduce the line voltage to the proper value so that your radio tubes will give you satisfactory service.

Installation of the set can best be accomplished in the following manner:

1. Remove the set from packing carton or crate.

2. Remove the packing material holding the tubes in position. Note that some of the tubes have small clips making contact with a cap at the top of the tube. **Be sure the metal clips do not touch the tube shields.**

3. **Loosen the four bolts holding down the set until their heads no longer touch the shelf. Also make sure the knobs do not touch the front panel.**

4. Connect the aerial to the long blue wire you find in back of the set.

5. Connect the ground to the black wire.

6. Plug the extension cord of the set into the most convenient outlet. It is now ready for operation.

TUNING INSTRUCTIONS

Before you can tune your radio receiver, you must first get a clear picture of the purpose of the four controls. These are all illustrated in Fig. 4 on the next page.

1. The knob to the left operates the volume control. Once this is set to give you the desired volume, it need hardly be touched again, since all stations within reach of the set will come in with almost the same volume because of the automatic volume control built into the receiver.

2. The center knob is the **two-speed** tuning control. When this knob is pulled out it connects in the slow-motion tuning control which is required for the extremely fine tuning of short wave stations. When this knob is pushed in, it connects in a rapid action tuning control which is used for broadcast reception, or to pass quickly from one end of the dial to the other when in the short wave ranges. This knob should always be pulled out or pushed in **with a slight twisting motion** to reduce wear on the tuning drive.

PLAINTIFFS' EXHIBIT NO. 93, Sheet 19, 708 419—417

The music coming from a radio set sounds much more pleasing to those in front, rather than to one side of the speaker, and therefore, the set should face into the room.

The volume at which a set is operated also affects its tone. Best results will be obtained when the volume of the radio receiver is about the same as the original music being broadcast. If the volume is reduced appreciably below this value, the lower tones will tend to drop out, giving the music a higher, more reedy tone. On the other hand, if the set is turned full on the lower tones are over-emphasized.

Without a tone control it is impossible to compensate for this apparent lack of tone balance. However, this change in tone value may be easily rectified through correct use of the tone control. For low volume the tone control may be turned toward the right to help the bass notes, while for great volume, the tone control should be turned toward the left to bring out the high notes and counteract the over-emphasis of the bass so that the same realistic reproduction is maintained at all volume levels.

ANTENNA SYSTEM

You should have a good **outside** aerial for your all-wave receiver. Although an indoor aerial will usually give very satisfactory reception of broadcast stations, it cannot be relied upon for good short wave reception.

The most satisfactory aerial for any particular installation will vary widely in different locations, depending largely upon local structural details and sources of interference.

When erecting the aerial always bear in mind the fact that the volume and selectivity of a set are largely governed by the length of the antenna system.

As the length of the aerial is increased, the volume of distant stations will be increased, but the selectivity of the set will be decreased. At the same time reception will become noisier, as a long aerial picks up more interference proportionately.

It must be remembered that in some cases a shorter antenna will bring in more stations than a very long one, as the increased selectivity permits reception without interfefence from nearby stations.

The most suitable aerial for use in large cities or congested radio districts where interference is a serious problem is one whose total length, including lead-in, is from thirty to sixty feet. In rural sections where no interference is obtained and volume is of extreme importance, a total length of 80 to 150 feet may be best.

The following are a few general ideas to be kept in mind when installing an outside antenna.

The aerial proper should consist of copper wire insulated at each end with a glazed porcelain or glass insulator.

In erecting the aerial, be sure it is kept as far as possible from buildings, trees and other obstructions. Do not run it alongside of electric light wires, a tin roof, or any metallic structure.

The best aerial for general use is a single wire erected as high as possible, as such an aerial will have less directional properties and less tendency to pick up power line interference than a low aerial with a long horizontal lead. The lead-in should come to the set by the most direct route, and should be kept away from the side of the building by porcelain knobs. **It must be securely soldered to the aerial.**

INSTALLATION OF GROUND

Since the ground is an essential part of the aerial system, as much care be taken in securing a good ground as in erecting a good aerial.

In a great number of installations a satisfactory ground can be made connecting to a cold water pipe. This connection should be made by solde the wire directly to the pipe or by some approved form of ground clamp. pipe should be thoroughly cleaned and all paint and corrosion removed at point at which the connection is made. Radiators may also be used for grou but do not always give good results, particularly steam radiators, since t are frequently insulated from ground by non-metallic expansion joints.

HOW TO CONNECT THE SET

Before connecting up the set, be sure that your home is supplied with voltage and current for which it is designed, as indicated on the name pl on the rear of the chassis. If you are in doubt, call up your local power compa for the necessary information. Connecting the set to a supply outlet furnishi the wrong type of current will result in improper operation or damage.

Your radio receiver is designed to operate at 115 volts. If the voltage your home rises above 120 volts, you should purchase from your radio dea a suitable voltage regulator to reduce the line voltage to the proper value that your radio tubes will give you satisfactory service.

Installation of the set can best be accomplished in the following manner:

1. Remove the set from packing carton or crate.

2. Remove the packing material holding the tubes in position. Note th some of the tubes have small clips making contact with a cap at the top of t tube. **Be sure the metal clips do not touch the tube shields.**

3. **Loosen the four bolts holding down the set until their heads no long touch the shelf. Also make sure the knobs do not touch the front panel.**

4. Connect the aerial to the long blue wire you find in back of the set.

5. Connect the ground to the black wire.

6. Plug the extension cord of the set into the most convenient outlet. It now ready for operation.

TUNING INSTRUCTIONS

Before you can tune your radio receiver, you must first get a clear picture the purpose of the four controls. These are all illustrated in Fig. 4 on t next page.

1. The knob to the left operates the volume control. Once this is set give you the desired volume, it need hardly be touched again, since all statio within reach of the set will come in with almost the same volume because the automatic volume control built into the receiver.

2. The center knob is the **two-speed** tuning control. When this knob pulled out it connects in the slow-motion tuning control which is required f the extremely fine tuning of short wave stations. When this knob is pushed i it connects in a rapid action tuning control which is used for broadcast receptio or to pass quickly from one end of the dial to the other when in the short wa ranges. This knob should always be pulled out or pushed in **with a slight twistin motion** to reduce wear on the tuning drive.

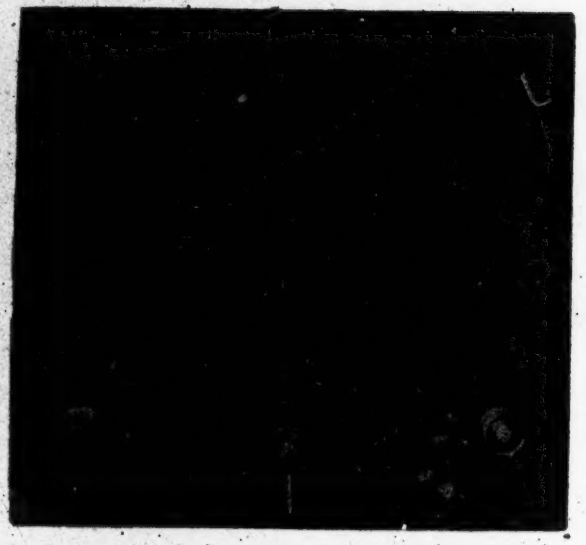

Volume Control — Range Selector — Tuning Control

1. On-Off Switch
2. Local-Distance
3. Tone Control

Fig. 4. Tuning Controls.

The right hand knob has three uses: (a) When turned slightly to the t turns the set on; (b) when turned further to the right it operates as control; (c) when pushed in the set will receive local stations only and the between stations will be cut out completely. For distance reception, this s pulled out.

The range selector lever is used to switch from one tuning range to r.

TUNING THE SET

Before tuning the set, be sure that the right hand control knob is out.

Turn the set on by rotating the right hand control knob to the right t far enough to allow the switch to snap on. Turning the knob further s the tone control, which should not be adjusted until later.

Turn the volume control (left hand knob) about half way to the right.

Wait a few seconds for the tubes to warm up. There should be a slight g or rushing sound coming from the speaker to indicate the set is ready ration. If the crackling sound is not heard, turn the volume control toward the right; if it is too loud, turn it to the left.

5. By means of the range selector lever, switch over to the wave length range you wish to hear. Be sure that this lever clicks definitely into the correct position before proceeding further. If it is left a little to either side of the correct position, interference may result.

6. Now turn the center tuning control slowly to bring in stations. You will notice that each station occupies a certain amount of space on the dial in which its volume remains fairly constant. Move the tuning pointer back and forth to determine the width of this space, and then finally set the pointer exactly in the center. This point will give you the best tone quality with full representation of all the deep bass notes. Although it will be possible to obtain somewhat greater volume on either side of this correct tuning point, particularly on local stations, the tone will be harsh and shrill, accompanied by hissing and crackling noises.

This tuning action, which is obtained with all automatic volume control receivers, is quite different from the tuning of radio receivers not having this feature. It is, therefore, highly important to tune the set very carefully, going up and back through the station at least once or twice to be sure that you stop at exactly the point that gives the deepest, richest tone quality. This will require a little practice at first, as the tendency will be to stop tuning too soon, or to tune a little to either side of the correct point, since this results in slightly greater volume, even though tone quality is poorer. The point to remember is that you must tune for the lowest tone and NOT for the greatest volume.

For local reception, it will be much easier to tune to the correct point if the right hand knob is pushed in.

7. When tuning in any of the short wave ranges, you will usually find that programs of interest will be obtained on those sections of the dial that are underlined. The other portions of the three short wave ranges are mainly restricted to code or commercial use, but an occasional short wave broadcast may be picked up in it.

Figs. 1, 2 and 3 on page 2 illustrate the three short wave ranges and will give you some idea of what type programs may be obtained at any part of the dial.

8. After the desired station is tuned in correctly, the tone control may be adjusted to suit the indivdual requirements of the listener. **With the tone control all the way to the left, music is reproduced with the greatest clarity and faithfulness to the original.** As this control is turned toward the right, the lower tones receive more and more emphasis, so that the music takes on an apparently deeper pitch. The best setting for the tone control depends entirely upon the personal preference of the listener.

In addition to regulating tone; the tone control has a very important function in reducing static and those interference noises created by the operation of electrical machinery. As it happens, these crackling and frying noises are very largely composed of the higher tones, so that turning the tone control toward the right reduces this interference to a very great extent.

9. As a result of the automatic volume control action of the receiver, its sensitivity increases as you tune away from a station so that the static noises always present in the air increase at the same time. This accounts for the crackling and frying noises heard between stations when the right hand knob is pulled out.

If you are listening to local stations only, it is best to push the right hand knob in. This not only eliminates noise between stations, but renders tuning very much easier.

PLAINTIFFS' EXHIBIT NO. 93, Sheet 20.
418-
2709

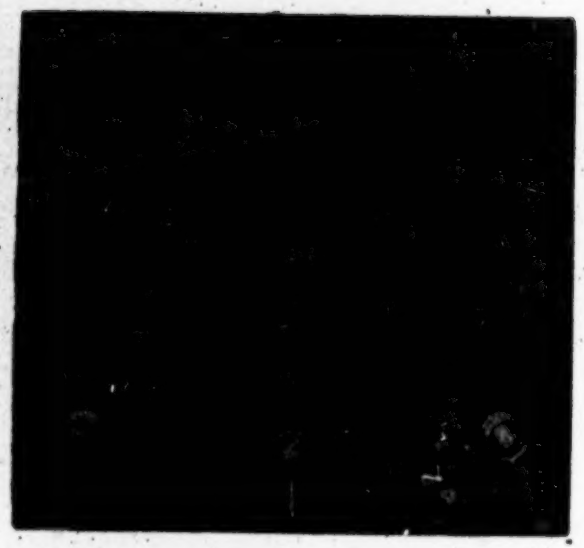

Volume Control | **Range Selector** | **Tuning Control**

1. On-Off Switch
2. Local-Distance
3. Tone Control

Fig. 4. Tuning Controls.

3. The right hand knob has three uses: (a) When turned slightly to the right it turns the set on; (b) when turned further to the right it operates as a tone control; (c) when pushed in the set will receive local stations only and the noise between stations will be cut out completely. For distance reception, this knob is pulled out.

4. The range selector lever is used to switch from one tuning range to another.

TUNING THE SET

1. Before tuning the set, be sure that the right hand control knob is pulled out.

2. Turn the set on by rotating the right hand control knob to the right **only just far enough to allow the switch to snap on.** Turning the knob further operates the tone control, which should not be adjusted until later.

3. Turn the volume control (left hand knob) about half way to the right.

4. Wait a few seconds for the tubes to warm up. There should be a slight crackling or rushing sound coming from the speaker to indicate the set is ready for operation. If the crackling sound is not heard, turn the volume control further toward the right; if it is too loud, turn it to the left.

5. By means of the range selector lever, switch over to the wave range you wish to hear. Be sure that this lever clicks definitely into the position before proceeding further. If it is left a little to either side correct position, interference may result.

6. Now turn the center tuning control slowly to bring in stations. Y notice that each station occupies a certain amount of space on the dial in its volume remains fairly constant. Move the tuning pointer back and to determine the width of this space, and then finally set the pointer e in the center. This point will give you the best tone quality with full repre tion of all the deep bass notes. Although it will be possible to obtain som greater volume on either side of this correct tuning point, particularly on stations, the tone will be harsh and shrill, accompanied by hissing and crac noises.

This tuning action, which is obtained with all automatic volume co receivers, is quite different from the tuning of radio receivers not having feature. It is, therefore, highly important to tune the set very carefully, up and back through the station at least once or twice to be sure that you at exactly the point that gives the deepest, richest tone quality. This will re a little practice at first, as the tendency will be to stop tuning too soon, tune a little to either side of the correct point, since this results in slightly gr volume, even though tone quality is poorer. The point to remember is that must tune for the lowest tone and NOT for the greatest volume.

For local reception, it will be much easier to tune to the correct point if right hand knob is pushed in.

7. When tuning in any of the short wave ranges, you will usually find programs of interest will be obtained on those sections of the dial that underlined. The other portions of the three short wave ranges are m restricted to code or commercial use, but an occasional short wave broad may be picked up in it.

Figs. 1, 2 and 3 on page 2 illustrate the three short wave ranges and will you some idea of what type programs may be obtained at any part of the di

8. After the desired station is tuned in correctly, the tone control may adjusted to suit the indivdual requirements of the listener. **With the tone co all the way to the left, music is reproduced with the greatest clarity and f fulness to the original.** As this control is turned toward the right, the lo tones receive more and more emphasis, so that the music takes on an appare deeper pitch. The best setting for the tone control depends entirely upon personal preference of the listener.

In addition to regulating tone, the tone control has a very important func in reducing static and those interference noises created by the operation electrical machinery. As it happens, these crackling and frying noises are largely composed of the higher tones, so that turning the tone control to the right reduces this interference to a very great extent.

9. As a result of the automatic volume control action of the receiver sensitivity increases as you tune away from a station so that the static no always present in the air increase at the same time. This accounts for crackling and frying noises heard between stations when the right hand k is pulled out.

If you are listening to local stations only, it is best to push the right h knob in. This not only eliminates noise between stations, but renders tuning much easier.

7
1
0

...y be noticed occasionally when listening to distant stations that ...ound noise increases and decreases in a regular fashion, although the ...t does not fluctuate in volume. This is due entirely to fading of ...ing wave. The automatic volume control prevents any change in ...t as the signal tends to fade out, the sensitivity of the set automatic...ses, and the static that is always present becomes greater in proportion ...ker signal and is, therefore, heard more loudly. This action is particu...able on the short wave ranges.

...shut off the set, turn the right hand knob all the way back toward ...til the sharp click of the switch is heard and the pilot light back of ...es out.

FRONT OF SET

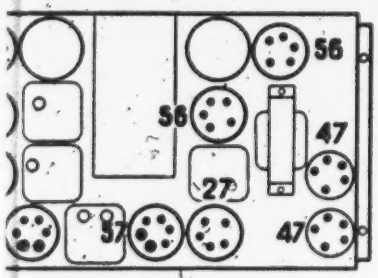

...TE: Use an 80 tube in the Power Unit Below.

Fig. 5. Tube Positions.

TUBES USED

The tubes used and their position in the set is shown in Fig. 5.

The '58 type tube is identical in appearance to the '57, the only difference between the two as far as the eye can judge, being in the tube number stamped into the bakelite base. When replacing tubes, it is, therefore, necessary to exercise care so as not to interchange them. While the set will operate with a '57 tube in a '58 socket, or vice versa, performance will be very poor.

SUGGESTIONS

...s Poor—

...may have a defective tube.
...aerial or ground may be poor. Inside aerials very seldom give as ...volume as outside ones.
...may be shielded by a steel building.
...may not have followed instructions. Read the instructions again very ...lly, making certain that you have followed them exactly.
...ne voltage may be low.
...may have a '57 tube in the '58 socket.
...erial lead-in connection may be broken.
...erial wire may be disconnected from the set.

...owls—

...ling should occur occasionally when receiving short wave signals; ...volume and carefully retune to the exact station setting and it ...op.

...ity Is Poor—

...ne control may not be adjusted properly.
...ction is not properly tuned in.
...ay have a poor tube.
...eaker may be defective.

SHORT WAVE BROADCAST STATIONS

(Courtesy International Short Wave Radio, Klondyke, Ohio)

Since short wave broadcast schedules change at frequent intervals, we cannot guarantee the accuracy of these log tables. For those who are particularly interested in short wave reception we suggest a subscription to a good short wave magazine, such as "International Short Wave Radio," published in Klondyke, Ohio, which has a very complete log that is brought up to date every month.

(Note—The following group of stations broadcast musical programs. Commercial stations are listed separately.)

Wave Length	Call Letters	Location	Operating Schedule (Eastern Standard Time)
14.47	LSY	Buenos Aires, Argentina.	Near 4 P. M. Sundays.
15.93	PLE	Bandoeng, Java.	Tuesdays, 8:40-10:40 A. M.
19.57	W2XAD	Schenectady, N. Y.	3 to 6 P. M. daily, Sat. & Sun. 1 to 6 P. M.
19.68	.....	Pontoise, France.	7 A. M. to 10 A. M. daily.
19.72	W8XK	Pittsburgh, Pa.	6 A. M. to 4 P. M. daily.
19.73	DJB	Zeesen, Germany.	Irregularly Mon., Fri., Sat. and Sun., 8 A. M. to 4 P. M. Usually 8 A. M. to 1 P. M.
19.84	HVJ	Vatican City.	Broadcasts daily 5 A. M. to 5:15 A. M.
19.90	T14-NRH	Heredia, Costa Rica.	Sat. 11 A. M. to noon, 4-5 P. M., and 10-11 P. M. Sun. and Mon., 11 A. M. to noon and 4-5 P. M.
20.60	HBJ	Geneva, Switzerland.	Testing.
20.95	G2XM	Sonning-on-Thames, Eng.	Sundays.
23.38	.....	Rabat, Morocco.	Sunday, 7:30 to 9 A. M.
24.60	CT3AQ	Funchel, Madeira.	Tues., Thurs., 4-6:30 P. M., Sun., 10:30 A. M. to noon.
25.20	.....	Pontoise, France.	10:30 A. M. to 1:30 P. M.
25.25	W8XK	Pittsburgh, Pa.	11 A. M. to 9 P. M.
25.34	W9XAA	Chicago, Ill.	Relays WCFL, irregularly.
25.40	12RO	Rome, Italy.	11A.M.to12:30;3to5:30P.M.
25.42	W1XAL	Boston, Mass.	Testing, irregularly.
25.43	VE9GW	Bowmanville, Canada.	Week days, 12 noon to 3 P. M.
25.46	FC1CD	Chi-Hoa, Indo-China	Sat. 10:30A.M.till12:30P.M.
25.50	XDA	Mexico City.	Broadcasts daily, 3 to 4 P. M.
25.53	G5SW	Chelmsford, England.	Daily ex. Sun. 6:30 A. M. to 7:30 A. M. and 12:45 P. M. to 6 P. M.
25.60	VE9JR	Winnipeg, Canada.	Daily excent Sat. and Sun., 11:45 A. M. to 1:30 P. M.
25.68	.....	Pontoise, France.	3 P. M. to 6 P. M. daily.
26.50	.....	Radio Goldberg, Java.	Sun., Tues., Thurs., 5to7 A.M.
28.98	LSX	Buenos Aires, Argentina.	Tests 8 P. M. till 10 P. M.
30.40	EAQ	Madrid, Spain.	Daily 7:30 P. M. to 9 P. M., Sat. 1 to 3 P. M.
31.00	TI4NRH	Heredia, Costa Rica.	Dly.ex.Sat.&Sun.,10-11P.M.
31.25	CT1AA	Lisbon, Portugal.	Tues., Thurs., Fri., 4to7 P. M.
31.26	PCJ	Eindhoven, Holland.	

PLAINTIFFS' EXHIBIT NO. 93, Sheet 21.
420—
421
210

10. It may be noticed occasionally when listening to distant stations that the background noise increases and decreases in a regular fashion, although the program itself does not fluctuate in volume. This is due entirely to fading of the incoming wave. The automatic volume control prevents any change in volume, but as the signal tends to fade out, the sensitivity of the set automatically increases, and the static that is always present becomes greater in proportion to this weaker signal and is, therefore, heard more loudly. This action is particularly noticeable on the short wave ranges.

11. To shut off the set, turn the right hand knob all the way back toward the left until the sharp click of the switch is heard and the pilot light back of the dial goes out.

FRONT OF SET

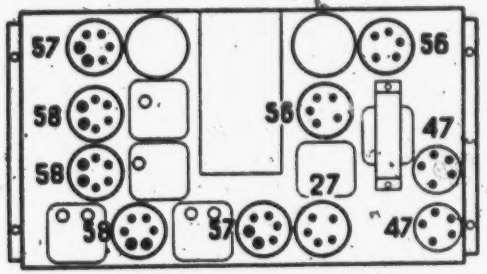

NOTE: Use an 80 tube in the Power Unit Below.

Fig. 5. Tube Positions.

TUBES USED

The tubes used and their position in the set is shown in Fig. 5.

The '58 type tube is identical in appearance to the '57, the only difference between the two as far as the eye can judge, being in the tube number stamped into the bakelite base. When replacing tubes, it is, therefore, necessary to exercise care so as not to interchange them. While the set will operate with a '57 tube in a '58 socket, or vice versa, performance will be very poor.

SUGGESTIONS

If Volume Is Poor—

1. You may have a defective tube.
2. Your aerial or ground may be poor. Inside aerials very seldom give as much volume as outside ones.
3. You may be shielded by a steel building.
4. You may not have followed instructions. Read the instructions again very carefully, making certain that you have followed them exactly.
5. The line voltage may be low.
6. You may have a '57 tube in the '58 socket.
7. The aerial lead-in connection may be broken.
8. The aerial wire may be disconnected from the set.

If the Set Howls—

1. If howling should occur occasionally when receiving short wave signals, reduce volume and carefully retune to the exact station setting and it will stop.

If Tone Quality Is Poor—

1. The tone control may not be adjusted properly.
2. The station is not properly tuned in.
3. You may have a poor tube.
4. The speaker may be defective.

SHORT WAVE BROADCAST STATIONS

(Courtesy International Short Wave Radio, Klondyke, Ohio)

Since short wave broadcast schedules change at frequent intervals, we cannot guarantee the accuracy of these log tables. For those who are particularly interested in short wave reception we suggest a subscription to a good short wave magazine, such as "International Short Wave Radio," published in Klondyke, Ohio, which has a very complete log that is brought up to date every month.

(Note—The following group of stations broadcast musical programs. Commercial stations are listed separately.)

Wave Length	Call Letters	Location	Operating Schedule (Eastern Standard Time)
14.47	LSY	Buenos Aires, Argentina.	Near 4 P. M. Sundays.
15.93	PLE	Bandoeng, Java.	Tuesdays, 8:40-10:40 A. M.
19.57	W2XAD	Schenectady, N. Y.	3 to 6 P. M. daily, Sat. & Sun. 1 to 6 P. M.
19.68	.....	Pontoise, France.	7 A. M. to 10 A. M. daily.
19.72	W8XK	Pittsburgh, Pa.	6 A. M. to 4 P. M. daily.
19.73	DJB	Zeesen, Germany.	Irregularly Mon., Fri., Sat. and Sun., 8 A. M. to 4 P. M. Usually 8 A. M. to 1 P. M.
19.84	HVJ	Vatican City.	Broadcasts daily 5 A. M. to 5:15 A. M.
19.90	T14-NRH	Heredia, Costa Rica.	Sat. 11 A. M. to noon, 4-5 P. M., and 10-11 P. M. Sun. and Mon., 11 A. M. to noon and 4-5 P. M.
20.60	HBJ	Geneva, Switzerland.	Testing.
20.95	G2XM	Sonning-on-Thames, Eng.	Sundays.
23.38	.....	Rabat, Morocco.	Sunday, 7:30 to 9 A. M.
24.00	CT3AQ	Funchel, Madeira.	Tues., Thurs., 4-6:30 P. M. Sun., 10:30 A. M. to noon.
25.20	.....	Pontoise, France.	10:30 A. M. to 1:30 P. M.
25.25	W8XK	Pittsburgh, Pa.	11 A. M. to 9 P. M.
25.34	W9XAA	Chicago, Ill.	Relays WCFL, irregularly.
25.40	12RO	Rome, Italy.	11 A.M. to 12:30; 3 to 5:30 P.M.
25.42	W1XAL	Boston, Mass.	Testing, irregularly.
25.43	VE9GW	Bowmanville, Canada.	Week days, 12 noon to 3 P. M.
25.46	FC1CD	Chi-Hoa, Indo-China	Sat. 10:30 A.M. till 12:30 P. M.
25.50	XDA	Mexico City.	Broadcasts daily, 3 to 4 P. M.
25.53	G5SW	Chelmsford, England.	Daily ex. Sun. 6:30 A. M. to 7:30 A. M. and 12:45 P. M. to 6 P. M.
25.60	VE9JR	Winnipeg, Canada.	Daily excent Sat. and Sun. 11:45 A. M. to 1:30 P. M.
25.68	.....	Pontoise, France.	3 P. M. to 6 P. M. daily.
26.50	.....	Radio Goldberg, Java.	Sun., Tues., Thurs., 5 to 7 A.M.
28.98	LSX	Buenos Aires, Argentina.	Tests 8 P. M. till 10 P. M.
30.40	EAQ	Madrid, Spain.	Daily 7:30 P. M. to 9 P. M. Sat. 1 to 3 P. M.
31.00	TI4NRH	Heredia, Costa Rica.	Dly. ex. Sat. & Sun., 10-11 P.M.
31.25	CT1AA	Lisbon, Portugal.	Tues., Thurs., Fri., 4 to 7 P. M.
31.26	PCJ	Eindhoven, Holland.	

SHORT WAVE BROADCAST STATIONS

Wave Length	Call Letters	Location	Operating Schedule (Eastern Standard Time)
31.28	VK2ME	Sydney, Australia.	Broadcasts Sundays 1 A. M. to 3 A. M., 5 A. M. to 9 A. M. and 9:30 A. M. to 11:30 A. M.
31.28	W3XAU	Philadelphia, Pa.	3 P. M.-Midnight, except Thurs. and Fri.
31.36	W1XAZ	Springfield, Mass.	6:30 A. M. to 10 P. M.
31.38	DJA	Zeesen, Germany.	8-9 A. M., 10:30-1:30 P. M., and 2-6:30 P. M.
31.40	VK3ME	Melbourne, Australia.	Wed.5-6:30A.M.,Sat.5-7A.M.
31.48	W2XAF	Schenectady, N. Y.	Daily 5 P. M. to 11 P. M.
31.51	OXY	Skamlebaek, Denmark.	Broadcasts 2 to 6:30 P. M.
31.86	PLV	Bandoeng, Java.	Tuesdays, 8:40-10:40 A. M.
32.00	CT3AQ	Funchel, Madeira.	Tue., Thur., 4-6:30 P. M., Sun., 10:30 to noon.
32.26	.....	Rabat, Morocco.	Broadcasts Sun., 3 to 5 P. M.
33.50	TGX	GuatemalaCity,Guatemala.	Sat., 10 P. M. till midnight.
34.68	VE9BY	London, Canada.	Mondays, 3 to 4 P. M.
38.60	HBP	Geneva, Switzerland..	Testing.
39.40	HKF	Bogota, Colombia.	7 P. M. to 11 P. M.
41.00	CM5RY	Matanzas, Cuba.	Sat.; 10:45 to 11:30 P. M.
41.60	EAR58	Tenerife.	Sat. and Sun., 4:30 P. M. to 6 P. M.
42.00	HKT	Manizales, Colombia.	Thur. and Sat., 7-9 P. M. and 11-12 P. M.
42.10	HKK	Cali, Colombia.	Irregular.
42.20	HKN	Medellin, Colombia.	8 P. M. till 10 P. M.
42.90	CT1AA	Lisbon, Portugal.	Fridays, 4 P. M. till 6 P. M.
45.25	HKM	Bogota, Colombia.	Broadcasts 8:30-10:30 P. M. Earlier Sundays.
45.31	PRADO	Riobamba, Ecuador.	Thurs., 9 P. M. till 0 P. M.
46.40	TGW	GuatemalaCity,Guatemala.	9 P. M.-11 P. M.
46.60	REN	Moscow, U. S. S. R.	Moscow, 1 P. M. to 6 P. M,
46.67	VE9BY	London, Canada.	Wed., 8:30-9:30 P. M., Fri., 7:00-7:55 A. M. and Sat., 8-11 P. M.
46.96	W3XL	Boundbrook, N. J.	No regular schedule.
47.00	HCIDR	Quito, Ecuador.	Broadcasts daily, 8 to 10 P. M.
47.30	HSK	Cali, Colombia.	Irregular, near 10 P. M.
48.85	VE9CL	Winnipeg, Canada.	Daily ex. Sun., 6-8:30 P. M.
48.90	HKA	Barranquilla, Colombia.	Broadcasts daily, 8 to 10 P. M.
48.90	FAICD	Chi-Hoa, Indo-China.	6:30 till 10:30 A. M. daily.
48.95	YV11BMO	Maracaibo, Venezuela.	Broadcasts, 8 to 11 P. M.
49.18	W3XAL	Boundbrook, N. J.	Daily, 4 P. M. till midnight.
49.20	JIB	Johannesburg, South Africa.	
49.22	VE9GW	Bowmanville, Canada.	Weekdays, 3-9 P. M., Sun., 11 A. M.-7 P. M.
49.34	W9XAA	Chicago, Ill.	Relays WCFL, Sun., 11 A. M. -9 P. M.; Wed., Sat., 8:30 A. M. to 9 P. M.; Tues. and Thurs., 8:30 A. M. to 8 P. M.

SHORT WAVE BROADCAST STATIONS

Wave Length	Call Letters	Location	Operating Schedule (Eastern Standard Time)
49.40	UOR2	Vienna, Austria.	Tue. and Thurs., 8:30 A. M. to noon, 3-5 P. M.
49.42	VE9CS	Vancouver, B. C.	Sun., 3:30 P. M. to midnight; Fri. at 0 to 1:30 A. M.
49.50	W8XAL	Cincinnati, Ohio.	5 A. M.-9:30 A. M., 12:30-2:30 P. M. and 6 P. M. to 12:30 midnight.
49.50	W3XAU	Philadelphia, Pa.	Thurs. and Fri., 6:15 A. M. to midnight. Other days, 6:15 A. M. to 3 P. M.
49.50	VQ7LO	Nairobi, Kenya, Africa.	Daily, 11 A. M.-3:30 P. M.; Tues., 3 A. M.-4 A. M.; Thur., 8 A. M. to 9 A. M.
49.50	CMCI	Havana, Cuba.	9 P. M.-11 P. M.
49.51	ZL2ZX	Wellington, N. Z.	Mon., Wed., Thurs., Sat., 12:30-4 A. M.
49.59	VE9HX	Halifax, N. S.	Mon., Tues., 6-10 P. M. Other days, 6-7 P. M.
49.80	XEW	Mexico City, Mexico.	Broadcasts, 8-11 P. M., Sun., to 2 A. M.
49.83	W9XF	Chicago, Ill.	2:30-7:00 P. M., 8:30 P. M.-1 A. M.
49.96	VE9DR	Drummondville, Canada.	7 P. M. to 12 midnight.
50.00	HKD	Barranquilla, Colombia.	Daily, 8-10 P. M.
50.00	RW59	Moscow, U. S. S. R.	Thurs. and Sun., 4 to 5 P. M.
50.26	HVJ	Vatican City.	Broadcasts daily, 2-2:15 P. M.; Sun., 5-5:30 A. M.
50.60	HKO	Medellin, Colombia.	Mon., Wed., Fri., 8 to 10 P. M.; Tues., Sat., 6 to 8 P. M.
51.00	HKB	Tunja, Colombia.	Irregular near 10 P. M.
52.50	HCJB	Quito, Ecuador.	Daily except Monday, 7:30 to 10 P. M.
52.70	FIUI	Tananarive, Madagascar.	Sat., Sun., 1-3 P. M. Other days 9:15-11:15 A. M.
62.50	W2XV	Long Island City, N. Y.	Wed. and Fri., 8 till 10 P. M.
62.56	VE9BY	London, Canada.	Saturday, midnight on.
70.1	RV15	Khabarovsk, U. S. S. R.	3 A. M.-9 A. M.
109.60	VE9CI	London, Ontario.	Daily, 9 to 11 P. M.; Sun., 11 A. M.-7 P. M.

PLAINTIFF'S EXHIBIT NO. 93, Sheet 22.

422-
423

SHORT WAVE COMMERCIAL STATIONS

(Note—These stations are used for relaying telephone messages between countries, ships at sea and shore stations, and aircraft and airport stations. These stations oftimes may be on the air for hours without anything taking place on them, with the exception of the aircraft stations which come on the air and back off again in an instant, or as soon as a message is delivered. They are also sometimes rented to relay radio programs.)

Wave Length	Call Letters	Location	Operating Schedule (Eastern Standard Time)
14.01	WKK	Lawrenceville, N. J.	Phones 8 A. M. till 4 P. M. LSN.
14.19	LSM	Buenos Aires, Arg.	Phones Europe, mornings.
14.24	WKA	Lawrenceville, N. J.	Phones England, 8 A. M. till 4 P. M.
14.27	LSN	Buenos Aires, Arg.	Phones WLO, 8 A. M.-4 P. M.
14.47	LSY	Buenos Aires, Arg.	Phones 10 A. M. to 2 P. M., irregular.
14.55	PMB	Bandoeng, Java.	3:10 A. M.-4:40 A. M. and 8-9:20 A. M., PCK.
14.70	GBA	Rugby, England.	Phones to ships and LSN, irregular.
14.97	DHO	Nauen, Germany.	Phone to LSG., 7 A. M.-11 A. M., irregular.
14.97	OPL	Leopoldsville, Belg. Congo.	Phones ORG mornings.
15.07	LSG	Buenos Aires, Arg.	Phone to FTM, 10:30 A. M.-3:30 P. M.
15.13	WKN	Lawrenceville, N. J.	Phones England, 8 A. M. till 4 P. M.
15.23	EAQ	Madrid, Spain.	Phones to LSY, 7-11 A. M., irregular.
15.24	CEC	Santiago, Chile.	Phones LSR, HJY, near 11 A. M. and 4 P. M.
15.50	FTM	St. Assise, France.	10 A. M.-2 P. M., LSG.
15.57	PPU	Rio de Janeiro, Brazil.	Phone to FTM, 10:30 A. M.-3 P. M.
15.58	DFA	Nauen, Germany.	Phone to XDA, irregularly, 10 A. M.-2 P. M.
15.61	WKF	Lawrenceville, N. J.	Phones England, 8 A. M. till 4 P. M.
15.62	ORG	Brussels, Belgium.	Testing phone, 11 A. M.-11:30 A. M.
15.77	WKW-W2XBJ	Rocky Point, N. Y.	Testing, mornings.
15.82	LSR	Buenos Aires, Arg.	Phones HJY, CEC, 11 A. M. and 4 P. M.
15.93	PLE	Bandoeng, Java.	Tues., Fri., 5:40-10:40 A. M., PCK.
16.06	QCI	Lima, Peru.	Testing with HJY near 2 P. M.
16.11	GBU	Rugby, England.	6 A. M.-2 P. M., WMI.
16.25	HJY	Bogota, Colombia.	Phones CEC, LSR, 11 A. M. and 4 P. M.
16.35	WLA	Lawrenceville, N. J.	Phones England, 8 A. M. till 4 P. M.
16.35	ZLW	Wellington, New Zealand.	Phones VK2ME, irregularly.
16.38	GBS	Rugby, England.	6 A. M.-2 P. M., WND.
16.39	YVQ	Maracay, Venezuela.	Testing near 10 A. M., irreg.
16.44	FTE	St. Assise, France	Phones to FZR, 5 to 9 A. M.

SHORT WAVE COMMERCIAL STATIONS

Wave Length	Call Letters	Location	Operating Schedule (Eastern Standard Time)
16.50	PMC	Bandoeng, Java.	Phones PCV, 3:10-9:20 A. M.
16.54	GBW	Rugby, England.	6 A. M.-2 P. M., WNC.
16.57	GBK	Bodmin, England.	6 A. M.-2 P. M., CGA.
16.67	KQJ	Bolinas, California.	Testing.
16.82	PCV	Kootwijk, Holland.	6 A. M.-9 A. M., Java.
17.05	.....	Ships Majestic (GFWV), Olympic (GLSQ), Belgenland (GMJQ), Homeric (GDLJ), Leviathan (WSBN), Monarch of Bermuda (GTSD), Minnetonka (GKFY), Empress of Britain (GMBJ).	
17.52	WOO	Ocean Gate, N. J.	Phones ships irregularly.
18.06	DAN	Xorden, Germany.	Testing with ships, 9 A. M.-12 noon.
18.44	WLK	Lawrenceville, N. J.	Phones England.
18.56	GBX	Rugby, England.	4 P. M.-11 P. M., VK2ME.
18.71	KKP	Kaunuku, Hawaii.	Phones KWO, 2 P. M.-7 P. M.
18.90	FTK	St. Assise, France.	Phones to FZS, 9 to 10 A. M.
19.03	JIAA	Kemikawa-Cho, Japan.	Experimental, heard early mornings.
19.46	KWO	Dixon, California.	Phones Hawaii, 2-7 P. M.
19.54	KWU	Dixon, California.	Phones Hawaii 2 till 7 P. M.
20.27	WKU-W2XBJ	Rocky Point, N. Y.	Testing in daytime.
20.42	PSS	Rio de Janeiro, Brazil.	Testing with LSN, near 6 P. M.
20.56	WMN	Lawrenceville, N. J.	Phones England, daylight.
20.70	LSN	Buenos Aires, Argentina.	Phones WLO, afternoons.
20.73	WMF	Lawrenceville, N. J.	Phones England, daylight.
20.75	GBW	Rugby, England.	Phones WNC, 6 A. M.-6 P. M.
20.97	.....	.....	Amateur phones heard in daylight.
21.26	.....	.....	.....
21.63	WIY-W2XBJ	Rocky Point, N. Y.	Testing irregular.
21.77	KKW	Dixon, California.	Phones, irregularly.
21.90	KKZ	Bolinas, California.	Testing, irregularly.
22.06	GBB-GBC	Rugby, England.	Phones CGA and ships, afternoons.
22.40	WMA	Lawrenceville, N. J.	Phones England, daylight.
22.68	.....	Ships Majestic (GFWV), Olympic (GLSQ), Belgenland (GMJQ), Homeric (GDLJ), Leviathan (WSBN), Monarch of Bermuda (GTSD), Minnetonka (GKFY), Empress of Britain (GMBJ).	
22.93	JIAA	Kemikawa-Cho, Japan.	Experimental tests, irregularly
23.00	.....	German ships.	11:15 A. M. to 1:30 P. M.
23.36	WOO	Ocean Gate, N. J.	Phone ships, irregularly.
23.38	CNR	Rabat, Morocco	Phones St. Assise, 5-8 A. M.
23.50	IAC	Coltana, Italy.	Testing, irregularly.
24.00	DAN	Xorden, Germany.	Phones ships, noon to 3 P. M.

PLAINTIFFS' EXHIBIT No. 93, Sheet 28. 424—425

SHORT WAVE COMMERCIAL STATIONS

Call Letters	Location	Operating Schedule (Eastern Standard Time)
LM	Bandoeng, Java.	Phones VK2ME near 6:30 A. M.
ZLW	Wellington, New Zealand.	Phone VK2ME, 3 to 8 A. M.
GBU	Rugby, England.	2 P. M.-7 P. M., WMI.
FTN	St. Assise, France.	Testing with USA, irregularly.
GBX	Rugby, England.	4 A. M.-9 A. M.
GBS	Rugby, England.	2 P. M.-7 P. M.
KKQ	Bolinas, California.	Testing, irregularly.
KIO	Kauhuku, Hawaii.	2 to 8 P. M., irregularly.
YVQ	Maracay, Venezuela.	Testing, 5-7 P. M.
PPQ	Rio de Janeiro, Brazil.	Testing near 6 P. M.
XAM	Merida, Yucatan.	Phones XDA, 10 A. M. to 10 P. M., irregularly.
OCI	Lima, Peru.	Phones HJY, evenings.
KWV	Dixon, California.	Phones Hawaii, irregularly.
CEC	Santiago, Chile.	Testing with HJY, evenings.
WOK	Lawrenceville, N. J.	Phones LSN, evenings.
VK2ME	Sydney, Australia.	1 A. M.-7 A. M., GBX.
KEZ	Bolinas, California.	Testing.
PKP	Medan, Sumatra.	Phones Java and VLK, 3 A. M. to 8 A. M.
LSX	Buenos Aires, Argentina.	Testing with U. S. A., 8 to 11 P. M., irregularly.
ORK	Brussells, Belgium.	Phones OPM, 2-4, 9-11 A. M., 3-6 P. M.
PSH	Rio de Janeiro, Brazil.	Testing with W2XBJ, eves.
OPM	Leopoldsville, Belg. Congo.	Phones ORK 2-4, 9-11 A. M., 3-6 P. M.
RT-ZFB	Hamilton, Bermuda.	Phones WNB in daytime.
BU	Rugby, England.	5 P. M.-11 P. M., WMI.
JY	Bogota, Colombia.	Phones OCI irregularly, eves.
SN	Buenos Aires, Argentina.	6 P. M.-6 A. M., WLO.
ON	Lawrenceville, N. J.	Phones England, evenings.
W	Rugby, England.	Phones America, evenings.
KE-VLK	Sydney, Australia.	Phones Java, 4 A. M.-8 A. M.
F	Lawrenceville, N. J.	Phones England, evenings.
F-W2BJ	Rocky Point, N. Y.	Testing irregularly, evenings.
W	Bandoeng, Java.	Phones Australia, 3 A. M.-8 A. M., irregularly.
S-W2XBJ	Rocky Point, N. Y.	Testing irregularly, evenings.
V	Bandoeng, Java.	Phones Australia and Sumatra, 4 A. M.-8 A. M.
A	Drummondville, Canada.	6 P. M.-6 A. M., GBK.
C	Rugby, England.	Phones to ships irregularly.
K	Bodmin, England.	6 P. M.-6 A. M., CGA.
A	Lawrenceville, N. J.	Phones England, evenings.
S	Rugby, England.	6 P. M.-6 A. M., WND.
J	Bolinas, California.	Testing irregularly.
L-W2XBJ	Rocky Point, N. Y.	Testing irregularly, evenings.
F	Wellington, New Zealand.	Phones VLK, 3 A. M.-9 A. M.

SHORT WAVE COMMERCIAL STATIONS

Wave Length	Call Letters	Location	Operating Schedule (Eastern Standard Time)
33.95	.....	Ships Majestic (GFWV), Olympic (GLSQ), Belgenland (GMJQ), Homeric (GDLJ), Leviathan (WSBN), Monarch of Bermuda (GTSD), Minnetonka (GKFY), Empress of Britain (GMBJ).	
35.02	WOO	Ocean Gate, N. J.	Phones ships, irregularly.
36.00	DAN	Norden, Germany.	Phones ships 2-4 A. M. and 3-9 A. M.
36.00	.....	German ships.	2:30 A. M., 4:45 P. M. and 9:30 P. M.
36.65	PSK	Rio de Janeiro, Brazil.	Heard phoning WOK.
37.76	VK2ME	Sydney, Australia.	Tests, 3:00-7:00 A. M., GBX.
38.07	JIAA	Kemikawa-Cho, Japan.	Testing with KEL, irregularly.
38.86	KEE	Bolinas, California.	Testing, irregularly.
39.42	KWX	Dixon, California.	Phones Hawaii, nights.
39.65	KWY	Dixon, California.	Phones Hawaii, nights.
39.89	KDK-KKH	Kauhuku, Hawaii.	Phones KWO, 9 P. M.-2 A. M.
40.54	WEM-W2XBJ	Rocky Point, N. Y.	Testing irregularly, evenings.
42.9	GBS	Rugby, England.	6 P. M.-6 A. M., WND.
43.54	KEQ	Kauhuku, Hawaii.	Phones California, nights.
43.7	KEL	Bolinas, California.	Testing, irregular, JIAA.
44.41	WOA	Lawrenceville, N. J.	Phones VRT, nights.
44.41	WOB	Lawrenceville, N. J.	Phones England, nights.
44.54	WEJ-W2XBJ	Rocky Point, N. Y.	Testing irregularly, evenings.
44.91	DGK	Nauen, Germany.	Testing with WEJ near 9 P. M.
51.00	XDA	Mexico City, Mexico.	Testing with XAM, 10 A. M.-8 P. M., irregularly.
51.09	WNB	Lawrenceville, N. J.	Phones Bermuda, nights.
52.00	XAM	Merida, Yucatan.	Testing with XDA, 10 A. M.-8 P. M., irregularly.
58.30	PMY	Bandoeng, Java.	Phones Australia, near 11 A. M.
59.42	VRT-ZFA	Hamilton, Bermuda.	Phones WNB & GMBJ, nights.
60.26	GBC	Rugby, England.	Phones to ships, irregularly.
62.70	CGA	Drummondville, Canada.	Phones ships, irregularly.
63.13	WOO	Ocean Gate, N. J.	Phones ships, irregularly.
71.82	.....	Ships Majestic (GFVW), Olympic (GLSQ), Belgenland (GMJQ), Homeric (GDLJ), Leviathan (WNBN), Monarch of Bermuda (GTSD), Minnetonka (GKFY), Empress of Britain (GMBJ).	
75-75.8	.....	.....	Amateurs on voice.
118.06	WOX	.....	Bell Telephone Test Station, irregularly.

PLAINTIFF'S EXHIBIT NO. 93, Sheet 24.

426-427

713

SHORT WAVE COMMERCIAL STATIONS

Wave Length	Call Letters	Location	Operating Schedule (Eastern Standard Time)
24.40	PLM	Bandoeng, Java.	Phones VK2ME near 6:30 A. M.
24.40	ZLW	Wellington, New Zealand.	Phone VK2ME, 3 to 8 A. M.
24.41	GBU	Rugby, England.	2 P. M.-7 P. M., WM1.
24.46	FTN	St. Assise, France.	Testing with USA, irregularly.
24.60	GBX	Rugby, England.	4 A. M.-9 A. M.
24.6	GBS	Rugby, England.	2 P. M.-7 P. M.
25.05	KKQ	Bolinas, California.	Testing, irregularly.
25.65	KIO	Kauhuku, Hawaii.	2 to 8 P. M., irregularly.
25.67	YVQ	Maracay, Venezuela.	Testing, 5-7 P. M.
25.75	PPQ	Rio de Janeiro, Brazil.	Testing near 6 P. M.
26.00	XAM	Merida, Yucatan.	Phones XDA, 10 A. M. to 10 P. M. irregularly.
27.35	OCI	Lima, Peru.	Phones HJY, evenings.
27.68	KWV	Dixon, California.	Phones Hawaii, irregularly.
28.12	CEC	Santiago, Chile.	Testing with HJY, evenings.
28.44	WQK	Lawrenceville, N. J.	Phones LSN, evenings.
28.5	VK2ME	Sydney, Australia.	1 A. M.-7 A. M., GBX.
28.80	KEZ	Bolinas, California.	Testing.
28.80	PKP	Medan, Sumatra.	Phones Java and VLK, 3 A. M. to 8 A. M.
28.98	LSX	Buenos Aires, Argentina.	Testing with U. S. A., 8 to 11 P. M., irregularly.
28.99	ORK	Brussells, Belgium.	Phones OPM, 2-4, 9-11 A. M., 3-6 P. M.
29.35	PSH	Rio de Janeiro, Brazil.	Testing with W2XBJ, eves.
29.70	OPM	Leopoldsville, Belg. Congo.	Phones ORK 2-4, 9-11 A. M., 3-6 P. M.
29.80	VRT-ZFB	Hamilton, Bermuda.	Phones WNB in daytime.
30.15	GBU	Rugby, England.	5 P. M.-11 P. M., WM1.
30.20	HJY	Bogota, Colombia.	Phones OCI irregularly, eves.
30.3	LSN	Buenos Aires, Argentina.	6 P. M.-6 A. M., WLO.
30.40	WQN	Lawrenceville, N. J.	Phones England, evenings.
30.60	GCW	Rugby, England.	Phones America, evenings.
30.75	V2KE-VLK	Sydney, Australia.	Phones Java, 4 A. M.-8 A. M.
30.77	WOF	Lawrenceville, N. J.	Phones England, evenings.
31.60	WEF-W2BJ	Rocky Point, N. Y.	Testing irregularly, evenings.
31.63	PLW	Bandoeng, Java.	Phones Australia, 3 A. M.-8 A. M., irregularly.
31.74	WES-W2XBJ	Rocky Point, N. Y.	Testing irregularly, evenings.
31.86	PLV	Bandoeng, Java.	Phones Australia and Sumatra, 4 A. M.-8 A. M.
31.2	CGA	Drummondville, Canada.	6 P. M.-6 A. M., GBK.
32.21	GBC	Rugby, England.	Phones to ships irregularly.
32.4	GBK	Bodmin, England.	6 P. M.-6 A. M., CGA.
32.72	WNA	Lawrenceville, N. J.	Phones England, evenings.
33.25	GBS	Rugby, England.	6 P. M.-6 A. M., WND.
33.27	KEJ	Bolinas, California.	Testing irregularly.
33.52	WEL-W2XBJ	Rocky Point, N. Y.	Testing irregularly, evenings.
33.70	ZLT	Wellington, New Zealand.	Phones VLK, 1 A. M.-9 A. M.

SHORT WAVE COMMERCIAL STATIONS

Wave Length	Call Letters	Location	Operating Schedule (Eastern Standard Time)
33.95	.....	Ships Majestic (GFWV), Olympic (GLSQ), Belgenland (GMJQ), Homeric (GDLJ), Leviathan (WSBN), Monarch of Bermuda (GTSD), Minnetonka (GKFY), Empress of Britain (GMBJ).	
35.02	WOO	Ocean Gate, N. J.	Phones ships, irregularly.
36.00	DAN	Norden, Germany.	Phones ships 2-4 A. M. and 3-9 A. M.
36.00	.....	German ships.	2:30 A. M., 4:45 P. M. and 9:30 P. M.
36.65	PSK	Rio de Janeiro, Brazil.	Heard phoning WOK.
37.76	VK2ME	Sydney, Australia.	Tests, 5:00-7:00 A. M., GBX.
38.07	J1AA	Kemikawa-Cho, Japan.	Testing with KEL, irregularly.
38.86	KEE	Bolinas, California.	Testing, irregularly.
39.42	KWX	Dixon, California.	Phones Hawaii, nights.
39.65	KWY	Dixon, California.	Phones Hawaii, nights.
39.89	KDK-KKH	Kauhuku, Hawaii.	Phones KWO, 9 P. M.-2 A. M.
40.54	WEM-W2XBJ	Rocky Point, N. Y.	Testing irregularly, evenings.
42.9	GBS	Rugby, England.	6 P. M.-6 A. M., WND.
43.54	KEQ	Kauhuku, Hawaii.	Phones California, nights.
43.7	KEL	Bolinas, California.	Testing, irregular, J1AA.
44.41	WOA	Lawrenceville, N. J.	Phones VRT, nights.
44.41	WOB	Lawrenceville, N. J.	Phones England, nights.
44.54	WEJ-W2XBJ	Rocky Point, N. Y.	Testing irregularly, evenings.
44.91	DGK	Nauen, Germany.	Testing with WEJ near 9 P. M.
51.00	XDA	Mexico City, Mexico.	Testing with XAM, 10 A. M.-8 P. M., irregularly.
51.09	WNB	Lawrenceville, N. J.	Phones Bermuda, nights.
52.00	XAM	Merida, Yucatan.	Testing with XDA, 10 A. M.-8 P. M., irregularly.
58.30	PMY	Bandoeng, Java.	Phones Australia, near 11 A. M.
59.42	VRT-ZFA	Hamilton, Bermuda.	Phones WNB & GMBJ, nights.
60.26	GBC	Rugby, England.	Phones to ships, irregularly.
62.70	CGA	Drummondville, Canada.	Phones ships, irregularly.
63.13	WOO	Ocean Gate, N. J.	Phones ships, irregularly.
71.82	.....	Ships Majestic (GFVW), Olympic (GLSQ), Belgenland (GMJQ), Homeric (GDLJ), Leviathan (WNBN), Monarch of Bermuda (GTSD), Minnetonka (GKFY), Empress of Britain (GMBJ).	
75–75.8	.....	.....	Amateurs on voice.
118.06	WOX	.....	Bell Telephone Test Station, irregularly.

POLICE STATIONS

(Note—These stations are used by Police departments to relay messages to police cars that patrol the cities. They come on the air, deliver their message and go right off again. When one is tuned in, just keep the dials at the same place and ofttimes many others may be heard.)

Wave Length	Call Letters and Location
119.71	KGPV, Des Moines, Iowa.
121.5	KGOZ, Cedar Rapids, Iowa; KGPN, Davenport, Iowa; WPDZ, Fort Wayne, Ind.; WPDT, Kokomo, Ind.; WPEC, Memphis, Tenn.; KGPI, Omaha, Neb.; WPDP, Philadelphia, Pa.; KGPW, Salt Lake City, Utah; KGPM, San Jose, Calif.; KGPK, Sioux City, Iowa; WRDQ, Toledo, Ohio.
122.05	WPDO, Akron, Ohio; WPDN, Auburn, N. Y.; WPDV, Charlotte, N. C.; Rochester, N. Y.; WPEA, Syracuse, N. Y.; WPDG, Youngstown, Ohio.
122.35	WRBH, Cleveland, Ohio; KGPZ, Wichita, Kansas.
122.4	WPEF, Bronx, N. Y.; WPEE, Brooklyn, N. Y.; KGPQ, Honolulu, Hawaii; WPDK, Milwaukee, Wis.; WPEG, New York, N. Y.; KGPH, Oklahoma City, Okla.; KGPO, Tulsa, Okla.
123.45	WPDI, Columbus, Ohio.
123.86	KSW, Berkeley, Calif.; WMJ, Buffalo, N. Y.; KGPX, Denver, Colo.; WPDF, Flint, Mich.; WPEB, Grand Rapids, Mich.; WMDZ, Indianapolis, Ind.; KGPE, Kansas City, Mo.; WPDL, Lansing, Mich.; WPDE, Louisville, Ky.; KGPP, Portland, Ore.; WPDH, Richmond, Ind.; KGPG, Vallejo, Calif.
124.17	WPDM, Dayton, Ohio; KGZA, Fresno, Calif.; KGPB, Minneapolis, Minn.; WPDJ, Passaic, N. J.; WPDS, St. Paul, Minn.
124.27	WPDY, Atlanta, Ga.; KGPS, Bakersfield, Calif.; WCK, WPDX, Detroit, Mich.; WRDR, Grosse Pointe Village, Mich.; WMO, Highland Park, Mich.; KGPA, Seattle, Wash.; WPDA, Tulare, Calif.
124.5	WPDW, Washington, D. C.
175.23	WPED, Arlington, Mass.; KGPJ, Beaumont, Texas; WPDB, WPDC, WPDD, Chicago, Illinois; WKDU, Cincinnati, Ohio; KVP, Dallas, Texas; KGPR, Fort Worth, Texas; KGZB, Houston, Texas; KGPL, Los Angeles, Calif.; KGJX, Pasadena, Calif.; WPDU, Pittsburgh, Pa.; KGPC, St. Louis, Mo.; WPEH, Sommerville, Mass.
187 97	WRDU, Brooklyn, N. Y.; WKDT, Detroit, Mich.; WCF, New York, N. Y.
190 6	WRDS, East Lansing, Mich.; WMP, Framingham, Mass.; KGPY, Shreveport, La.
192 55	WEY, Boston, Mass.

AIRCRAFT STATIONS

(Note—This group of stations is used to relay messages to and from airplanes, such as location of a plane, storms signal and similar messages. They come on the air suddenly, deliver a message and go right off again. This list contains only the land stations, although airplanes in flight may be found on the same wavelength.)

Wave Length	Call Letters and Location
53.00	American Airway stations. WSDC, Newark, N. J., WSDM, Albany, N. Y.; WSDO, Buffalo, N. Y.; WSDQ, Cleveland, Ohio. United Airway stations: KEU, Burbank, Calif.; KGT, Fresno, Calif.; Reading, Calif.; KGE, Medford, Ore.; KVO, Portland, Ore.; KZJ, Seattle, Wash.; KFM, Sacramento, Calif.; KQX, Bakersfield, Calif.
53.25	Southern Air Transport Lines. WQDP, Atlanta, Ga.; WSDE, Tuscaloosa, Alabama; WSDB, Jackson, Miss.; KGUK, Shreveport, La.; KGUF, Dallas, Texas; KGUC, Ft. Worth, Texas; KGUL, Abilene, Texas; KGUG, Big Springs, Texas, and KGUA, El Paso, Texas.
53.53	Boeing Air Transport Lines. WQDU, Aurora, Ill.; KQQ, Iowa City, Iowa KQM, Des Moines, Iowa; KMP, Omaha, Nebraska; KRF, Lincoln, Nebraska; KMR, North Platte, Nebraska; KQE, Cheyenne, Wyoming; KQC, Rock Springs, Wyoming; KQD, Salt Lake City, Utah; KKO, Elko, Nevada; KJE, Reno, Nevada; KFO, Oakland, Calif.; KRA, Boise, Idaho, and KDD, Pasco, Washington.
54.00	Transcontinental Air Transport. WAEF, Newark, N. J.; WAEE, Camden, N. J.; WAED, Harrisburg, Pa.; WAEC, Pittsburgh, Pa.; WAEB, Columbus, Ohio; WAEA, Indianapolis, Ind.; KGTR, St. Louis, Mo.; KSY, Tulsa, Okla.; KSW, Amarillo, Texas; KSX, Albuquerque, New Mexico; KGPL, Kingman, Arizona; KGTJ, Las Vegas, Nevada; KSI, Los Angeles, Calif.; KGTD, Wichita, Kansas, and KST, Kansas City, Missouri.
86.00	Same as 53.25 meters.
94.3	United Air Lines stations.
94.52	Same as 53.53 meters.
96.77	Same as 54.00 meters.

IMPORTANT!

Your Stewart-Warner Radio Receiver is not guaranteed unless you have filled in and mailed the warranty card accompanying each set within ten days after the purchase of the set. Be sure and ask your dealer for this card if it does not accompany the set.

PLAINTIFFS' EXHIBIT NO. 93, Sheet 25.
428-429

PLAINTIFFS' EXHIBIT NO. 93, Sheet 26. 430-431

See the Amazing

STEWART-WARNER
ELECTRIC REFRIGERATORS

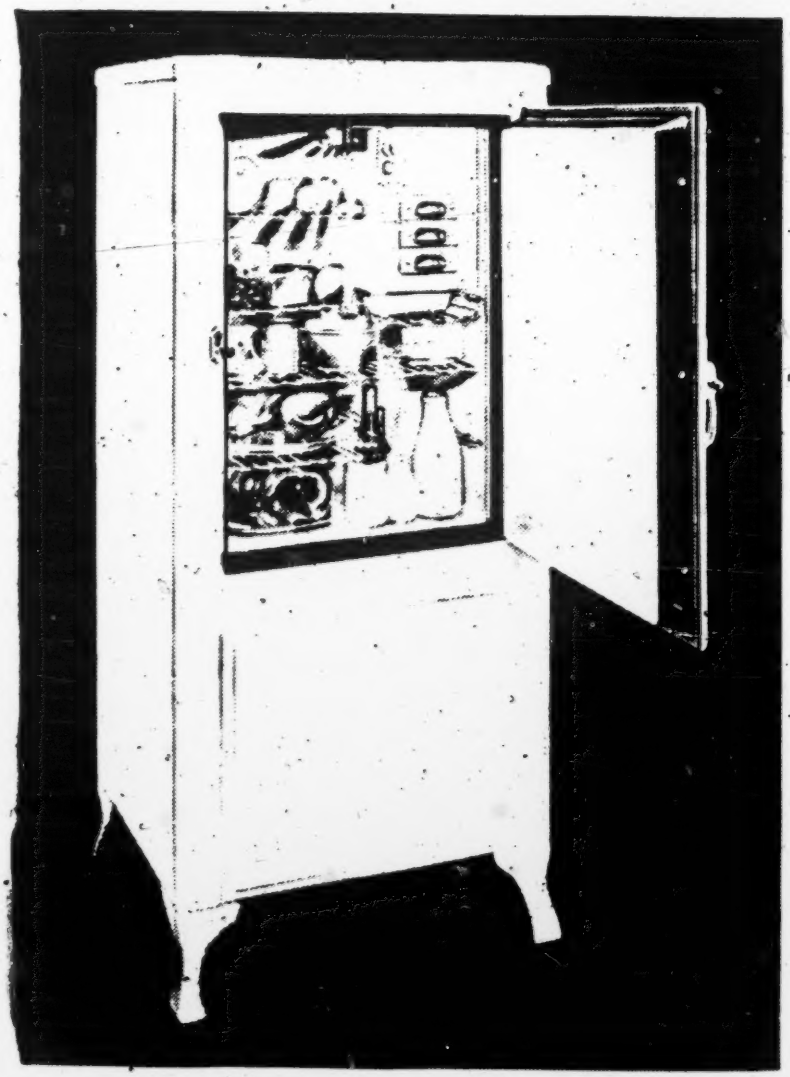

before you buy any refrigerator anywhere at any price. Then you will realize that this great organization, world famous for quality manufacturing, has devoted its vast resources to producing the greatest dollar-for-dollar value on the market today.

Sparkling in beauty—brimming with the latest conveniences, these superb refrigerators have every essential that must be in the finest, up-to-date electric refrigerator.

Yet prices are moderate—so much so that you cannot afford to overlook these supreme values! Be sure to see them NOW at your Stewart-Warner dealer's store!

OUTSTANDING FEATURES

Fast-freezing Unit—8-Point Cold Control—Silent Motor—Generous porcelain interior—Automatically lighted food compartment—Massive rubber-valve air-tight sealed door—Two-tone hardware—Heavy insulation.

Four Handsome Models Made to Meet Every Requirement of Home Refrigeration at Sensationally Low Prices!

Ask Your Dealer for a Demonstration

FORM 5619—8-1-32

PRINTED IN U. S. A.

Circuit Data for Stewart-Warner A. C. Series R-106

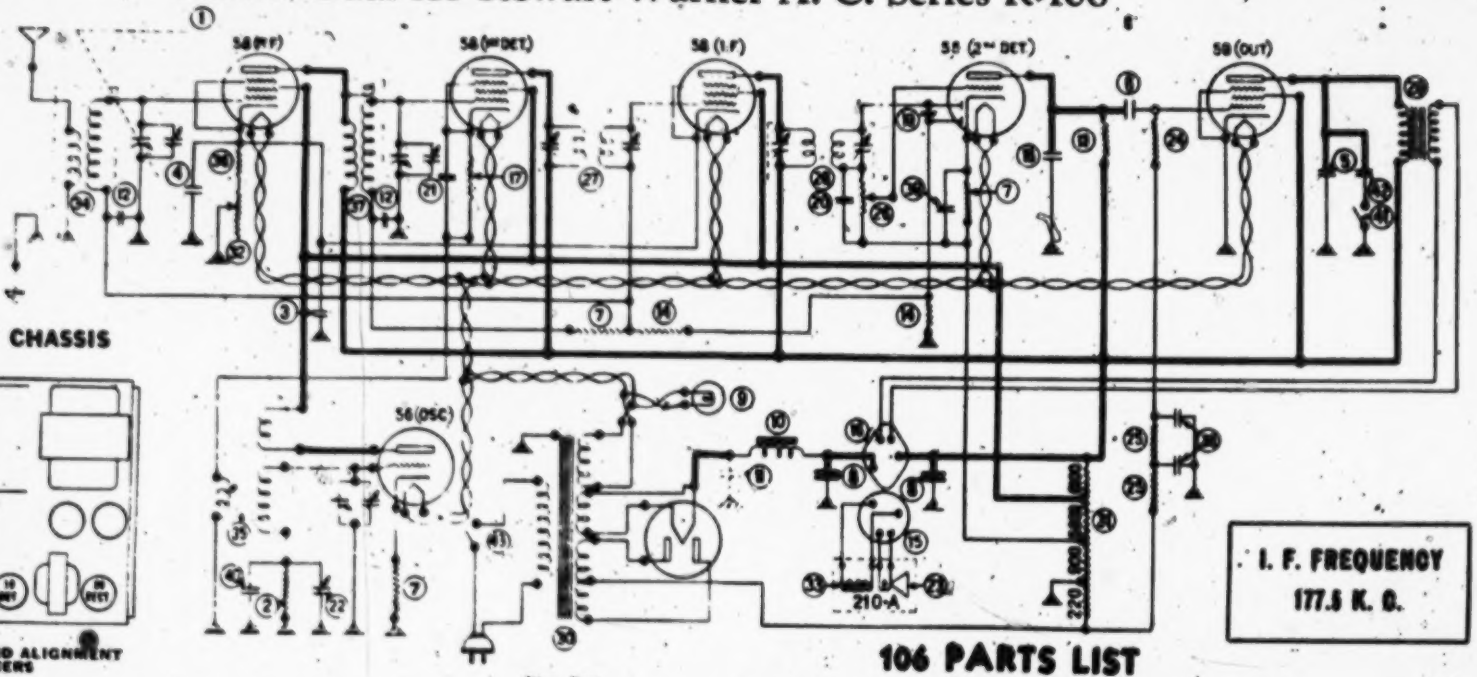

FRONT OF CHASSIS

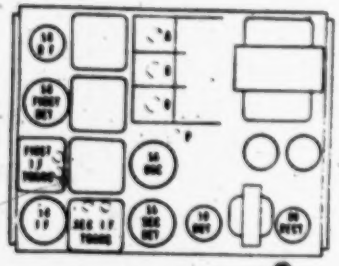

TUBE LAYOUT AND ALIGNMENT TRIMMERS

I. F. FREQUENCY
177.5 K. C.

PLAINTIFF'S EXHIBIT NO. 93, Sheet 27

(Circuit Data for Stewart-Warner A.C. Series R-106)

716
432
433

VOLTAGE TABLE

LINE VOLTAGE 115 — VOLUME AND SENSITIVITY CONTROLS FULL ON

Tube Circuit	Type of Tube	Filament Voltage	Plate Voltage*	Screen Grid Voltage	Bias Voltage
56	R. F.	2.29	245	97	3.1
56	Osc.	2.28	97		9.3
56	1st Det.	2.28	245	97	
56	I. F.	2.26	245	97	3.1
55	2nd Det.	2.24	66		7.9
59	Output	2.24	229	245	17.4
80	Rect.	4.78			

All D. C. voltages measured with respect to ground, using high resistance voltmeter of 1000 ohms per volt. Readings will vary, depending upon voltage range of meter, being higher for higher range instruments. This variation is most marked for second detector plate voltages.

*This reading taken between negative end of voltage divider and chassis.

106 PARTS LIST

Illus. No.	Part No.	Description	List Price
1	67248	3 gang tuning condenser	3.50
2	67239	13,000 ohm, ½ w. carbon res.	.25
3	67291	.1 mf., 200 v. tubular cond.	.50
4	67297	.25 mf., 200 v. tubular cond.	.40
5	67298	.01 mf., 600 v. tubular cond.	.30
6	67299	.02 mf., 600 v. tubular cond.	.30
7	67283	2,000 ohm, ½ w. carbon res.	.25
8	67328	8 mf., 160 v. electrolytic cond.	1.75
9	67331	2.5 volt pilot lamp	.25
10	67301	Filter choke coil	2.00
11	67288	8 mf., 300 v. electrolytic cond. (For 25 cycle sets only)	1.00
12	67282	.05 mf., 200 v. tubular cond.	.25
13	67258	100,000 ohm, 1 w. carbon res.	.25
14	67259	1 megohm, ½ w. carbon res.	.25
15	67271	Speaker cable only	.40
	67272	Speaker cable and plug	.60
	81092	Speaker plug only	.20
16	81032	Speaker socket	.20
17	81137	[illegible] ohm, ½ w. carbon res.	.25
18	81138	[illegible].5 mf. platail mica cond.	.25
19	81136	.001 mf. platail mica cond.	.30
20	81137	.00025 mf. platail mica cond.	.30
21	81140	.1 mf., 200 v. tubular cond. & bracket	.25
22	81231	Thrift. pad trimming cond.	.30
23	81276	Diaphragm (R210) and R1.211A)	2.75
24	81279	Diaphragm & shell (R1211)	2.75
25	81301	150,000 ohm, ½ w. carbon res.	.25
26	81302	60,000 ohm, ½ w. carbon res.	.25
27	81101	300,000 ohm volume control	.75
	81310	1st I. F. trans. assembly	2.00
	81309	Double I. F. trim. cond. only	.60
	81231	I. F. transformer coils only	1.00
28	81311	2nd I. F. trans. assembly	2.00
	81309	Double I. F. trim. cond. only	.60
	81231	I. F. transformer coils only	1.00
29	81313	Single speaker output trans.	2.75
	81396	Twin speaker output trans.	2.75
30	81325	115 v., 60 cy. power trans.	8.00
	81371	115 v., 25 cy. power trans.	10.00
	81374	105-230 v., 30-60 cy. power trans.	12.00
31	81380	Voltage divider (4 tap) res.	1.15
32	81321	6,000 ohm sensitivity control & switch	1.50
33	81332	R2104 speaker field coil (2000 ohms)	1.50
	81063	2115 speaker field coil (160 ohms)	1.50
34	81330	R. F. tuning coil	1.50
35	81329	Oscillator tuning coil	1.50
36	81368	200 ohm, ½ w. resistor	.25
37	81330	Plate detector tuning coil	1.50
38	81369	.25 mf., 200 v. shielded, cond. (in case)	1.50
39		.25 mf., 200 v. shielded, cond. (case)	
		.1 mf., 200 v. shielded, cond. (can)	
40	81392	.0075 mf. sensitiv. pad. cond.	.25
41	81616	Tone control switch only	.25
42	81618	.01 mf., 600 v. tubular cond.	.25
43		Power switch (mtd. on 81330)	

PARTS NOT SHOWN IN DIAGRAM

Part No.	Description	List Price
81366	R. F. tube shield shell	.50
81369	R. F. tube shield cover	.50
67961	1st det. & I. F. tube shield	.50
81213	R. F. coil shield (with hole)	.50
67326	R. F. coil shield (plain)	.50
81212	I. F. coil shield	.50
67712	Cisco cond. rubber pad	.25
67711	Cisco cond. rubber washer	.25
67236	Dial drive rubber bushing	.25
81392	Celluloid dial and frame	.50
67209	No. 16 x 3/8" chassis screw	.05
67067	1/4" diam. 1/4 hole washer	.05
81091	No. 0-32 x 1/4", speaker mtg. screw	.05
66725	No. 0-32 thin hex. nut	.05
67933	Escutcheon plate	.50
81226	Escutcheon wood screws ..... per 6	.25
81613	Large knob	.50
81612	Small knob	.50
66961	Felt washer for knobs	.05

SERVICE DATA FOR MODEL 106 CHASSIS

CIRCUIT DESCRIPTION

The Model 106 Stewart-Warner Radio Chassis is a seven tube superheterodyne receiver embodying three important features: (1) Interstation Noise Suppression; (2) "Q" or "Squelch" Circuit; (3) Delayed Automatic Volume Control Action. These desirable features are obtained thru the use of a 55 detector tube which functions as three tubes in one—two diode rectifiers and a triode amplifier. One diode is used for detection, the detected signal obtained in this way being then passed on to the grid of the triode part of the same tube where it is amplified at audio frequencies and fed into the pentode output tube. A constant negative bias is provided on this diode by means of a cathode resistor which prevents detection of signal or noise unless the incoming signal is above a certain minimum value, thus providing the "squelcher" or "Q" circuit. This circuit, in combination with a manually operated sensitivity control (No. 32 on the diagram) makes it possible to eliminate objectionable noise when tuning between stations, resulting in interstation noise suppression.

Delayed A. V. C. is obtained thru the second diode section of the 55 tube, which is coupled to the first by a .001 mfd. condenser. However, this diode plate is about 15 volts negative with respect to the cathode, so that no rectification and consequently no A. V. C. action can take place in this circuit unless the incoming signal builds up to this value, which represents the minimum signal capable of giving full audio output. Consequently no fading will be noticed throughout the range where the A. V. C. has hold. Furthermore, any station not capable of producing full output in the speaker, is not further reduced in volume by the action of the A.V.C. circuit, as is the case in normal A.V.C., so that with delayed A.V.C. weak stations come in with much better volume and the effects of severe fading are greatly minimized.

ALIGNING THE 106 CHASSIS

Alignment can be carried out intelligently only if the service man knows the general layout of the set, and how each circuit is affected during the process of alignment. The simplified top view of the chassis appearing on the other side of this sheet gives the layout of the receiver and locations of the various aligning adjustments. The following brief discussion of what actually happens during alignment should be carefully read, using the sketch as a basis before commencing the actual work.

LOCATION AND FUNCTION OF ALIGNING ADJUSTMENTS

The incoming signal is tuned first by the radio-frequency stage and then fed into the first detector circuit, where it is tuned again to improve selectivity. These circuits are brought into exact alignment by the two trimmer condensers "A" and "B," pointed out in the attached sketch. The tuned oscillator circuit is so designed that it tunes to a frequency exactly 177.5 K.C. higher than the incoming signal. This circuit is kept in exact step by means of two adjustments, the oscillator condenser trimmer "O," and the padding condenser "P," which can be reached thru a small hole in the chassis base just in back of the "O" condenser.

THE "O" TRIMMER IS MAINLY EFFECTIVE AT THE HIGH FREQUENCY END OF THE DIAL, AND THE PADDING CONDENSER "P" AT THE LOW FREQUENCY END. The alignment routine which will be outlined takes this into consideration.

The two intermediate frequency (I.F.) transformers are of the tuned input,—tuned output type and each winding is tuned by a separate trimmer condenser, making a total of four additional adjustments. The first I.F. transformer is in the shield at the right side of the set, while the second I.F. transformer is at the rear of the chassis. The I.F. trimmer adjusting screws can easily be reached thru two small holes at the top of each shield.

Form 5661 Printed in U.S.A.

PRELIMINARY STEPS IN ALIGNING

In aligning the Model 106 it is essential to use a high grade oscillator and sensitive output meter. The I.F. signal fed into the receiver must be very weak or it will cause the A.V.C. circuit to function, making correct alignment impossible. The output meter must be sufficiently sensitive to give a satisfactory reading with this low signal.

Before starting the alignment procedure see that the volume control and inter-station noise suppressor are full on, and the output meter connected either between the pentode plate and ground thru a .25 mfd condenser or across the voice coil, depending upon its sensitivity.

ALIGNING PROCEDURE

With this preliminary discussion clearly in mind, the actual alignment can be started. The following step-by-step routine should be followed for satisfactory results:

1. Set up the oscillator, and tune it to exactly 177.5 K.C. (This frequency can be accurately determined by tuning in a station at either 710 or 1420 K.C. and beating the 4th or 8th harmonic of the oscillator 177.5 K.C. signal against it. To be sure that you have the harmonic of the 177.5 K.C. signal, instead of some other frequency, tune in the other 177.5 harmonics on the broadcast dial. These should come in 177.5 K.C. on either side of the original setting. **Do not use the oscillator calibration curve to determine this intermediate frequency.**)

2. Connect the oscillator output across the grid clip of the first detector tube and ground.

3. Adjust the oscillator output to give about one-half full scale deflection of the output meter.

Adjusting the I. F. Circuits

1. Adjust all four I.F. trimmer condensers, in each case tuning carefully to make sure that maximum deflection is obtained on the output meter.

IT IS VERY IMPORTANT THAT ABSOLUTELY NO INWARD PRESSURE BE APPLIED TO THE ALIGNMENT TOOL, OR THE CONDENSER MAY SPRING BACK TO A DIFFERENT SETTING AS SOON AS THE TOOL IS REMOVED.

2. Go back and repeat all four adjustments since the adjustment of each I.F. trimmer affects the others to a certain extent, thus necessitating readjustment.

Adjusting R. F. and Oscillator Circuits

1. Twist the aerial and ground wires of the set together for their entire length to reduce noise pick-up. Connect the aerial wire to the output of the oscillator and ground both set and oscillator. Adjust the oscillator frequency to 1400 K.C. and carefully tune the receiver to give maximum output. Adjust the oscillator output to produce about one-half full scale deflection of the output meter.

2. Carefully tune the radio frequency stage "A" trimmer till the output meter reading reaches a maximum.

3. Retune the set and adjust the "B" first detector trimmer for maximum output. The oscillator, or "O" trimmer should not be touched unless the set is badly out of calibration at the high frequency end of the dial.

4. Set the oscillator at 600 K.C. and tune the set carefully to this frequency.

5. Adjust the oscillator padding condenser "P" for maximum output, RETUNING THE SET AFTER EACH CHANGE IN ADJUSTMENT. This is important.

6. Turn back the oscillator to 1400 K.C., tune the set to the same frequency, and very carefully readjust the "A" and "B" trimmer condensers to produce maximum output.

The receiver should now be perfectly aligned.

436-437

THIS PRINT SUPERSEDES ANY PRINT DATED PRIOR TO

IN-404

PLAINTIFFS' EXHIBIT No. 93, Sheet 29.
(Blueprint marked I.N. 404)

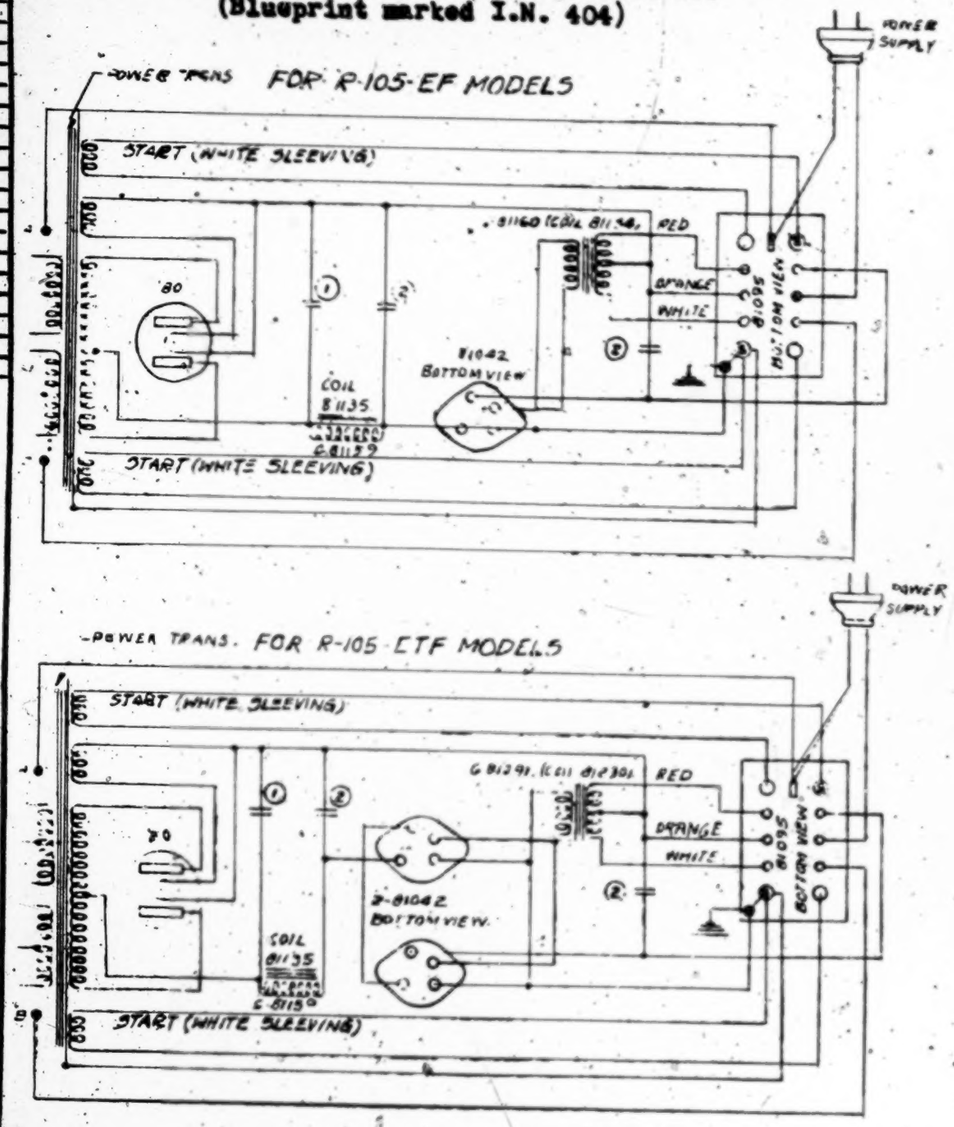

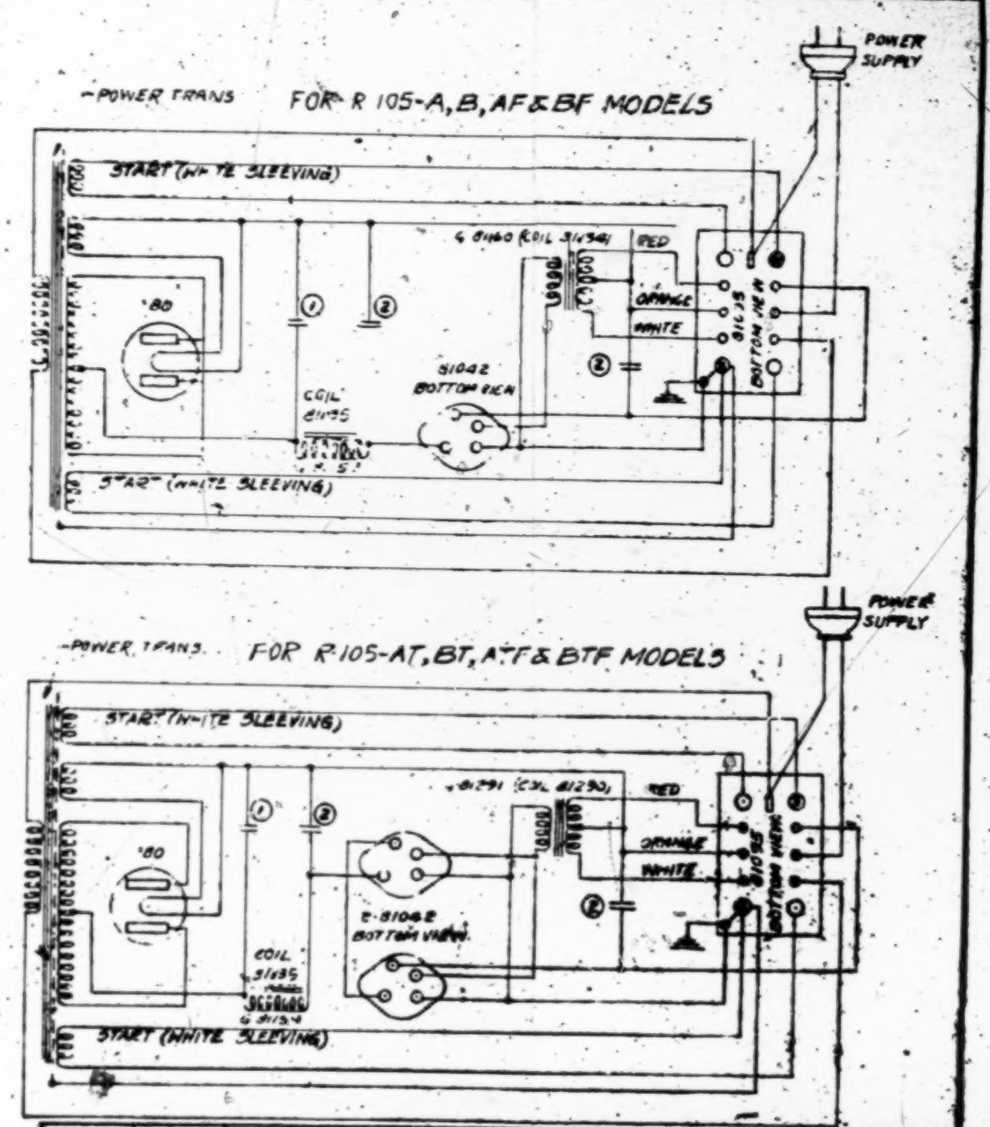

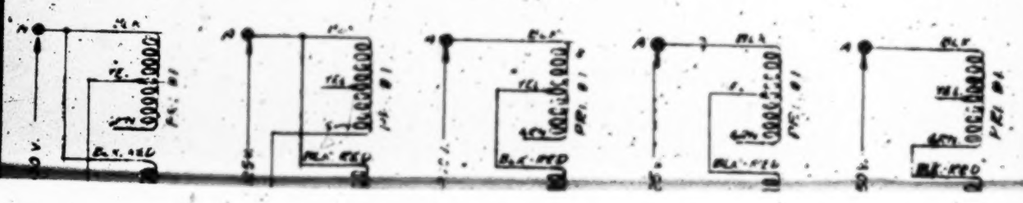

G-81477	60w 115V.	G-81360	G-81372	81347 0-485 V.	67328 0-440V.	MODEL	
G-81365	60w 115V.	G-81358	G-81372	81347 0-485V.	67328 0-440 V.	MODEL	
G-81400	60w 115V.	G-81359	G-81378	81347 0-485V.	67328 0-440V.	MODEL	
G-81364	25w 115V	G-81387	G-81373	81347 10-475-485V.	67328 0-440V.	MODEL	
G-81361	25w 115V.	G-81387	G-81373	81347 10-475-485V.	67328 0-440V.	MODEL	
G-81359	25w 115V	G-81387	G 81373	81347 10-475-485V.	67328 0-440V.	MODEL	
G-81363	60w 115V.	G-81243	G-81238	81347 0-485V.	67328 0-440V.	MODEL	
G-81296	60w 115V	G-81243	G-81238	81347 0-485V.	67328 0-440 V.	MODEL	
G-81250	60w 115V.	G-81243	G-81238	81347 0-485V.	67328 0-440V.	MODEL	

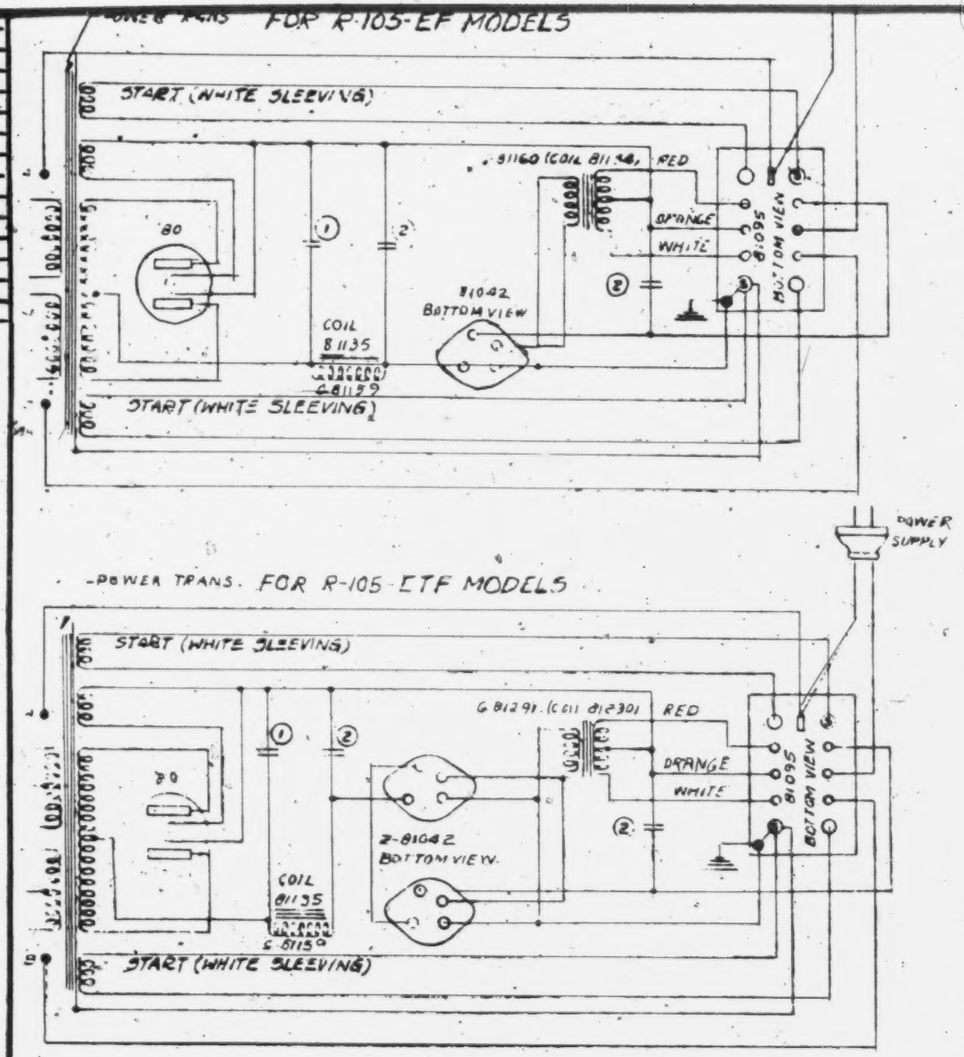

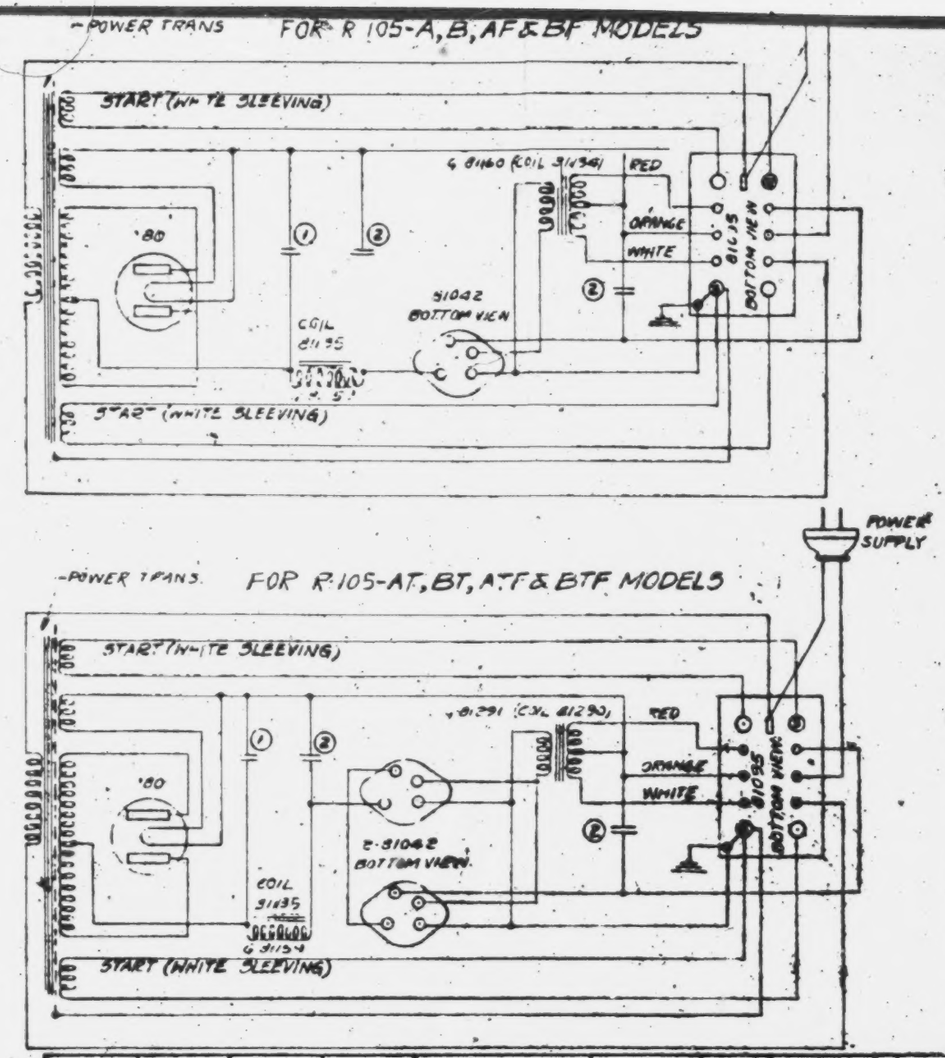

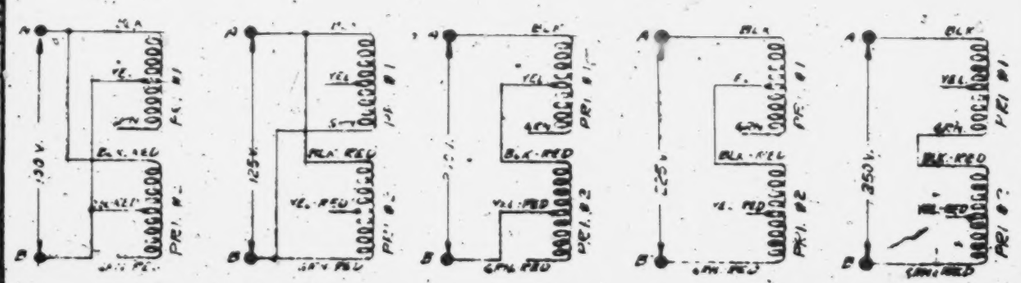

POWER TRANS. PRIMARY CONNECTIONS (CIRCUIT FOR R-105-EF & ETF MODELS.)

G-81477	60~ SPEC. VOLT.	G-81388	G-81372	81347 8-485 V.	67328 8-440 V.	MODEL	[illegible]
G-81365	60~ SPEC. VOLT.	G-81388	G-81372	81347 8-485 V.	67328 8-440 V.	MODEL	R 105-EF
G-81400	60~ SPEC. VOLT.	G-81388	G-81372	81347 8-485 V.	67328 8-440 V.	MODEL	R-105-EF
G-81364	25~ 115V	G-81387	G-81373	81367 10-475 485V.	67328 8-440 V.	MODEL	R 105-ETF
G-81361	25~ 115V.	G-81387	G-81373	81367 10-475 485V.	67328 8-440 V.	MODEL	[illegible]
G-81359	25~ 115V	G-81387	G-81373	81367 10-475 485V.	67328 8-440 V.	MODEL	[illegible]
G-81363	60~ 115V.	G-81243	G-81238	81347 8-485 V.	67328 8-440 V.	MODEL	R 105-AT
G-81296	60~ 115V	G-81243	G-81238	81347 8-485 V.	67328 8-440 V.	MODEL	[illegible]
G-81250	60~ 115V.	G-81243	G-81238	81347 8-485 V.	67328 8-440 V.	MODEL	[illegible]
CHASSIS	TYPE OF CHASSIS	POWER TRANS.	P. TRANS. COIL	COND.-① 1-USED	COND.-② 2-USED		

CIRCUIT DIAGRAM, POWER SUPPLY UNIT

8-19-52

L. WHE

IN 404

CAUTION

SIZE OF SHEET "A"

438—439

PLAINTIFFS' EXHIBIT No. 93, Sheet 30.
(Blueprint marked I.N. 422)

DEC 12 1933

IN-422

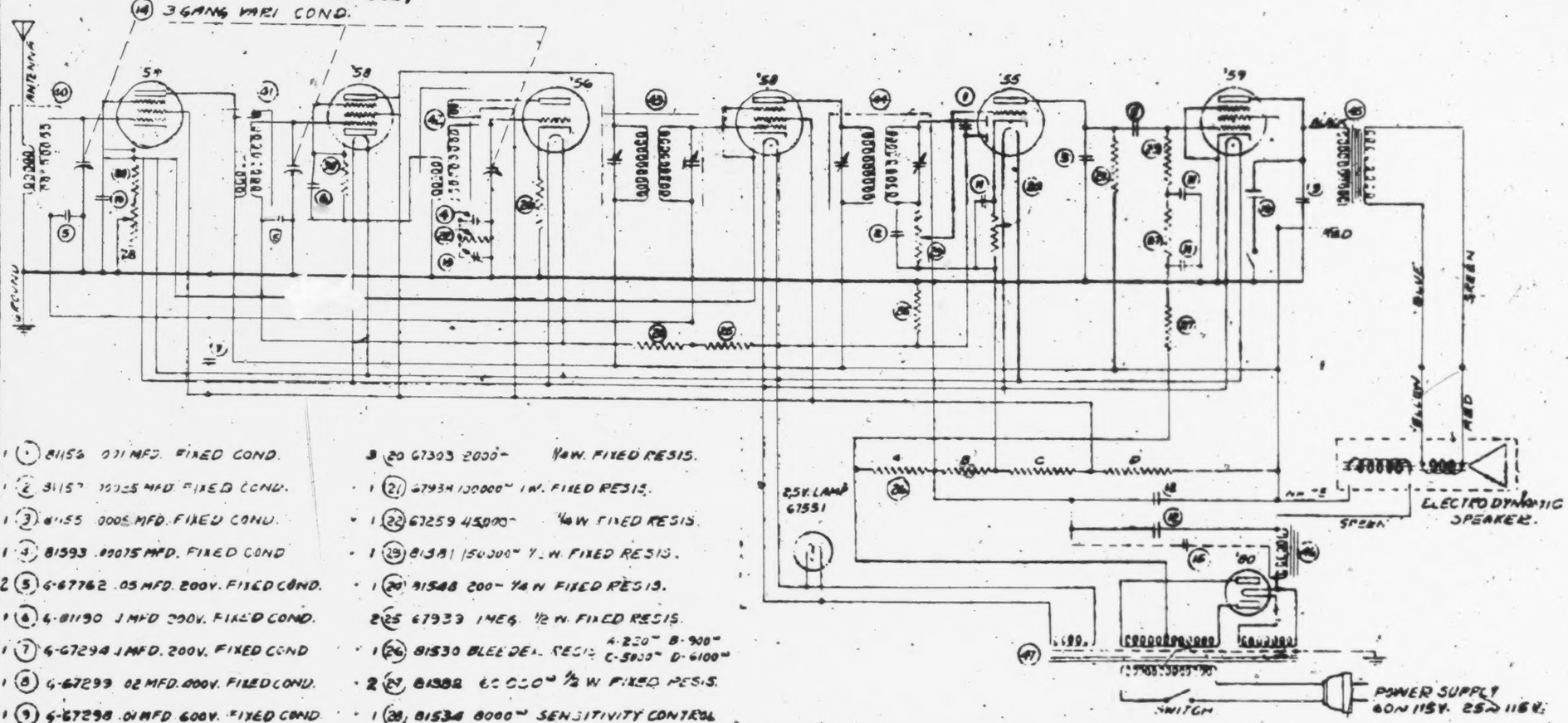

1 (1) 81156 .001 MFD. FIXED COND.
1 (2) 81157 .00025 MFD. FIXED COND.
1 (3) 81155 .0005 MFD. FIXED COND.
1 (4) 81593 .00075 MFD. FIXED COND
2 (5) G-67762 .05 MFD. 200V. FIXED COND.
1 (6) G-81190 .1 MFD 200V. FIXED COND.
1 (7) G-67294 .1 MFD. 200V. FIXED COND
1 (8) G-67299 .02 MFD. 400V. FIXED COND.
1 (9) G-67298 .01 MFD 600V. FIXED COND
1 (10) G-67297 .25 MFD. 200V. FIXED COND.
1 (11) G-81580 2-.25 & 1-1 MFD. 100V. FIXED COND.
2 (12) 67328 8 MFD. 440V. ELECTRO. COND.
1 (13) G-81231 TRIMMER COND.
1 (14) 67248 VARI TUNNING COND.
1 (15) 67588 8 MFD. 500V ELECTRO. COND. (25~ ONLY)
1 (16) G-81618 .04 MFD. 600V. FIXED COND.

3 (20) 67303 2000~ 1/4 W. FIXED RESIS.
1 (21) 67934 100000~ 1 W. FIXED RESIS.
1 (22) 67259 45000~ 1/4 W FIXED RESIS.
1 (23) 81381 150000~ 1/2 W. FIXED RESIS.
1 (24) 81548 200~ 1/4 W FIXED RESIS.
2 (25) 67933 1 MEG. 1/2 W. FIXED RESIS.
1 (26) 81530 BLEEDER RESIS A-220~ B-900~ C-5000~ D-6100~
2 (27) 81382 60000~ 1/2 W FIXED RESIS.
1 (28) 81534 8000~ SENSITIVITY CONTROL
1 (29) 81484 500000~ VOLUME CONTROL
1 (30) 81151 4000~ 1/2 W. FIXED RESIS.

1 (40) G-81538 "A" COIL ASSEM
1 (41) G-81550 "B" COIL ASSEM
1 (42) G-81539 OSCIL. COIL ASSEM.
1 (43) G-81510 1ST INTER. TRANS. ASSEM
1 (44) G-81511 2ND INTER. TRANS. ASSEM.
1 (45) G-81513 OUTPUT TRAN G-81512 COIL
1 (46) G-67584 CHOKE 67482 COIL
1 (47) G-81525 60~ 115V. PWR TRANS. G-81523 COIL
G-81574 25~ 115V. PWR. TRANS. G-81568 COIL
G-81574 50~ 105 125 210 230-250V. PWR. TRANS. G-81573 COIL.

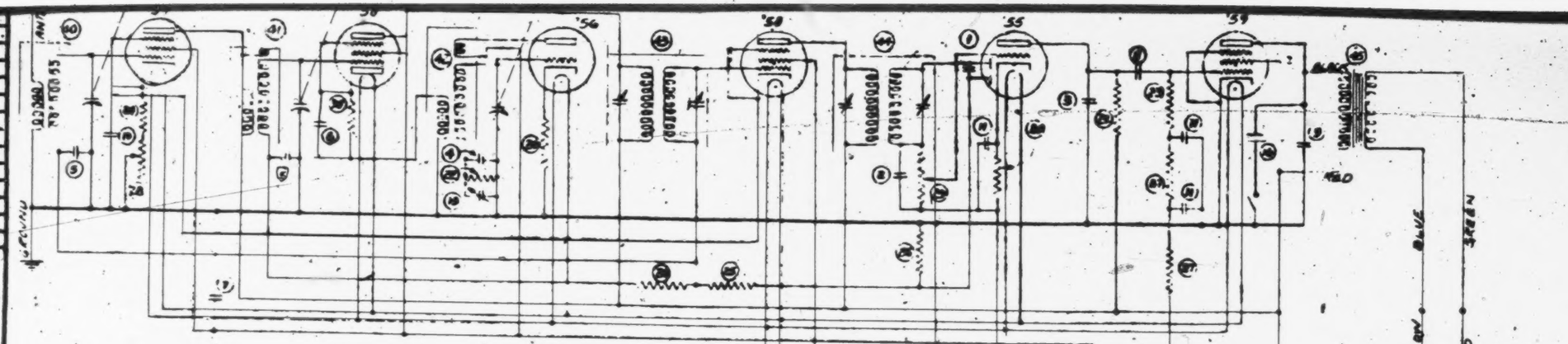

1	(1) 81156 .031 MFD. FIXED COND.	3	(20) 67303 2000Ω 1/4W. FIXED RESIS.
1	(2) 81157 .00125 MFD. FIXED COND.	1	(21) 67934 100000Ω 1W. FIXED RESIS.
1	(3) 81155 .0005 MFD. FIXED COND.	1	(22) 67259 45000Ω 1/4W FIXED RESIS.
1	(4) 81393 .00075 MFD. FIXED COND	1	(23) 81581 150000Ω 1/2W. FIXED RESIS.
2	(5) 6-67762 .05 MFD. 200V. FIXED COND.	1	(24) 81548 200Ω 1/4W FIXED RESIS.
1	(6) 6-81190 1 MFD 200V. FIXED COND.	2	(25) 67933 1MEG. 1/2 W. FIXED RESIS.
1	(7) 6-67294 1 MFD. 200V. FIXED COND	1	(26) 81530 BLEEDER RESIS. A-220Ω B-900Ω C-5000Ω D-6100Ω
1	(8) 6-67293 .02 MFD. 400V. FIXED COND.	2	(27) 81582 60,000Ω 1/2 W FIXED RESIS.
1	(9) 6-67298 .01 MFD 600V. FIXED COND.	1	(28) 81534 8000Ω SENSITIVITY CONTROL
1	(10) 6-67297 .25 MFD. 200V. FIXED COND.	1	(29) 81484 500000Ω VOLUME CONTROL
1	(11) 6-81580 2-.25 & 1-1 MFD. 100V. FIXED COND.	1	(30) 81151 4000Ω 1/2 W. FIXED RESIS.
2	(12) 67328 8MFD. 440V. ELECTRO. COND.		
1	(13) 6-81231 TRIMMER COND.		
1	(14) 67248 VARI TUNING COND.		
1	(15) 67598 8MFD. 500V ELECTRO. CANS (25~ ONLY)		
1	(16) 6-81618 .04 MFD. 600V. FIXED COND.		

1	(40) 6-81538 "A" COIL ASSEM
1	(41) 6-81550 "B" COIL ASSEM
1	(42) 6-81539 OSCIL. COIL ASSEM.
1	(43) 6-81510 1ST INTER. TRANS. ASSEM
1	(44) 6-81511 2ND INTER. TRANS. ASSEM.
1	(45) 6-81513 OUTPUT TRANS. 6-81512 COIL
1	(46) 6-67584 CHOKE 67482 COIL
1	(47) 6-81525 60W 115V. PWR. TRANS. 6-81523 COIL 6-81574 25W 115V. PWR. TRANS. 6-81368 COIL 6-8574 50W 105 125 210 230-250V. PWR. TRANS. 6-81573 COIL.

POWER TRANS. PRIMARY CONNECTIONS FOR R-106-E MODELS.

CAUTION

CIRCUIT DIAGRAM. R-106 A-B-E

NUMBER IN-422

STEWART-WARNER «» SERIES 60

Chassis 106A, B, & E

INSTRUCTIONS

ANTENNA SYSTEM

Satisfactory radio reception is more dependent upon a proper antenna-ground installation than upon any other factor outside of the set itself. It is the function of the antenna system to collect the minute energy radiated by the broadcast station and carry it to the set. Therefore if you wish to insure yourself consistent and enjoyable reception it is quite important to install a suitable antenna system to pick up and carry the radio signal to your set.

The most satisfactory aerial for any particular location will vary widely depending upon local structural details and sources of interference. As a general rule, a good outside aerial from fifty to seventy-five feet long including lead-in will give best results.

The aerial proper should consist of a length of copper wire insulated at each end with a glazed porcelain or glass insulator. It should be erected as far as possible from buildings, trees, and other obstructions. Do not run it alongside of electric wires, a tin roof, or any metallic structure. Avoid placing the aerial above or below exposed wires installed by the electric light or telephone company.

Where it is not possible to erect an outside aerial, an inside one consisting of sixty feet of insulated wire led around the picture molding of the room makes a fair substitute.

LEAD-IN

The lead-in from the outside aerial should consist of a heavily insulated copper wire. In certain locations where noisy reception is experienced due to interference from electrical machinery in the vicinity of the set, shielded lead-in wire may prove helpful in reducing interference. In extreme cases, special types of aerials and lead-ins designed to balance out interference may be erected. See your local dealer for further information on this point.

INSTALLATION OF GROUND

The ground connection is just as important as the aerial.

In a great number of installations a satisfactory ground can be made by connecting to a cold water pipe. This connection should be made by soldering the wire directly to the pipe or by some approved form of ground clamp. The pipe should be thoroughly cleaned and all paint and corrosion removed at the point at which the connection is made. Radiators may also be used for grounds, but do not always give good results.

Very frequently, when the wiring of a home conforms to underwriters' specifications so that all conduit piping is grounded a wire fastened to the metal plate of a base-board outlet makes a satisfactory ground.

HOW TO CONNECT THE SET

Before connecting up the set, be sure that your home is wired for the voltage and current for which the set is designed as indicated on the name plate on the rear of the chassis. If you are in doubt, call up your local power company for the necessary information. Connecting the set to a supply outlet furnishing the wrong type of current will result in improper operation or damage.

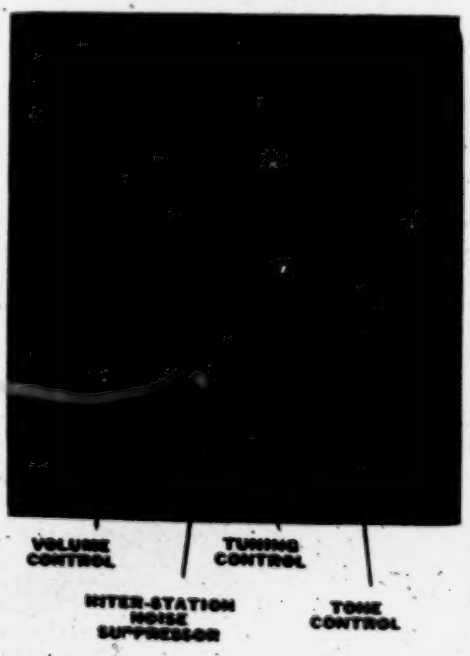

Your radio receiver is designed to operate at 115 volts. If the voltage in your home rises above 120 volts, you should purchase a suitable voltage regulator to reduce the line voltage to the proper value so that your radio tubes will give you satisfactory service.

Installation of the set can best be accomplished in the following manner:

1. Remove the packing material holding the tubes in position. Note that some of the tubes have metal caps over which are fitted small clips. **Be sure the metal clips are fitted over the caps, and do not touch the tube shields.**
2. Connect the aerial to the blue wire extending from the back of the chassis. The ground should be connected to the black wire.
3. Plug the extension cord of the set into the most convenient socket.

TUNING INSTRUCTIONS

—Refer to the illustration before attempting to tune the set for the first time.

1. Turn on the set by turning the lower center control knob all the way to the right (clockwise).

2. Turn the left hand (volume) control about half-way to the right.

3. Wait a few seconds for the tubes to warm up. There should be a slight rushing or crackling sound coming from the speaker to indicate the set is ready to be operated.

If the crackling sound is not heard, turn the volume control further toward the right; if it is too loud, turn the volume control to the left.

4. Now turn the center tuning control slowly to bring in stations. You will notice that each station occupies a certain amount of space on the dial in which its volume remains fairly constant. Move the tuning pointer forward and back to determine the width of this space, and then finally set the pointer exactly in the center. This point will give you best tone quality.

5. If too much noise is heard between stations while the set is being tuned, turn the inter-station noise suppressor control (see illustration) back to the left (counter-clockwise direction) until this noise is eliminated.

It will be found that when the inter-station noise suppressor is turned toward the left, volume on received stations will be reduced somewhat, so that it will be necessary to advance the volume control to the right.

In using the inter-station noise suppressor, bear the following in mind:

(a) When tuning the set, the noise suppressor control is normally turned all the way to the right. However, if the noise between stations is too great, it should be turned just far enough to the left until the noise ceases.

(b) The inter-station noise suppressor will not in any way affect noises that come in with the station.

(c) Only the very strongest stations will be brought in with the inter-station noise suppressor control in the left-hand position. As it is progressively rotated toward the right (clockwise direction) it will be found possible to tune in weaker and weaker stations. When tuning for the very weakest stations, turn this control all the way to the right.

(d) Certain stations that happen to come in with a volume about equal to the noise being suppressed will be distorted. To bring in such stations without distortion reduce the noise suppressing action by turning the control to the right until reception clears up.

6. After the desired station is tuned in correctly, the tone control may be adjusted to suit the individual requirements of the listener.

In addition to regulating tone, the tone control has a very important function in reducing static and those interference noises created by the operation of electrical machinery. As it happens, these crackling and frying noises are very largely composed of the higher tones, so that turning the tone control to the right minimizes this interference to a very great extent.

7. The number system on the dial of your radio receiver is conveniently calibrated to indicate broadcasting station frequencies in kilocycles. However, the final zero has been omitted from the dial numbers, so that dial number 110 corresponds to 1100 kilocycles, dial position 55 to 550 kilocycles, and so on.

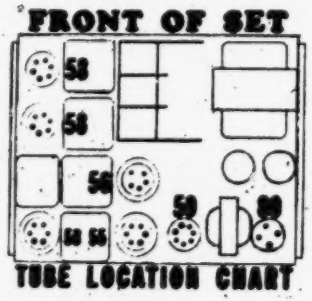

TUBE LOCATION CHART

8. It may be noticed occasionally when listening to distant stations that the background noise increases and decreases in a regular fashion, although the program itself does not fluctuate in volume. This is due entirely to fading of the incoming wave. The automatic volume control prevents any change in volume, but as the signal tends to fade out, the sensitivity of the set automatically increases, and the static that is always present becomes greater in proportion to this weaker signal so that it is heard more loudly.

TUBES USED

Seven tubes are used. Their type numbers and positions in the set are shown in the tube location diagram.

IMPORTANT!

Your Stewart-Warner Radio Receiver is not guaranteed unless you have filled in and mailed the guarantee registration card accompanying each set within ten days after the purchase of the set. Be sure and ask your dealer for this card if it does not accompany the receiver.

WARRANTY

This is to certify that we, the STEWART-WARNER CORPORATION, Chicago, Illinois, warrant the Stewart-Warner Model R-106 Radio Receiver manufactured by us, to be free from defects in material and workmanship under normal use and service, our obligation under this warranty being limited to repairing or replacing, through an accredited Stewart-Warner distributor, any part or parts of said product that in our judgment show evidence of such defect provided that said product shall have been registered with us at the time of purchase; and provided further, that said product shall be returned to the distributor, transportation prepaid, within 90 days from the date of delivery thereof by the dealer to the purchaser.

This warranty is expressly in lieu of all other warranties, expressed or implied, and of all other obligations on our part, and no representative or other person is authorized or permitted to make any warranty or assume for this corporation any liability not strictly in accordance with the foregoing.

This warranty shall not apply to any product which has been tampered with or altered in any way, or which has been subjected to misuse, negligence or accident, or which has the serial number altered, effaced or removed.

We make no warranty whatsoever in respect to accessories or parts not manufactured by us, as they are usually warranted by their respective manufacturers.

IN WITNESS WHEREOF, this warranty is endorsed by the

Stewart-Warner Corporation, Chicago

Form 5637 Printed in U.S.A.

Circuit Data for Stewart-Warner Chassis Series 108 and 108-X

Used on Models 10 to 20 Inclusive

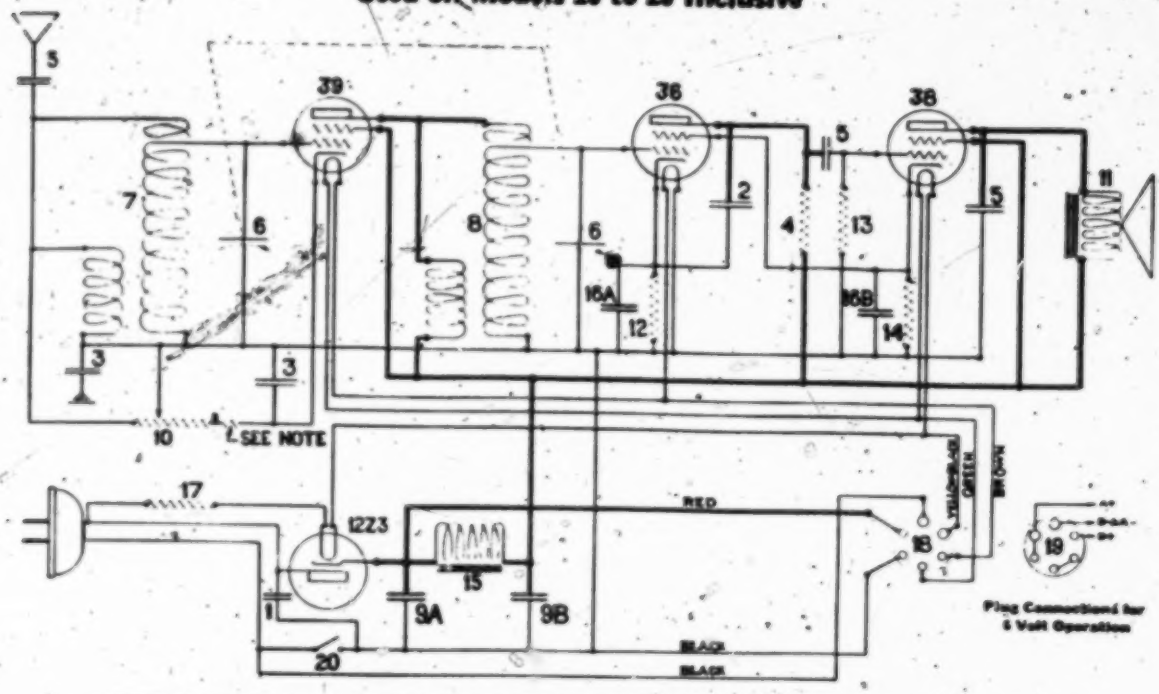

NOTE: In some receivers, a 140 ohm, ¼ watt carbon resistor, part 81646 is connected in series with the volume control; in other sets this resistor is built into the volume control.

LINE VOLTAGE * 115 VOLTS A. C. **Voltage Table** * VOLUME CONTROL FULL ON

Type of Tube	Tube Current	Filament to Condenser	Plate to Condenser	Screen Grid to Condenser	Cathode to Condenser
39	R. F.	** (See Note)	107	107	1.5
36	Det.	** (See Note)	1.3†	9	1.3
38	Output	** (See Note)	103	107	9
12Z3	Rect.	** (See Note)			122

IMPORTANT NOTE

*These voltages will be obtained when the set is operated at 115 volts, 60 cycles A. C. For D. C. operation, voltages will be somewhat lower. All voltage readings have been taken between tube prongs and the variable condenser frame, *not the chassis*. The chassis cannot be used in this receiver as a reference point for voltage readings.

**Filament voltage readings will vary widely, depending upon the resistance of the A. C. voltmeter. With high resistance rectifier type meters, voltage readings will be approximately 6.3 for the detector and amplifier tubes, and 12.6 for the 12Z3 rectifier. With ordinary A. C. Voltmeters, readings will be very much less.

†This reading is obtained with a 30-volt scale, one thousand ohms per volt instrument. Higher resistance meters or higher scale readings will give greater voltage readings.

FRONT OF CHASSIS

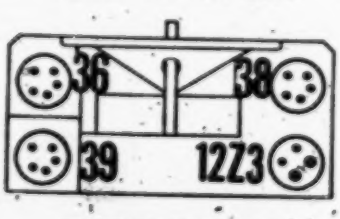

TUBE LOCATIONS

PARTS LIST

Diag. No.	Part No.	Description	List Price
1	67298	.01 mfd. 600 V cartridge condenser	$0.30
2	81158	.0001 mfd. mica condenser	.22
3	81630	.1 mfd. 100 V cartridge condenser	.30
4	81611	2.1 meg. ½ W. carbon resistor	.20
	81616	140 ohm ½ W. carbon resistor	.20
5	81657	.003 mfd. mica condenser	.35
6	81662	Variable condenser	3.00
7	81661	Antenna Coil	.90
8	81666	Detector Coil	1.20
9A, 9B	81678	4 mfd. 150 V dry electrolytic condensers in one unit	1.35
10	81679	250,000 ohm volume control and switch	1.50
11	81680	Speaker	5.00
12	81681	20,000 ohm ½ W. carbon resistor	.20
13	81682	1.1 meg. ½ W. carbon resistor	.20
14	81683	1600 ohm ½ W. carbon resistor	.20
15	81691	Filter choke	2.00
16A, 16B	81698	5 mfd. 20 V dry electrolytic condensers in one unit	1.20
17	81735	Power cord assembly	1.30
18	81831	Battery cable socket	.10
19	81861	6 volt battery cable	.90
	81863	12 volt battery cable	
	81865	32 volt battery cable	1.15
20	.....	Switch on back of 81679	

PARTS NOT LISTED ON DIAGRAM

81885	Bronze tuning knob	.35
81886	Bronze volume control knob	.35
81887	Gold tuning knob	.35
81888	Gold volume control knob	.35
81889	Silver tuning knob	.35
81890	Silver volume control knob	.35
81891	Book model knob	.35
81821	Antenna reel	.25
81841	Antenna reel clip	.02
81712	Bronze receiver housing	4.00
81713	Bronze housing back	.60
81731	Gold receiver housing	4.00
81728	Gold housing back	.60
81735	Silver cabinet housing	4.00
81732	Silver housing back	.60
81884	Automobile mounting bracket	.30

Form 5466 Printed in U. S. A.

REVISIONS

THIS PRINT SUPERSEDES ANY PRINT DATED PRIOR TO

IN426

PLAINTIFFS' EXHIBIT No. 93, Sheet 34.
(Blueprint marked I.N. 426)

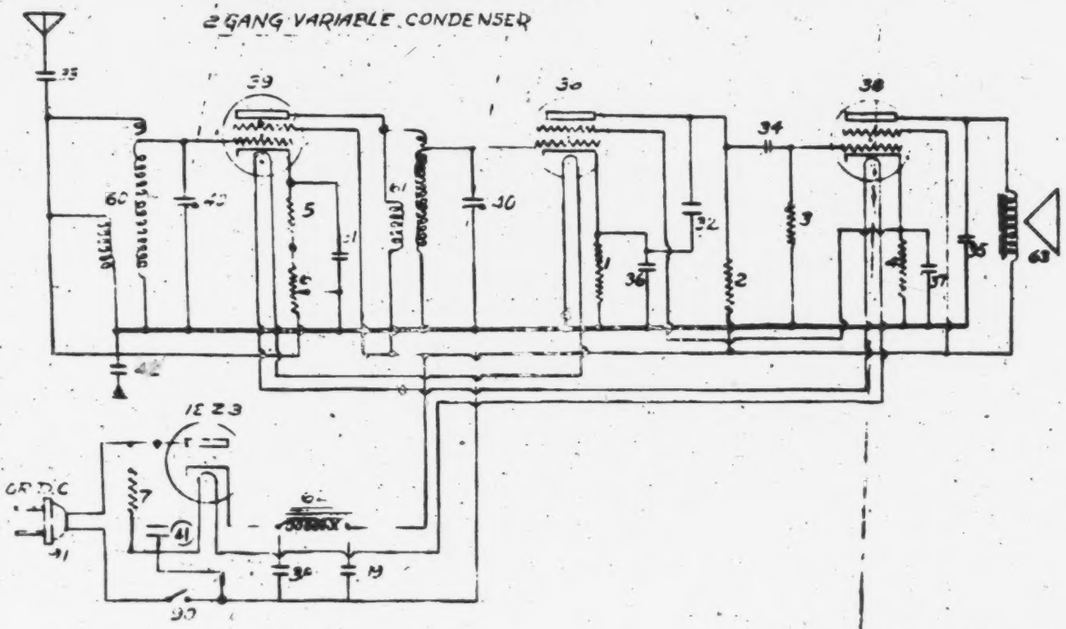

(1)	8163	23000W	±25%	1/4 WATT	FIXED RESISTOR
(3)	[illegible]	2.1 MEG	±25%	1/4 WATT	FIXED RESISTOR
[illegible]	81682	1.1 MEG	±25%	1/4 WATT	FIXED RESISTOR
(4)	8163	1600	±25%	1/2 WATT	FIXED RESISTOR
(5)	8164	40 W	±25%	1/4 WATT	FIXED RESISTOR
(6)	81[illegible]	[illegible]	[illegible]	[illegible]	[illegible]
[illegible]	[illegible]	[illegible]	[illegible]	[illegible]	[illegible] WATT
[illegible]					
(31)	8163	.1 MFD	10 V	FIXED	CONDENSER
(32)	8115[illegible]	.000	FIXED	MICA	CONDENSER
(33)	8 657	.003	FIXED	MICA	CONDENSER
(34)	8165[illegible]	.003	FIXED	MICA	CONDENSER
(35)	8 157	.003	FIXED	MICA	CONDENSER
(36)	8167[illegible]	5 MFD.	20V	ELECTROLYTIC CONDENSER	SAME UNIT
(37)	8167[illegible]	5 MFD	20V	ELECTROLYTIC CONDENSER	SAME UNIT
(38)	8167	4 MFD.	150V	ELECTROLYTIC CONDENSER	SAME UNIT
(39)	81679	4 MFD	150V	ELECTROLYTIC CONDENSER	SAME UNIT

40 81662 VARIABLE CONDENSER
(41) 67298 .01 MFD. 600V FIXED CONDENSER
(42) 67298 .01 MFD. 600 V. FIXED CONDENSER
(60) 81664 ANTENNA COIL ASSEMBLY
(61) 81660 DETECTOR COIL ASSEMBLY
(62) 81694 FILTER CHOKE ASSEMBLY
(63) 81680 MAGNETIC SPEAKER
(90) [illegible] SWITCH ON BACK OF 81679
(91) 81695 POWER CORD ASSEMBLY

CAUTION

CIRCUIT DIAGRAM FOR R-108

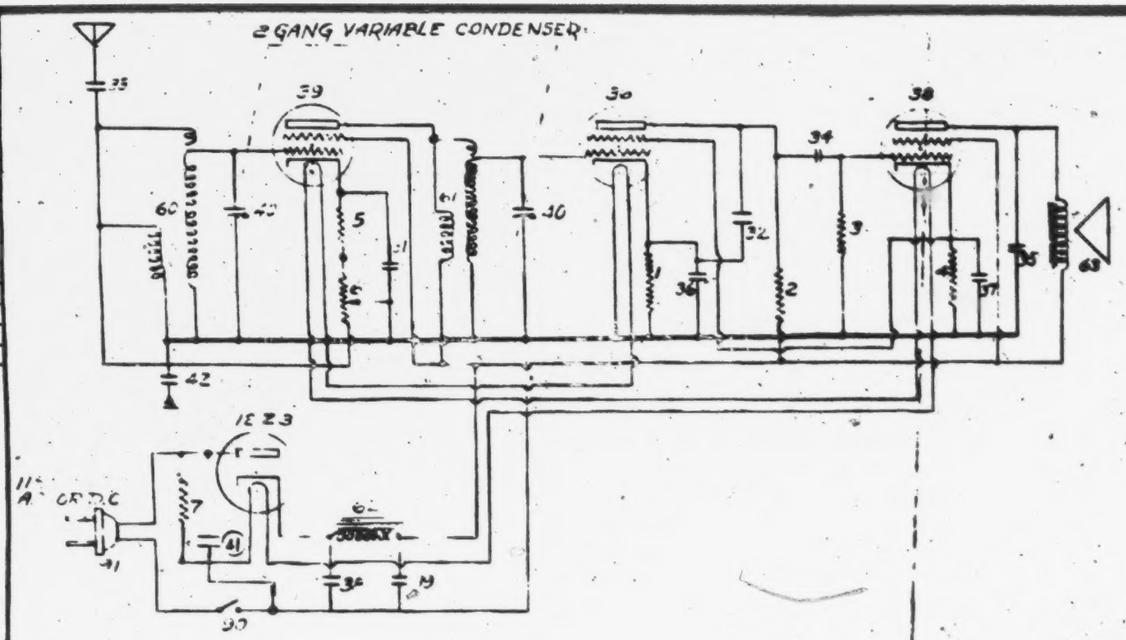

(1)	8165	23000W ±26	1/4 WATT	FIXED	RESISTOR
(3)	[illegible]	2.1 MEG ±25%	[illegible]	FIXED	RESISTOR
[illegible]	81662	1.1 MEG ±25%	[illegible]	FIXED	RESISTOR
(4)	8163	1600 [illegible] ±25%	1/2 WATT	FIXED	RISISTOR
[illegible]	8164	40 [illegible] ±25%	1/4 WATT	FIXED	RESISTOR
[illegible]	[illegible]	[illegible]	[illegible]	[illegible]	[illegible]
[illegible]	[illegible]	[illegible]	[illegible]	[illegible]	[illegible]
[illegible]					
(31)	8163	.1 MFD	10 V	FIXED	CONDENSER
(32)	8165	.000	FIXED	MICA	CONDENSER
(33)	8357	.003	FIXED	MICA	CONDENSER
(34)	8165	.003	FIXED	MICA	CONDENSER
(35)	8157	.003	FIXED	MICA	CONDENSER
(36)	8165	5 MFD.	20V	ELECTROLYTIC CONDENSER	SAME UNIT
(37)	8165	5 MFD	20V	ELECTROLYTIC CONDENSER	SAME UNIT
(38)	8167	4 MFD	150V	ELECTROLYTIC CONDENSER	SAME UNIT
(39)	81679	4 MFD	150V	ELECTROLYTIC CONDENSER	SAME UNIT

40 81662 VARIABLE CONDENSER
(41) 67298 .01 MFD. 600V FIXED CONDENSER
(42) 67298 .01 MFD. 600 V. FIXED CONDENSER
(60) 81664 ANTENNA COIL ASSEMBLY
(61) 81660 DETECTOR COIL ASSEMBLY
(62) 81694 FILTER CHOKE ASSEMBLY
(63) 81680 MAGNETIC SPEAKER
(90) [illegible] SWITCH ON BACK OF 81679
(91) 81695 POWER CORD ASSEMBLY

CAUTION

SIZE OF SHEET "48"

CIRCUIT DIAGRAM FOR R108

DEC 23, 1932

IN426

STEWART-WARNER CORPORATION, CHICAGO, U.S.A.

STEWART-WARNER
CHASSIS MODEL 108
INSTRUCTIONS

The Stewart-Warner Model 108 Compact Radio Receiver is made to operate on either alternating current (A.C.) at any frequency between 25 and 70 cycles or direct current (D.C.) at any voltage between 100 and 135.

PREPARING THE SET FOR OPERATION

To put the set into operation, stretch out the antenna wire to its full length.

This Stewart-Warner Radio Receiver is equipped with the latest exclusive "Aerial Reel." This reel is clipped to the bottom of the cabinet, out of the way when the set is to be moved, yet instantly ready for use. To put the aerial into use, merely pull the reel outward, which releases it from its retaining clip, and unwind the aerial by rolling it out on the floor, or letting it hang out of a convenient window. The reel is tied to the aerial wire so it cannot be lost, and is always ready to be wound up again and clipped back into place.

Occasionally good results will be obtained if the aerial wire is connected to a radiator or water pipe. Greater volume and more distant stations, however, will be obtained if the set is connected to an outside aerial.

This is particularly true if the receiver is to be used in a modern steel building. If the aerial is too long, however, it may be difficult to separate powerful local stations. The remedy is to shorten the aerial.

It is very important that the self-contained antenna wire is stretched out as far from the set as possible. If a coil of it is left next to the set, it may result in lessened volume accompanied by squealing or howling.

TUNING INSTRUCTIONS

Plug the line cord into any convenient 110 volt electric outlet and turn the volume control knob of the set three-fourths of the way to the right. This turns on the set and sets the volume control near maximum. After waiting a few seconds until the tubes warm up, you should hear a slight crackling sound coming from the set. **If the house lighting supply is D.C., you may not hear this crackling sound until you reverse the plug in its outlet.**

Turn the tuning knob very slowly throughout its entire range to pick up stations. If a station signal is accompanied by whistling or distortion, turn back the volume control until reception clears up.

When tuning the set for a weak station with the volume control well advanced, you will notice that the signal may start coming in as a high-pitched whistle which drops in pitch and then rises again as you continue tuning. To bring in such stations correctly, adjust the tuning control exactly midway between the two whistles and very slowly turn back the volume control until the station comes in clearly. Now go back and re-adjust both tuning and volume controls carefully once or twice until you get loudest reception without distortion. **This repeated adjustment is absolutely necessary for very weak stations.**

To shut off the set, turn the volume control all the way to the left (counter-clockwise) until you hear the switch snap "off."

(OVER)

GENERAL INSTRUCTIONS

If the volume control is advanced too far the set may oscillate (whistle on stations) or overload, which is indicated by distortion and poor volume. Turning back the volume control will clear up reception in such cases.

If the antenna is run too close to the set or not completely uncoiled near the set, it may oscillate (whistle on stations). In that event, stretch out the aerial wire so that it is not coiled up near to or about the set.

The Model 108 Radio Receiver Chassis uses the Stewart-Warner patented "Heat Take-Off Cord" which greatly reduces the heat inside the receiver ensuring long service-free operation.

This Heat Take-Off Cord dissipates the heat outside the receiver and consequently the cord becomes warm in use when the set is being used.

Do not reduce the length of or cut into the 110 volt cord of the set or you may burn out the tubes. If it is necessary to increase the length of the cord to reach a convenient socket, it is best to use a separate extension cord fitted with a plug and socket, since it is very difficult to make a good permanent connection to the extra resistance wire contained in the 110 volt cord.

FRONT OF CHASSIS

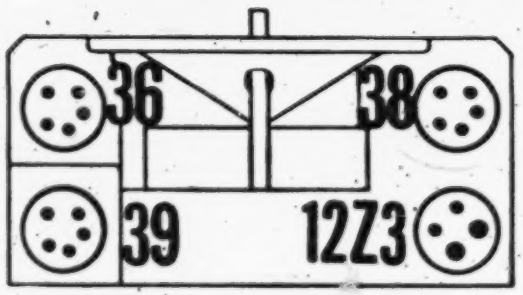

TUBE LOCATIONS

TUBES

The Model 108 uses four tubes of the following types: one type 36, one type 38, one type 39, and one type 12Z3 or 14Z3. The correct placement of these tubes in their sockets is shown in the diagram on this sheet.

When inserting the 12Z3 rectifier tube in its socket do not use too much force. If the tube does not slip in easily, you are probably trying to insert it incorrectly. Rotate the tube until the four prongs plug into the socket without being forced.

WARRANTY

This is to certify that we, the STEWART-WARNER CORPORATION, Chicago, Illinois, warrant the Stewart-Warner Model R-108 Radio Receiver manufactured by us, to be free from defects in material and workmanship under normal use and service, our obligation under this warranty being limited to repairing or replacing, through an accredited Stewart-Warner distributor, any part or parts of said product that in our judgment show evidence of such defect provided that said product shall be returned to the distributor, transportation prepaid, within 90 days from the date of delivery thereof by the dealer to the purchaser.

This warranty is expressly in lieu of all other warranties, expressed or implied, and of all other obligations on our part, and no representative or other person is authorized or permitted to make any warranty or assume for this corporation any liability not strictly in accordance with the foregoing.

This warranty shall not apply to any product which has been tampered with or altered in any way, or which has been subjected to misuse, negligence or accident, or which has the serial number altered, effaced or removed.

We make no warranty whatsoever in respect to accessories or parts not manufactured by us, as they are usually warranted by their respective manufacturers.

IN WITNESS WHEREOF, this warranty is endorsed by the

Form 5649 Printed in U.S.A. **Stewart-Warner Corporation, Chicago.**

STEWART-WARNER

CHASSIS MODEL 108X

INSTRUCTIONS

The Stewart-Warner Model 108X Compact Radio Receiver is made to operate on either alternating current (A.C.) at any frequency between 25 and 70 cycles, direct current (D.C.) at any voltage between 100 and 135, and automobile, motor-boat, Pullman, and farm-lighting batteries of 6, 12 or 32 volts. For battery operation, a special socket is provided at the back of the set, into which is plugged a special battery cable. This special battery cable can be purchased from your dealer.

When purchasing one of these battery cables, be sure to specify whether it is to be used on six, twelve, or thirty-two volts. Different cables must be used for each different value of battery voltage—the cables are not interchangeable.

Full directions for the connection of these cables both to the main battery supply and to the 135 volt B battery that is also required are given with each cable.

PREPARING THE SET FOR OPERATION

To put the set into operation, stretch out the antenna wire to its full length.

This Stewart-Warner Radio Receiver is equipped with the latest exclusive "Aerial Reel." This reel is clipped to the bottom of the cabinet, out of the way when the set is to be moved, yet instantly ready for use. To put the aerial into use, merely pull the reel outward, which releases it from its retaining clip, and unwind the aerial by rolling it out on the floor, or letting it hang out of a convenient window. The reel is tied to the aerial wire so it cannot be lost, and is always ready to be wound up again and clipped back into place.

Occasionally good results will be obtained if the aerial wire is connected to a radiator or water pipe. Greater volume and more distant stations, however, will be obtained if the set is connected to an outside aerial.

This is particularly true if the receiver is to be used in a modern steel building. If the aerial is too long, however, it may be difficult to separate powerful local stations. The remedy is to shorten the aerial.

It is very important that the self-contained antenna wire is stretched out as far from the set as possible. If a coil of it is left next to the set, it may result in lessened volume accompanied by squealing or howling.

TUNING INSTRUCTIONS

For operation on 100 to 135 volts, no special battery cable is required; just plug the line cord, which is an integral part of each set, into a convenient outlet. For battery operation, use the special cable intended for that voltage. After connecting the line cord or special cable, turn the volume control knob of the set three-fourths of the way to the right. This turns on the set and sets the volume control near maximum. After waiting a few seconds until the tubes warm up, you should hear a slight crackling sound coming from the set. **If the set is connected to a D.C. house lighting supply, you may not hear this crackling sound until you reverse the plug in its outlet.**

Turn the tuning knob very slowly throughout its entire range to pick up stations. If a station signal is accompanied by whistling or distortion, turn back the volume control until reception clears up.

When tuning the set for a weak station with the volume control well advanced, you will notice that the signal may start coming in as a high pitched whistle which drops in pitch and then rises again as you continue tuning. To bring in such stations correctly, adjust the tuning control exactly midway between the two whistles and very slowly turn back the volume control until the station comes in clearly. Now go back and re-adjust both tuning and volume controls carefully once or twice until you get loudest reception without distortion. This repeated adjustment is absolutely necessary for very weak stations.

To shut off the set, turn the volume control all the way to the left (counter-clockwise) until you hear the switch snap "off."

GENERAL INSTRUCTIONS

If the volume control is advanced too far the set may oscillate (whistle on stations) or overload, which is indicated by distortion and poor volume. Turning back the volume control will clear up reception in such cases.

If the antenna is run too close to the set or not completely uncoiled near the set, it may oscillate (whistle on stations). In that event, stretch out the aerial wire so that it is not coiled up near to or about the set.

The Model 108X Radio Receiver Chassis uses the Stewart-Warner patented "Heat Take-Off Cord" which greatly reduces the heat inside the receiver ensuring long service-free operation.

This Heat Take-Off Cord dissipates the heat outside the receiver and consequently the cord becomes warm in use when the set is being used.

Do not reduce the length of or cut into the 110 volt cord of the set or you may burn out the tubes. If it is necessary to increase the length of the cord to reach a convenient socket, it is best to use a separate extension cord fitted with a plug and socket, since it is very difficult to make a good permanent connection to the extra resistance wire contained in the 110 volt cord.

FRONT OF CHASSIS

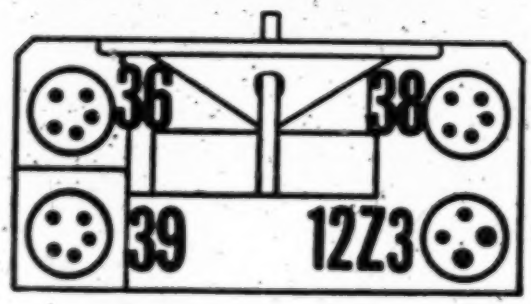

TUBE LOCATIONS

TUBES

The Model 108X uses four tubes of the following types: one type 36, one type 38, one type 39, and one type 12Z3 or 14Z3. The correct placement of these tubes in their sockets is shown in the diagram on this sheet.

When inserting the 12Z3 rectifier tube in its socket do not use too much force. If the tube does not slip in easily, you are probably trying to insert it incorrectly. Rotate the tube until the four prongs plug into the socket without being forced.

WARRANTY

This is to certify that we, the STEWART-WARNER CORPORATION, Chicago, Illinois, warrant the Stewart-Warner Model R108X Radio Receiver manufactured by us, to be free from defects in material and workmanship under normal use and service, our obligation under this warranty being limited to repairing or replacing, through an accredited Stewart-Warner distributor, any part or parts of said product that in our judgment show evidence of such defect provided that said product shall be returned to the distributor, transportation prepaid, within 90 days from the date of delivery thereof by the dealer to the purchaser.

This warranty is expressly in lieu of all other warranties, expressed or implied, and of all other obligations on our part, and no representative or other person is authorized or permitted to make any warranty or assume for this corporation any liability not strictly in accordance with the foregoing.

This warranty shall not apply to any product which has been tampered with or altered in any way, or which has been subjected to misuse, negligence or accident, or which has the serial number altered, effaced or removed.

We make no warranty whatsoever in respect to accessories or parts not manufactured by us, as they are usually warranted by their respective manufacturers.

IN WITNESS WHEREOF, this warranty is endorsed by the

Stewart-Warner Corporation, Chicago.

Form 359 Printed in U.S.A.

CHASSIS MODEL 109 (RECEIVER MODELS 1090 TO 1099)

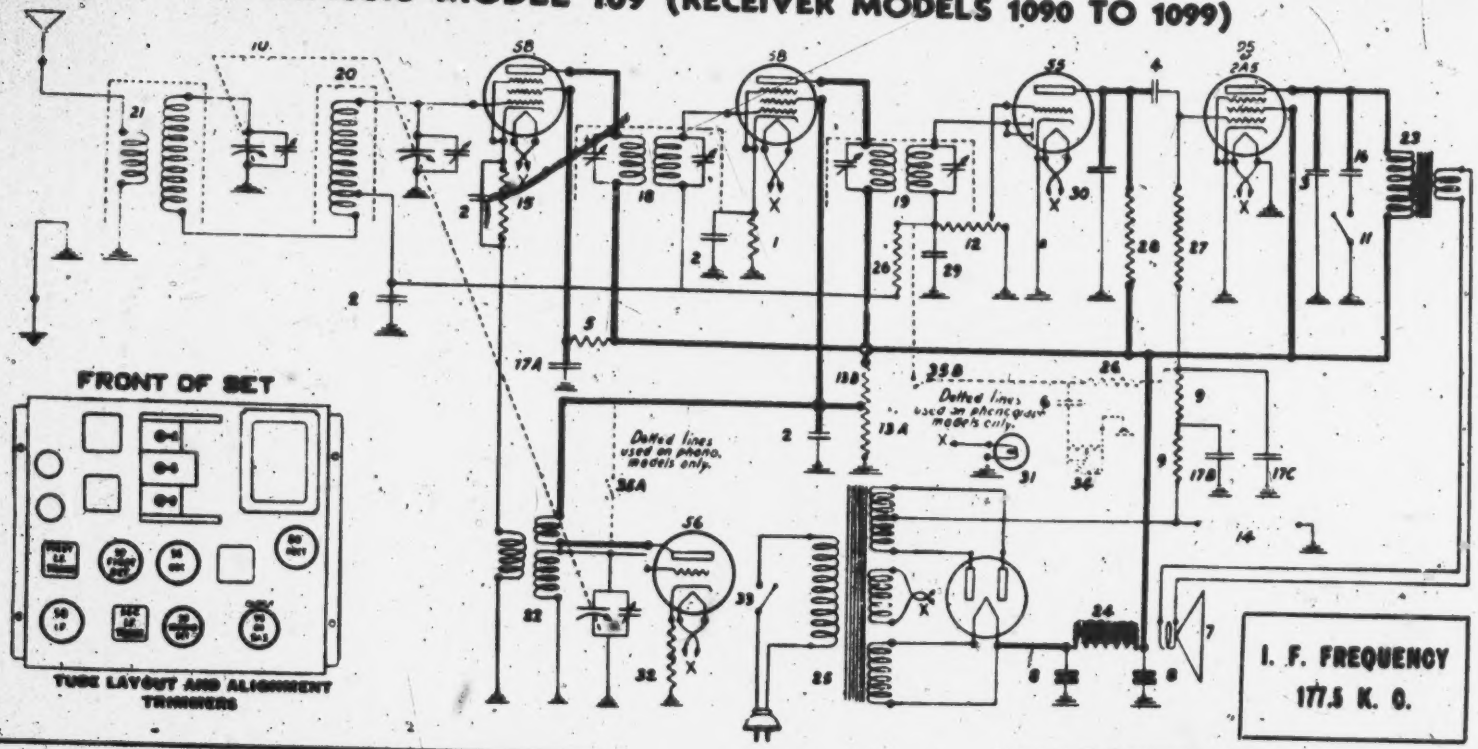

VOLTAGE TABLE

LINE VOLTAGE 115 — VOLUME CONTROL FULL ON

Type of Tube	Tube Circuit	Filament Voltage	Plate Voltage	Screen Grid Voltage	Bias Voltage
56	Osc.	2.40	88		9.6
58	1st Det.	2.40	208	92	5
58	I. F.	2.40	208	92	3.4
55	2nd Det.	2.42	18		
25 or 2A5	Output	2.38	208	208	16.5*
80	Rect.	5.00			

All D. C. voltages measured with respect to ground, using high resistance voltmeter of 1000 ohms per volt. Readings will vary, depending upon voltage range of meter, being higher for higher range instruments. This variation is most marked for second detector plate voltages.

*This reading taken across metal clad bias resistor.

Form 3686—Printed in U. S. A.

109 PARTS LIST

Illus. No.	Part No.	Description	List Price
1	67237	500 ohm [illegible] watt resistor	00.25
2	67294	.1 mfd., 200 volt condenser	.30
3	67290	.01 mfd., 600 volt condenser	.30
4	67299	.02 mfd., 600 volt condenser	.30
5	67936	100,000 ohm, ½ watt resistor	.25
6	81190	.1 mfd., 600 v. round. Phono model only	.35
7	81271	Speaker diaphragm assembly	2.75
8	81247	8 mfd., 165 volt electrolytic round.	1.75
9	81301	150,000 ohm, ½ watt resistor	.25
10	81700	Variable condenser	2.60
11	81721	Tone control switch	.65
12	81722	500,000 ohm, vol. control & S. C. switch	1.25
13	81870	Vol. control & phonograph switch unit	2.10
13A	81724	10,000 ohm, resistor } Wound in	.60
13B		7,500 ohm, resistor } one unit	
14	81725	313 ohm, wire wound resistor	.30
15	81727	1000 ohm, ½ watt resistor	.30
16	81730	.04 mfd., 600 volt condenser with bracket	.35
17A	81786	.5 mfd., 200 volt }	1.30
17B		.25 mfd., 100 volt } in one roll	
17C		.25 mfd., 100 volt }	
18	81787	First I. F. Transformer	2.00
19	81788	Second I. F. Transformer	2.00
20	81764	First detector tuning coil	1.00
21	81768	Antenna coil	1.25
22	81770	Oscillator coil	1.25
23	81774	Output transformer	2.00
24	81779	Speaker field coil	2.00
25	81880	110 volt 60 cy., power transformer	6.25
	81881	220 volt 60 cy., power transformer	6.25
26	81882	400,000 ohm, ½ watt resistor	.30
27	81883	100,000 ohm, ½ watt resistor	.30
28	81810	110,000 ohm 1 watt resistor	.30
29	81811	.00025 mfd., condenser	.30
30	81812	.00031 mfd., condenser	.30
31	81822	2.3 volt pilot light	.25
32	81826	1500 ohm, ½ watt resistor	.25
33	81830	230 volt 60 cy., power transf. (see 81880)	2.75
34, 35	81869	Line Switch. (Separate unit used in phonograph chassis only. Part of volume control on standard chassis)	.40
	81870	Phono chassis type volume control (See 81722)	2.00
36		Phonograph pickup.	
37		Phonograph switch, mounted on back volume control in phonograph models.	

MISCELLANEOUS PARTS NOT SHOWN IN DIAGRAM

67236	Rubber tuning drive bushing	
81839	4-prong socket	
81840	5-prong socket	
81841	6-prong socket	
81842	R. F. coil shield	
81843	Tube shield	
81733	Ground clip	
81838	Tuning dial and gear assembly (see 81879)	
81817	First I. F. coil shield	
81818	Second I. F. coil shield	
81879	Celluloid tuning dial	
38189	Steel washer	
39903	Lock washer	
67711	Rubber washer } Used for rubber	
67712	Rubber bushing } mounting variable condenser.	
67713	Steel bushing	

PLAINTIFFS' EXHIBIT NO. 93, Sheet 30.
(Chassis Model 109 (Receiver Models 1090 to 1099)

728
456
457

PLAINTIFFS' EXHIBIT NO. 93, Sheet 40.

SERVICE DATA FOR MODEL 109 CHASSIS

CIRCUIT DESCRIPTION OF 109 CHASSIS

The Model 109 Stewart-Warner Radio Chassis makes use of a six-tube superheterodyne circuit embodying automatic volume control (A.V.C.) through the action of its type 55 detector tube. An incoming signal is tuned first by a pre-selector circuit to increase selectivity and reduce image frequency interference and then fed into a tuned first detector stage, where it beats with the output of a local oscillator to produce a 177.5 K.C. intermediate frequency signal. This odd frequency is chosen to reduce further any image frequency interference.

The I.F. signal is amplified in an exceptionally high gain stage, and then fed to the diode section of the 55 tube where it is rectified. This rectified signal appears across the 500,000 ohm potentiometer (No. 12 in the diagram) not only at radio frequencies but also as an audio voltage. Any desired portion of this audio voltage is picked up by the sliding arm of the potentiometer and fed to the triode section of the 55 tube, which functions purely as a standard A.F. amplifier. Thus this potentiometer is made to act as the volume control.

The necessary A.V.C. operating potential is developed by virtue of the radio frequency drop across the potentiometer resistance. This potential is smoothed out by an appropriate resistance-capacity filter and applied as a bias to the grids of the first detector and I.F. tubes. Thus as the incoming signal increases or decreases in strength the bias is raised or lowered proportionately and the audio output of the set maintained constant.

Excellent tone quality is realized in this set because of the superior design of the resistance network coupling the triode section of the 55 to the output pentode.

ALIGNING THE 109 CHASSIS

Alignment can be carried out intelligently only if the service man knows the general layout of the set, and how each circuit is affected during the process of alignment. The simplified top view of the chassis appearing on the other side of this sheet gives the layout of the receiver and indicates the names and locations of the various aligning adjustments. The following brief discussion of what actually happens during alignment should be carefully read, using the sketch as a basis before commencing the actual work.

LOCATION AND FUNCTION OF ALIGNING ADJUSTMENTS

The incoming signal is tuned first by the pre-selector "A" stage and then fed into the first detector "B" circuit, where it is tuned again to improve selectivity. These circuits are brought into exact alignment by the two trimmer condensers "A" and "B," pointed out in the attached sketch. The tuned oscillator circuit is so designed that it tunes to a frequency exactly 177.5 K.C. higher than the incoming signal. This circuit is kept in exact step with the other two by means of the oscillator condenser trimmer "O."

The two intermediate frequency (I.F.) transformers are of the tuned input-tuned output type and each winding is tuned by a separate trimmer condenser, making a total of four additional adjustments. The first I.F. transformer is in the steel shield at the right side of the set, while the second I.F. transformer is at the rear of the chassis. The I.F. trimmer adjusting screws can easily be reached through two small holes at the base of each shield, the primary circuit adjustment in each case being at the left and the secondary adjustment at the right.

PRELIMINARY STEPS IN ALIGNING

In aligning the Model 109 it is essential to use a high grade oscillator and sensitive output meter. The I.F. signal fed into the receiver must be very weak or it will cause the A.V.C. circuit to function, making correct alignment impossible. The output meter must be sufficiently sensitive to give a satisfactory reading with this low signal.

Before starting the alignment procedure see that the volume control is full on, and the output meter connected either between the pentode plate and ground through a .25 mfd condenser or across the voice coil, depending upon its sensitivity.

ALIGNING PROCEDURE

With this preliminary discussion clearly in mind, the actual alignment can be started. The following step-by-step routine should be followed for satisfactory results.

1. Set up the oscillator, and tune it to exactly 177.5 K.C. (This frequency can be accurately determined by tuning in a station at either 710 or 1420 K.C. and beating the 4th or 8th harmonic of the oscillator 177.5 K.C. signal against it. To be sure that you have the harmonic of the 177.5 K.C. signal, instead of some other frequency, tune in the other 177.5 harmonics on the broadcast dial. These should come in 177.5 K.C. on either side of the original setting. Do not use the oscillator calibration curve to determine this intermediate frequency.)

2. Connect the oscillator output between the grid cap of first detector tube and chassis.

Adjusting R. F. and Oscillator Circuits

1. Twist the aerial and ground wires of the set together to reduce noise pick-up. Connect the aerial wire to the output of the oscillator and ground both set and oscillator. Adjust the oscillator frequency to 1400 K.C. and carefully tune the receiver to give maximum output. Adjust the oscillator output to produce about one-half full scale deflection of the output meter.

2. Carefully tune the "A" trimmer till the output meter reading reaches a maximum.

Due to the fact that the variable condenser is mounted on rubber cushion supports, pressure of the aligning tool will usually cause it to shift slightly and throw it out of tune. It is therefore necessary to retune the set repeatedly while adjusting any variable condenser trimmer.

3. Retune the set and adjust the "B" trimmer for maximum output.

The third, or "O" trimmer should not be touched unless the set is badly out of calibration at the high frequency end of the dial.

If the set is out of calibration, it can be re-calibrated as follows: Set the tuning dial at the frequency reading of some station between 1200 and 1500 kilocycles only, whose exact frequency is known and which can be picked up without any difficulty. Adjust the oscillator trimmer "O" until this station is brought in with maximum volume. Re-adjust the "A" and "B" trimmers again, since these are always affected by any change in the oscillator tuned circuit.

The receiver should now be perfectly aligned.

REVISIONS

	MAR	DATE	
8			
7			
6			
5			
4			
3			
2			
1			

THIS PRINT SUPERSEDES ANY PRINT DATED PRIOR TO DEC 12 1933

IN-427

PLAINTIFFS' EXHIBIT No. 93, Sheet 41.
(Blueprint I.N. 427)

42 3 GANG VARIABLE CONDENSER

58 56 58 55 PAS 93

1) B-727 100[illegible] 1/2W FIXED RESIS.
2) B-849 150[illegible] 1W FIXED RESIS.
3)
4) 81805 300,000[illegible] 1/2W FIXED RESIS.
5) } 81724 { 10,000[illegible] 2.5W FIXED RESIS.
6) } { 7500[illegible] 1.5W FIXED RESIS.
7) 81722 500,000[illegible] VOLUME CONTROL
8) 81810 110,000[illegible] W. FIXED RESIS.
9) 67938 00,000[illegible] 1W. FIXED RESIS.
10) 81809 150,000[illegible] 1/2W FIXED RESIS.
11) 81738 150,000[illegible] 1/2W. FIXED RESIS.
12) 81381 150,000[illegible] 1/2 W. FIXED RESIS.
13) 81725 3[illegible] W W FIXED RESIS.
14) 67257 50[illegible] 1/2W. FIXED RESIS.

25V LAMP BULB

30) G-67294 .1 MFD. 200V. FIXED COND.
31) G-67294 .1 MFD. 200V. FIXED COND.
32) G-67294 .1 MFD. 200V. FIXED COND.
33) G-67294 .1 MFD. 200V. FIXED COND.
34) G-67299 .02 MFD. 400V. FIXED COND.
35) G-67298 .01 MFD. 600V. FIXED COND.
36) G 81739 .04 MFD. 600V. FIXED COND.
37)
38) G 81756 { .5 MFD. 200V. / 25 MFD. 100V. / 25 MFD. 100V. } ONE CAN.
39)
40) 81347 8 MFD. 450V. ELECTROLYTIC COND.
41) 81347 8 MFD. 450V. ELECTROLYTIC COND.
42) 81700 VARIABLE TUNING COND.
43) 81811 .00026 MFD. FIXED COND.
44) 81812 .00031 MFD. FIXED COND.

80

WHITE GREEN RED YELLOW

ELECTRO DYNAMIC SPEAKER

40) 81768 "A" COIL (PRE SELECTOR)
41) 81764 "B" COIL (1ST DETECTOR)
42) 81770 "O" COIL (OSCILLATOR)
43) 81797 1ST I.F. TRANS. ASSEM.
44) 81788 2ND I.F. TRANS. ASSEM.
45) 81774 OUT PUT TRANS.
46) 81808 POWER TRANS.

47) 81731 TONE CONTROL
48) POWER SUPPLY (SEE BOTH ITEM #7

BLK. YEL. GRN. BLK. RED

115 V. 125 V. 230 V. 230 V. 230 V.

PRI. #1 PRI. #2

CAUTION

(Blueprint I.N. 427)

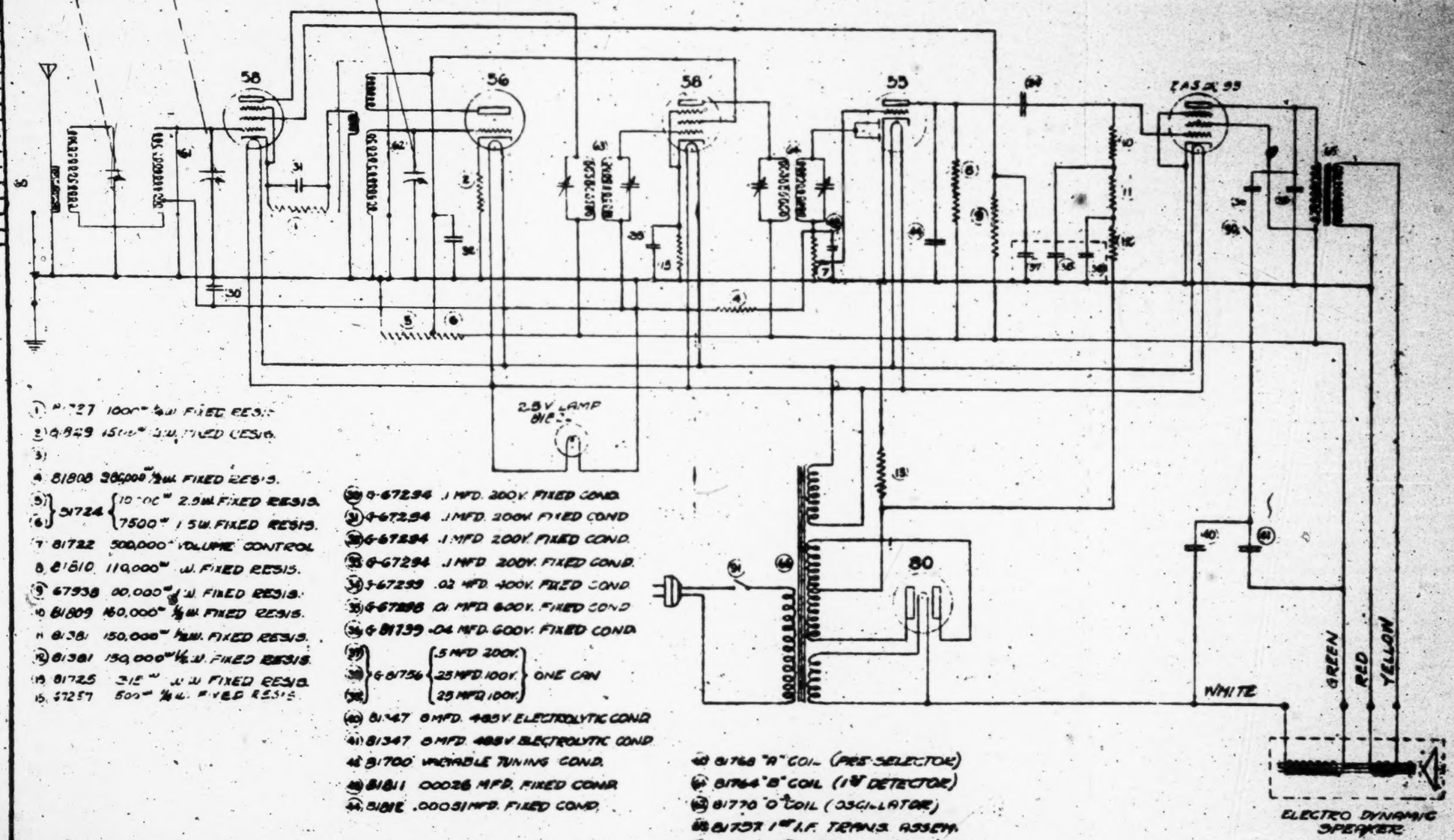

1. 81727 1000 ¼W FIXED RESIS.
2. 81829 1500 ¼W FIXED RESIS.
3.
4. 81808 300,000 ½W FIXED RESIS.
5. 81724 10,000 2.5W FIXED RESIS.
6. 81724 7500 1.5W FIXED RESIS.
7. 81722 500,000 VOLUME CONTROL
8. 81810 110,000 W. FIXED RESIS.
9. 67938 00,000 ¼W FIXED RESIS.
10. 81809 160,000 ½W FIXED RESIS.
11. 81381 150,000 ½W FIXED RESIS.
12. 81381 150,000 ½W FIXED RESIS.
13. 81725 315 W W FIXED RESIS.
15. 67257 500 ¼W FIXED RESIS.

30. G-67294 .1 MFD. 200V. FIXED COND.
31. G-67294 .1 MFD. 200V. FIXED COND.
32. G-67294 .1 MFD. 200V. FIXED COND.
33. G-67294 .1 MFD. 200V. FIXED COND.
34. G-67299 .02 MFD. 400V. FIXED COND.
35. G-67298 .01 MFD. 600V. FIXED COND.
36. G-81739 .04 MFD. 600V. FIXED COND.
37. G-81756 .5 MFD. 200V. ONE CAN
38. G-81756 25 MFD. 100V. ONE CAN
39. G-81756 25 MFD. 100V. ONE CAN
40. 81347 8 MFD. 485V. ELECTROLYTIC COND.
41. 81347 8 MFD. 485V. ELECTROLYTIC COND.
42. 81700 VARIABLE TUNING COND.
43. 81811 .00026 MFD. FIXED COND.
44. 81812 .00051 MFD. FIXED COND.

40. 81768 "A" COIL (PRE-SELECTOR)
41. 81764 "B" COIL (1st DETECTOR)
42. 81770 "O" COIL (OSCILLATOR)
43. 81757 1st I.F. TRANS. ASSEM.
44. 81758 2nd I.F. TRANS. ASSEM.
45. 81774 OUT PUT TRANS.
46. 81800 POWER TRANS.

30. 81721 TONE CONTROL
31. POWER SUPPLY HUB WITH ITEM #7

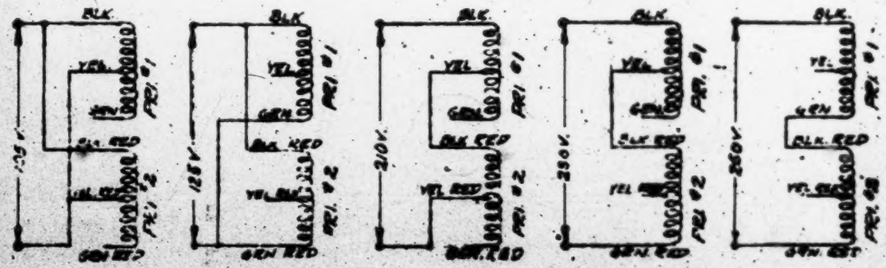

POWER TRANS. PRIMARY CONNECTIONS FOR R-109-E MODELS

CIRCUIT DIAGRAM R-109-A-E

JAN. -1933

IN-427

PLAINTIFFS' EXHIBIT NO. 93, Sheet 42 462- 463

STEWART-WARNER
CHASSIS MODEL 109
INSTRUCTIONS

ANTENNA SYSTEM

Satisfactory radio reception is more dependent upon a proper antenna-ground installation than upon any other factor outside of the set itself. It is the function of the antenna system to collect the minute energy radiated by the broadcast station and carry it to the set. Therefore if you wish to insure yourself consistent and enjoyable reception it is quite important to install a suitable antenna system to pick up and carry the radio signal to your set.

The most satisfactory aerial for any particular location will vary widely depending upon local structural details and sources of interference. As a general rule, a good outside aerial f m fifty to seventy-five feet long including lead-in will give best results.

The aerial proper should consist of a length of copper wire insulated at each end with a glazed porcelain or glass insulator. It should be erected as far as possible from buildings, trees, and other obstructions. Do not run it alongside of electric wires, a tin roof, or any metallic structure. Avoid placing the aerial above or below exposed wires installed by the electric light or telephone company.

Where it is not possible to erect an outside aerial, an inside one consisting of sixty feet of insulated wire led around the picture molding of the room makes a fair substitute.

LEAD-IN

The lead-in from the outside aerial should consist of a heavily insulated copper wire. In certain locations where noisy reception is experienced due to interference from electrical machinery in the vicinity of the set, shielded lead-in wire may prove helpful in reducing interference. In extreme cases, special types of aerials and lead-ins designed to balance out interference may be erected. See your local dealer for further information on this point.

INSTALLATION OF GROUND

The ground connection is just as important as the aerial.

In a great number of installations a satisfactory ground can be made by connecting to a cold water pipe. This connection should be made by soldering the wire directly to the pipe or by some approved form of ground clamp. The pipe should be thoroughly cleaned and all paint and corrosion removed at the point at which the connection is made. Radiators may also be used for grounds, but do not always give good results.

Very frequently, when the wiring of a home conforms to underwriters' specifications so that all conduit piping is grounded a wire fastened to the metal plate of a base-board outlet makes a satisfactory ground.

HOW TO CONNECT THE SET

Before connecting up the set, be sure that your home is wired for the voltage and current for which the set is designed as indicated on the name plate on the rear of the chassis. If you are in doubt, call up your local power company for the necessary information. Connecting the set to a supply outlet furnishing the wrong type of current will result in improper operation or damage.

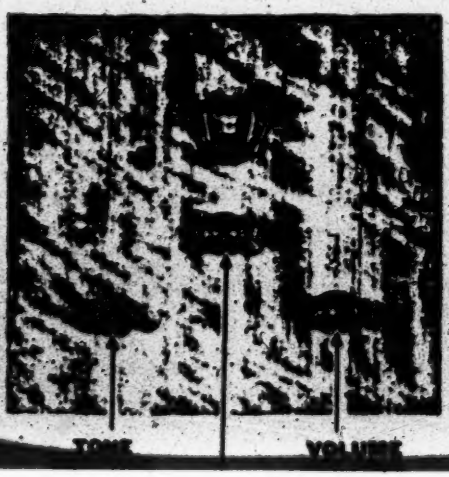

Your radio receiver is designed to operate at 115 volts. If the voltage in your home rises above 120 volts, you should purchase a suitable voltage regulator to reduce the line voltage to the proper value so that your radio tubes will give you satisfactory service.

Installation of the set can best be accomplished in the following manner:

1. Remove the packing material holding the tubes in position. Note that some of the tubes have metal caps over which are fitted small clips. Be sure the metal clips are fitted over the caps

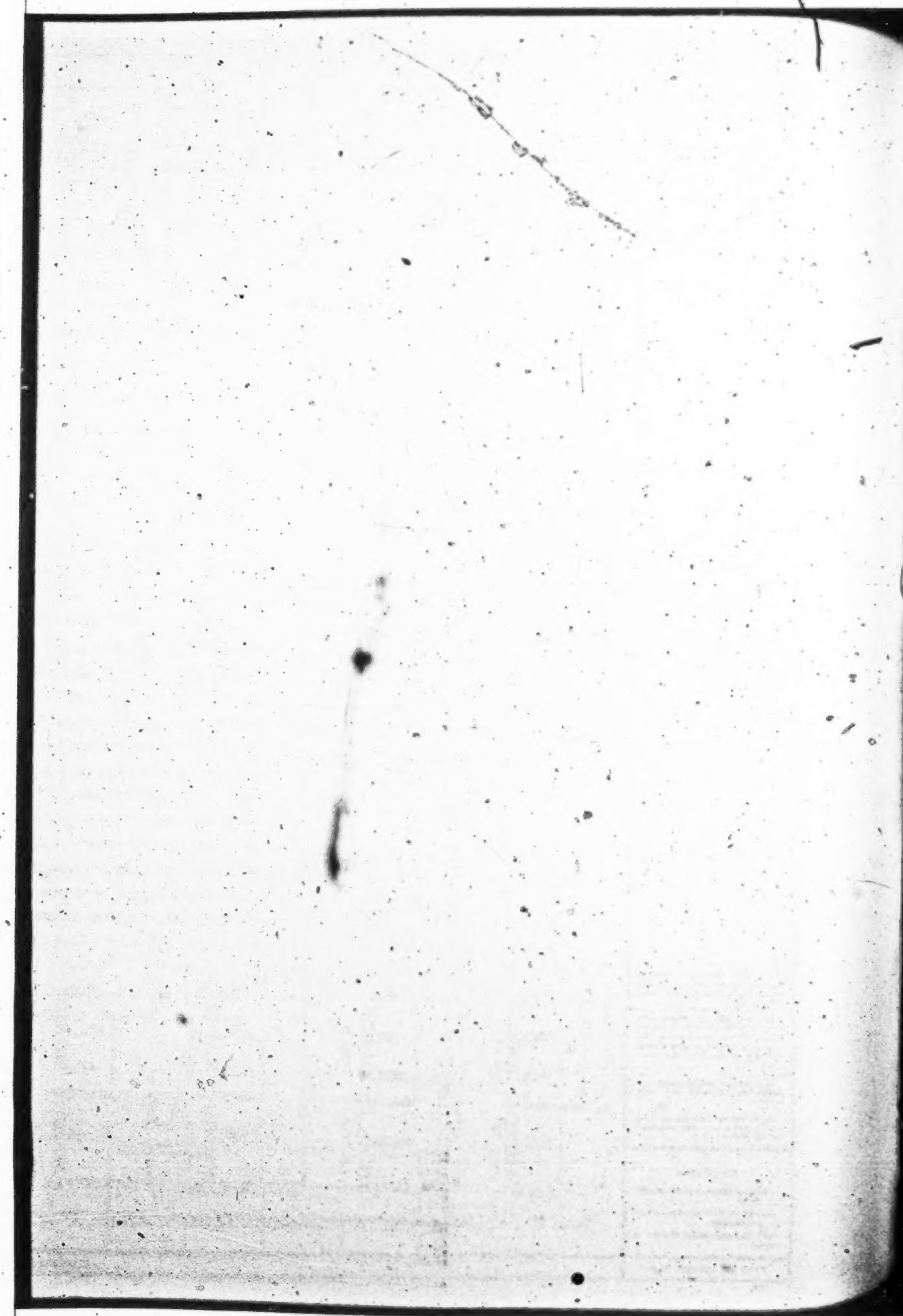

STEWART-WARNER
CHASSIS MODEL 109
INSTRUCTIONS

ANTENNA SYSTEM

Satisfactory radio reception is more dependent upon a proper antenna-ground installation than upon any other factor outside of the set itself. It is the function of the antenna system to collect the minute energy radiated by the broadcast station and carry it to the set. Therefore if you wish to insure yourself consistent and enjoyable reception it is quite important to install a suitable antenna system to pick up and carry the radio signal to your set.

The most satisfactory aerial for any particular location will vary widely depending upon local structural details and sources of interference. As a general rule, a good outside aerial f m fifty to seventy-five feet long including lead-in will give best results.

The aerial proper should consist of a length of copper wire insulated at each end with a glazed porcelain or glass insulator. It should be erected as far as possible from buildings, trees, and other obstructions. Do not run it alongside of electric wires, a tin roof, or any metallic structure. Avoid placing the aerial above or below exposed wires installed by the electric light or telephone company.

Where it is not possible to erect an outside aerial, an inside one consisting of sixty feet of insulated wire led around the picture molding of the room makes a fair substitute.

LEAD-IN

The lead-in from the outside aerial should consist of a heavily insulated copper wire. In certain locations where noisy reception is experienced due to interference from electrical machinery in the vicinity of the set, shielded lead-in wire may prove helpful in reducing interference. In extreme cases, special types of aerials and lead-ins designed to balance out interference may be erected. See your local dealer for further information on this point.

INSTALLATION OF GROUND

The ground connection is just as important as the aerial.

In a great number of installations a satisfactory ground can be made by connecting to a cold water pipe. This connection should be made by soldering the wire directly to the pipe or by some approved form of ground clamp. The pipe should be thoroughly cleaned and all paint and corrosion removed at the point at which the connection is made. Radiators may also be used for grounds, but do not always give good results.

Very frequently, when the wiring of a home conforms to underwriters' specifications so that all conduit piping is grounded a wire fastened to the metal plate of a base-board outlet makes a satisfactory ground.

HOW TO CONNECT THE SET

Before connecting up the set, be sure that your home is wired for the voltage and current for which the set is designed as indicated on the name plate on the rear of the chassis. If you are in doubt, call up your local power company for the necessary information. Connecting the set to a supply outlet furnishing the wrong type of current will result in improper operation or damage.

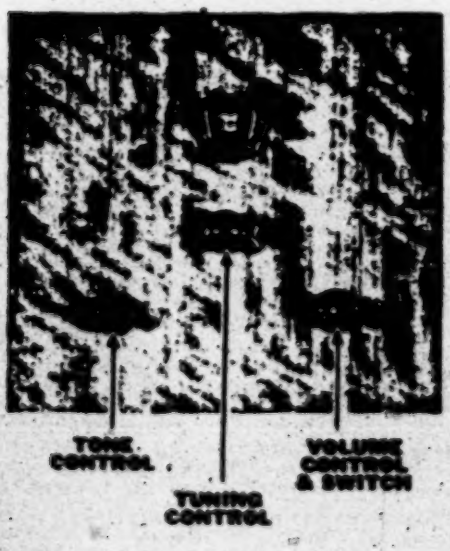

Your radio receiver is designed to operate at 115 volts. If the voltage in your home rises above 120 volts, you should purchase a suitable voltage regulator to reduce the line voltage to the proper value so that your radio tubes will give you satisfactory service.

Installation of the set can best be accomplished in the following manner:

1. Remove the packing material holding the tubes in position. Note that some of the tubes have metal caps over which are fitted small clips. Be sure the metal clips are fitted over the caps, and do not touch the tube shields.

2. Connect the aerial to the blue wire extending from the back of the chassis. The ground should be connected to the clip on the back of the chassis.

3. Plug the extension cord of the set into the most convenient socket.

PLAINTIFFS' EXHIBIT NO. 93, Sheet 43 464 - 465

TUNING INSTRUCTIONS

—Refer to the illustration before attempting to tune the set for the first time.

1. Turn on the set by turning the right hand, or volume control knob all the way to the right (clockwise).

2. Wait a few seconds for the tubes to warm up. There should be a slight rushing or crackling sound coming from the speaker to indicate the set is ready to be operated.

3. Now turn the center tuning control slowly to bring in stations. You will notice that as you tune either into or out of a station the program will be accompanied by a certain amount of hissing and distortion. It is very important that you tune carefully to the exact center of the dial space covered by the station to obtain fullest and deepest tone.

4. After the desired station is tuned in correctly, the tone control may be adjusted to suit the individual requirements of the listener.

In addition to regulating tone, the tone control has a very important function in reducing static and those interference noises created by the operation of electrical machinery. As it happens, these crackling and frying noises are very largely composed of the higher tones, so that turning the tone control to the right minimizes this interference to a very great extent.

5. The number system on the dial of your radio receiver is conveniently calibrated to indicate broadcasting station frequencies in kilocycles. However, the final zero has been omitted from the dial numbers, so that dial number 110 corresponds to 1100 kilocycles, dial position 55 to 550 kilocycles, and so on.

FRONT OF SET

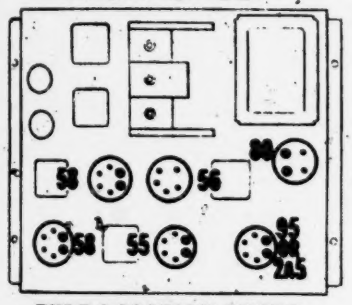

TUBE LOCATION CHART

6. It may be noticed occasionally when listening to distant stations that the background noise increases and decreases in a regular fashion, although the program itself does not fluctuate in volume. This is due entirely to fading of the incoming wave. The automatic volume control prevents any change in volume, but as the signal tends to fade out, the sensitivity of the set automatically increases, and the static that is always present becomes greater in proportion to this weaker signal so that it is heard more loudly.

TUBES USED

Six tubes are used. Their type numbers and positions in the set are shown in the tube location diagram.

IMPORTANT!

Your Stewart-Warner Radio Receiver is not guaranteed unless you have filled in and mailed the guarantee registration card accompanying each set within ten days after the purchase of the set. Be sure and ask your dealer for this card if it does not accompany the receiver.

WARRANTY

This is to certify that we, the STEWART-WARNER CORPORATION, Chicago, Illinois, warrant the Stewart-Warner Model R-109 Radio Receiver manufactured by us, to be free from defects in material and workmanship under normal use and service, our obligation under this warranty being limited to repairing or replacing, through an accredited Stewart-Warner distributor, any part or parts of said product that in our judgment show evidence of such defect provided that said product shall have been registered with us at the time of purchase; and provided further, that said product shall be returned to the distributor, transportation prepaid, within 90 days from the date of delivery thereof by the dealer to the purchaser.

This warranty is expressly in lieu of all other warranties, expressed or implied, and of all other obligations on our part, and no representative or other person is authorized or permitted to make any warranty or assume for this corporation any liability not strictly in accordance with the foregoing.

This warranty shall not apply to any product which has been tampered with or altered in any way, or which has been subjected to misuse, negligence or accident, or which has the serial number altered, effaced or removed.

—Refer to the illustration before attempting to tune the set for the first time.

1. Turn on the set by turning the right hand, or volume control knob all the way to the right (clockwise).

2. Wait a few seconds for the tubes to warm up. There should be a slight rushing or crackling sound coming from the speaker to indicate the set is ready to be operated.

3. Now turn the center tuning control slowly to bring in stations. You will notice that as you tune either into or out of a station the program will be accompanied by a certain amount of hissing and distortion. It is very important that you tune carefully to the exact center of the dial space covered by the station to obtain fullest and deepest tone.

4. After the desired station is tuned in correctly, the tone control may be adjusted to suit the individual requirements of the listener.

In addition to regulating tone, the tone control has a very important function in reducing static and those interference noises created by the operation of electrical machinery. As it happens, these crackling and frying noises are very largely composed of the higher tones, so that turning the tone control to the right minimizes this interference to a very great extent.

5. The number system on the dial of your radio receiver is conveniently calibrated to indicate broadcasting station frequencies in kilocycles. However, the final zero has been omitted from the dial numbers, so that dial number 110 corresponds to 1100 kilocycles, dial position 55 to 550 kilocycles, and so on.

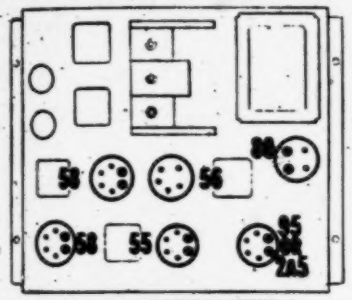

TUBE LOCATION CHART

6. It may be noticed occasionally when listening to distant stations that the background noise increases and decreases in a regular fashion, although the program itself does not fluctuate in volume. This is due entirely to fading of the incoming wave. The automatic volume control prevents any change in volume, but as the signal tends to fade out, the sensitivity of the set automatically increases, and the static that is always present becomes greater in proportion to this weaker signal so that it is heard more loudly.

TUBES USED

Six tubes are used. Their type numbers and positions in the set are shown in the tube location diagram.

IMPORTANT!

Your Stewart-Warner Radio Receiver is not guaranteed unless you have filled in and mailed the guarantee registration card accompanying each set within ten days after the purchase of the set. Be sure and ask your dealer for this card if it does not accompany the receiver.

WARRANTY

This is to certify that we, the STEWART-WARNER CORPORATION, Chicago, Illinois, warrant the Stewart-Warner Model R-109 Radio Receiver manufactured by us, to be free from defects in material and workmanship under normal use and service, our obligation under this warranty being limited to repairing or replacing, through an accredited Stewart-Warner distributor, any part or parts of said product that in our judgment show evidence of such defect provided that said product shall have been registered with us at the time of purchase; and provided further, that said product shall be returned to the distributor, transportation prepaid, within 90 days from the date of delivery thereof by the dealer to the purchaser.

This warranty is expressly in lieu of all other warranties, expressed or implied, and of all other obligations on our part, and no representative or other person is authorized or permitted to make any warranty or assume for this corporation any liability not strictly in accordance with the foregoing.

This warranty shall not apply to any product which has been tampered with or altered in any way, or which has been subjected to misuse, negligence or accident, or which has the serial number altered, effaced or removed.

We make no warranty whatsoever in respect to accessories or parts not manufactured by us, as they are usually warranted by their respective manufacturers.

IN WITNESS WHEREOF, this warranty is endorsed by the

Stewart-Warner Corporation, Chicago

Form 3667. Printed in U.S.A.

PLAINTIFFS' EXHIBIT NO. 94,
(Colored photostat of set SW 109)

CHASSIS MODEL 109 (RECEIVER MODELS 1090 TO 1099)

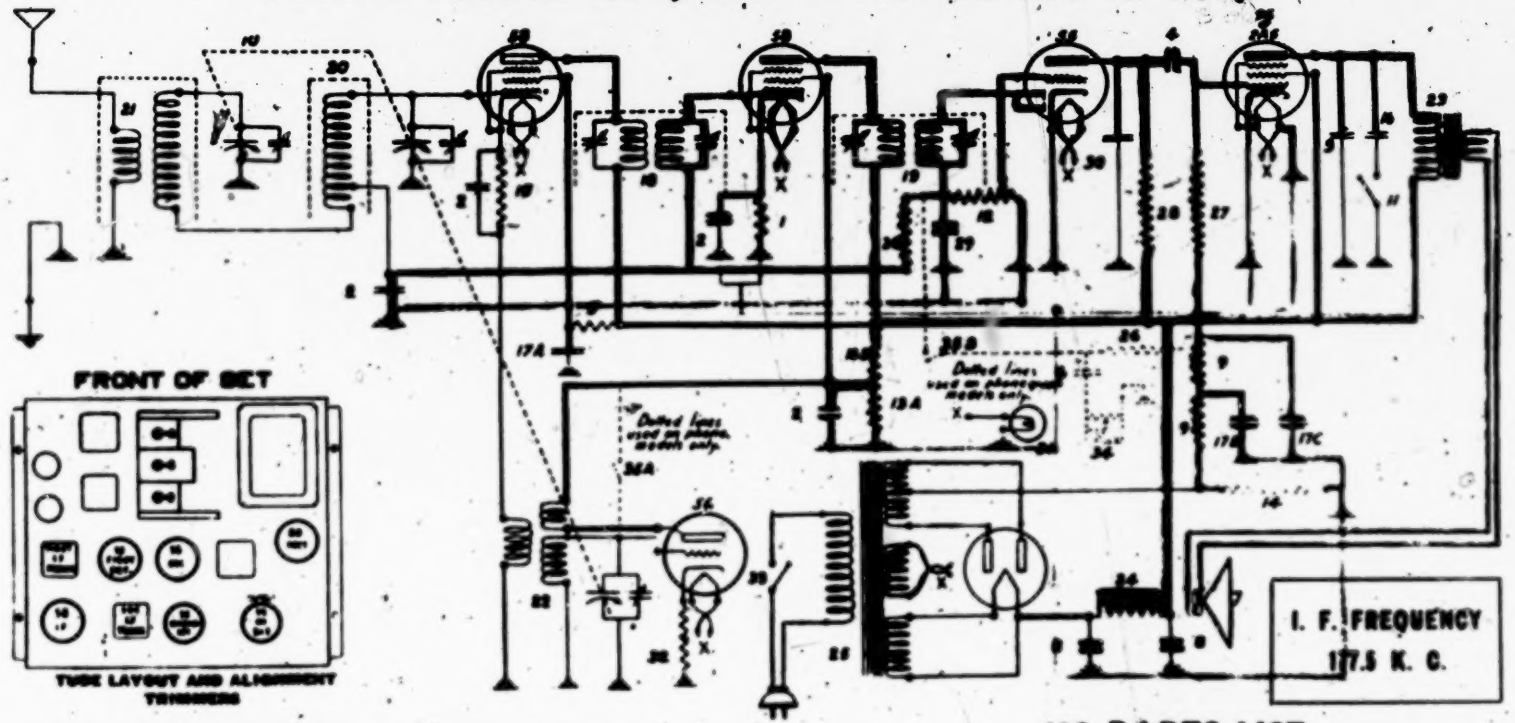

VOLTAGE TABLE

LINE VOLTAGE 115 — VOLUME CONTROL FULL ON

Type of Tube	Tube Circuit	Filament Voltage	Plate Voltage	Screen Grid Voltage	Bias Voltage
56	Osc.	2 40	88		9 6
58	1st Det.	2 40	208	92	5
58	I. F.	2 40	208	92	3 4
55	2nd Det.	2 42	18		
95 or 2A5	Output	2 38	200	208	16 5*
80	Rect.	5 00			

All D. C. voltages measured with respect to ground, using high resistance voltmeter of 1000 ohms per volt. Readings will vary, depending upon voltage range of meter, being higher for higher range instruments. This variation is most marked for second detector plate voltages.

*This reading taken across metal clad bias resistor.

Form 5020—Printed In U. S. A.

109 PARTS LIST

Diag. No.	Part No.	Description	List Price
1	67237	200 ohm, ½ watt resistor	$0.25
2	67294	.1 mfd., 200 volt condenser	.30
3	67298	.01 mfd., 600 volt condenser	.30
4	67299	.02 mfd., 600 volt condenser	.30
5	67902	100,000 ohm, ½ watt resistor	.25
6	81190	.1 mfd., 200 v. cond. Phono model only	.35
7	81274	Speaker diaphragm assembly	2.75
8	81247	8 mfd., 400 volt electrolytic cond.	1.75
9	81281	100,000 ohm, ½ watt resistor	.25
10	81700	Variable condenser	3.00
11	81721	Tone control switch	.45
12	81722	200,000 ohm, vol. control & A. C. switch	1.25
	81870	Vol. control & phonograph switch unit	2.10
13A	81724	10,000 ohm, resistor } Wound in one unit	.60
13B		7,500 ohm, resistor }	
14	81725	313 ohm, wire wound resistor	.30
15	81727	1000 ohm, ½ watt resistor	.30
16	81730	.04 mfd., 600 volt condenser with bracket	.35
17A	81726	.5 mfd., 200 volt } in one cell	1.30
17B		.25 mfd., 100 volt }	
17C		.25 mfd., 100 volt }	
18	81737	First I. F. Transformer	2.00
19	81738	Second I. F. Transformer	2.00
20	81764	First detector tuning coil	1.00
21	81768	Antenna coil	1.25
22	81770	Oscillator coil	1.25
23	81774	Output transformer	3.00
24	81779	Speaker field coil	4.00
25	81800	110 volt 60 cy., power transformer	6.00
	81800	220 volt 60 cy., power transformer	6.25
26	81808	100,000 ohm ½ watt resistor	.20
27	81809	100,000 ohm ½ watt resistor	.20
28	81810	110,000 ohm 1 watt resistor	.20
29	81811	.00026 mfd., condenser	.25
30	81812	.00031 mfd., condenser	.25
31	81822	2.5 volt pilot light	.25
32	81829	1500 ohm watt resistor	.20
	81830	230 volt 60 cy., powertransf. (see 81800)	6.25
33	81869	Line Switch. (Separate unit used in phonograph chassis only. Part of volume control on standard chassis)	.60
	81870	Phono chassis type volume control (See 81722)	2.00
34		Phonograph pickup.	
35		Phonograph switch, mounted on back volume control in phonograph models.	

MISCELLANEOUS PARTS NOT SHOWN IN DIAGRAM

Diag. No.	Part No.	Description	List Price
	67236	Rubber tuning drive bushing	.02
	81839	4-prong socket	.12
	81840	5-prong socket	.12
	81843	6-prong socket	.20
	81608	R. F. coil shield	.20
	81623	Tube shield	.20
	81723	Ground clip	.10
	81805	Tuning dial and gear assembly (see 81879)	.60
	81817	First I. F. coil shield	.30
	81819	Second I. F. coil shield	.30
	81879	Celluloid tuning dial	.30
	36489	Steel washer	.10 ds.
	39903	Lock washer } Used for rubber mounting variable condenser.	.30 per C
	67711	Rubber washer	.05
	67712	Rubber bushing	.05
	67713	Steel bushing	.05

~ Stewart-Warner Model 109 ~

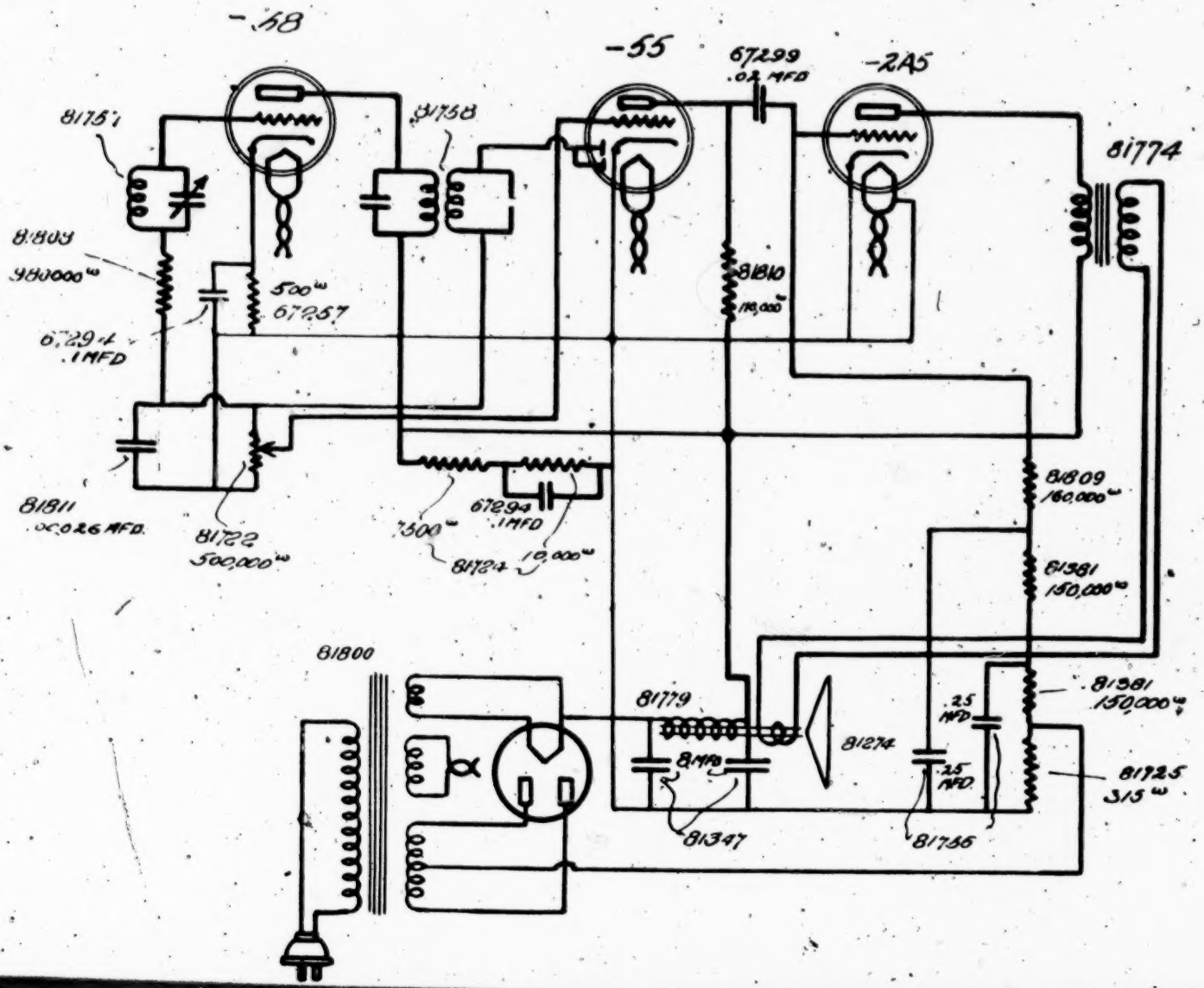

PLAINTIFFS' EXHIBIT NO. 95.
(Simplified diagram of set SW 109)

PLAINTIFFS' EXHIBIT No. 96.
(Copy of speaker circuit wiring diagram made on blackboard by Witness, Dr. Lee.)

470-
471

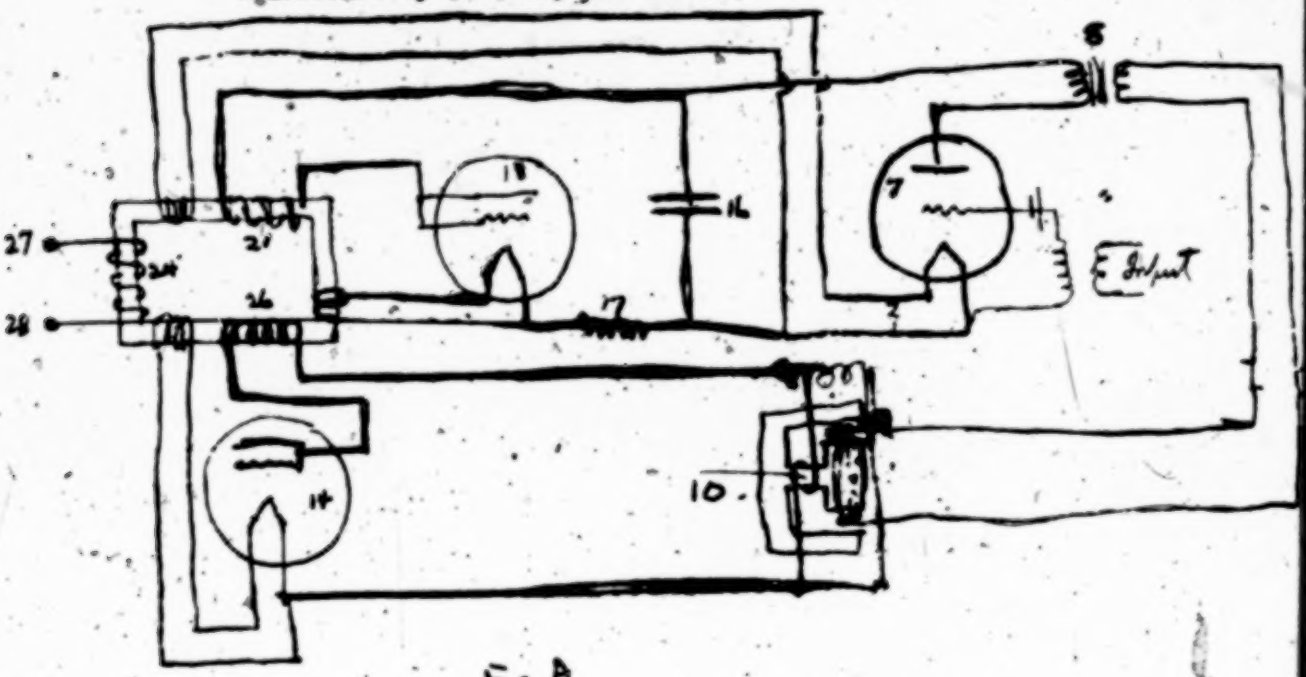

Fig A

Plfs X96

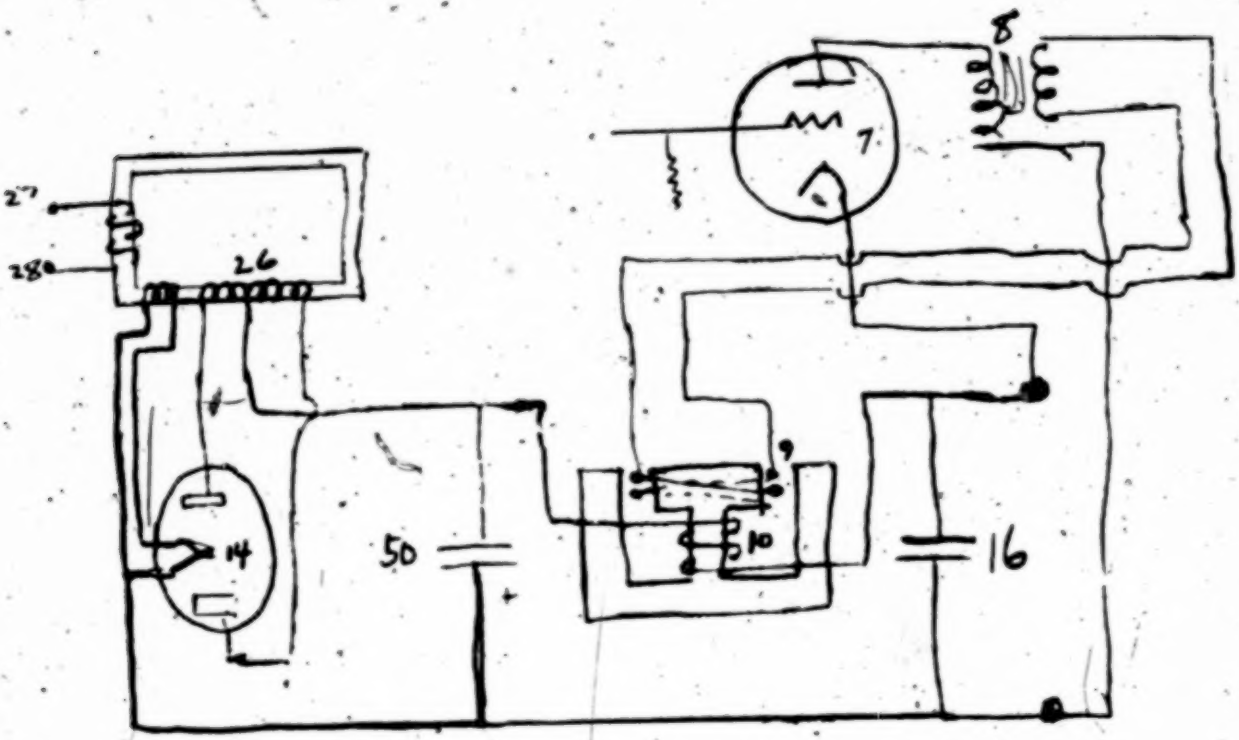

PLAINTIFFS' EXHIBIT No.97,
(Christian Science Herald, Jan.10.1928, Page 10)

736
472-473

RADIO

Electro-Dynamic Speaker Is Remarkable Development

Cone Fastened to Coil of Wire Instead of Driving Pin Excels on Low Notes

Many loudspeakers have been featured during the last few years, the majority being cones working on the electro-magnetic idea, carried to a very high point of development in the W. E. cone. This year has seen the introduction of a type of speaker for popular use which considerably exceeds the W. E. cone on the lower registers, and that is the electro-dynamic cone. We have never heard any reproduction of low tones that compare with our trials on these units. The following discussion by one of the Magnavox engineers is interesting, primarily because this company has specialized in electrodynamic speaker design for many years. His basic idea, combined with a cone air actuating device, is now a leading factor in set design which incorporates higher-priced apparatus.

By AUSTIN ARMER

Loudspeaker development for use with radio receiving sets, and more recently in connection with electric phonographs, has been of interest because few striking novelties in design have presented themselves. The horn type of speaker was standard construction a few years ago, until it gave way to the cone-speaker, which promised to displace the horn entirely. But before any such displacement took place, the horn type speaker took on a new lease of life by virtue of the use of a long air column of proper design. Thus at present the two types are equally important, and it therefore appears that perfection is to be realized only by the refinement of the driving unit, whether the actual sound source be a cone or an air column.

It was this realization that prompted the engineers of the Magnavox Company, at Oakland, Calif., to develop a driving unit of unique design, and of a type that would be free from two of the greatest evils of existing types, namely, the stiffness of the vibrating element, and the small distance through which this element was permitted to move.

Stiffness, especially in a cone speaker, causes distortion in two ways. First, it tends to give the speaker a natural period or resonance, which has the effect of causing certain notes in musical reproduction to be over-accentuated. Second, it prevents the reproduction of extremely low tones, because the energy of these low tones is not as great as some of the higher frequencies, and any resistance to the motion of the vibrating element tends to suppress the low tones more than the high.

Limiting the distance through which the vibrating element can move means limiting the sound energy available from the speaker, and this limitation is most noticeable in the low frequencies, since the cone or diaphragm must move through a greater distance when reproducing low frequencies than when reproducing high frequencies of the same energy.

The Magnavox Dynamic Speaker uses as a sound emitter a small paper cone, seven inches in diameter, and this cone is caused to vibrate to and fro, not by the magnetic attraction of an iron armature, but by the force exerted on a powerful magnetic field by the current in a small coil, which is mounted directly upon the cone. The construction of the unit is

The problem of exciting the powerful field magnet seems, when first considered, a serious obstacle, in view of the fact that about four watts of direct current power are required for this purpose. As a matter of fact, however, this problem has been solved by offering to the user of the speaker a choice of field coil windings. There are two standard windings available, one for use with battery-operated sets, and consuming six-tenths of an ampere at six volts, and another designed for operation at 100 volts, and consuming only 40 milliamperes. The six-volt type is designated as the R-4 unit, and the 100 volt as the R-5 unit.

The application of the R-5 unit to A. C. operated receiving sets demonstrates its flexibility of adaptation. Since the inductance is very high (from 20 to 30 henrys) it makes an excellent choke-coil in the filter system of a power pack. In case it becomes desirable to use the R-5 unit with a power pack already equipped with choke-coils, the field winding can be substituted for a portion of the resistance in the voltage divided circuit. For the information of those desiring to make this application, the resistance of the field winding is 2500 ohms.

Still another means of exciting the R-5 field coil is to connect it directly to a 110-volt, direct-current power source, in case the user is in a metropolitan district where the power service is direct current. Although a slight ripple, as from the direct current supply, or the residual ripple in a filter choke is not at all objectionable, the R-5 unit cannot be excited by alternating current.

So far nothing has been mentioned concerning the installation of the speaker unit. If the speaker is purchased in a cabinet as furnished by the Magnavox Company (either the Beverly, Aristocrat, or Lobby model), the unit is provided with proper baffle and its mounting need be given no further consideration. But if it is desired to purchase either the R-4 or R-5 unit as such, and mount it in a console or other cabinet which may be at hand, certain precautions must be taken if the best performance is to be realized.

Because the Magnavox Dynamic Speaker uses for a sound-emitter a small cone acting as a plunger or piston, the back of the cone radiates sound waves just as the front does, but out of phase with the waves emitted by the front surface. If the speaker unit is permitted to operate in the open, the waves issuing from the front of the cone will almost completely interfere with those issuing from the back, and the result will be very low volume and complete absence of any low tones.

Now if the speaker be placed in a baffle in such a manner that the air cannot circulate from the front to the back of the cone, the destructive interference previously encountered disappears, and the true quality of the speaker is realized. The size of the baffle is not critical, but the greater its area, the greater will be the response to the very low frequencies. A minimum width of 20 inches should be observed in designing a baffle, but this restriction does not mean that the cabinet containing the speaker be not less than 20 inches wide. This is because the sides of the cabinet as well as the front have a certain baffling effect.

The material of the baffle is not critical, but should not be too thin. Wood is the most readily used material, and is thoroughly satisfactory as long as it is over ¾ of an inch thick. If the baffle is too thin, it will introduce an unnatural drummy quality of reproduction.

In conclusion, let it be stated that the Dynamic Speaker will undoubtedly be the favorite of manufacturers of high-class receiving sets during 1928, and some of the leading manufacturers of quality sets are already using it as standard equipment. Consequently, anyone desiring the utmost in quality reproduction from an existing set should investigate the Dynamic Speaker.

IN THE SH

THE Clyde Line is extending its services to include Havana on the regular route of the steamships Shawnee and Iroquois. The vessels proceed from New York to Miami, where they spend the day and depart in the evening for an overnight sail to Havana. The return trip is made that evening to Miami and thence to New York.

A series of all-expense tours have been worked out by the Clyde Line, permitting stopovers in the Cuban capital and a feature of the trips is the possibility of using tickets interchangeably with the Ward Line, which maintains a direct New York-Havana service, thus permitting a return to New York without layover at Miami.

In addition to these ships operating in the southern Florida and Cuban route, the Clyde Line maintains ships between New York, Charleston and Jacksonville, all of the vessels of the fleet having been built within the past two years in connection with the comprehensive replacement program in which the company engaged.

without
agencies
the ass.
"Agwi"
dies), it
Porto R

The
North
reame
rive in
under
necessa
ship B
which t.
and whic
home port

Success at
Mercer of th
Board with
ment is such
or more a wo
shipping board
for the tests
supply. It lik
thorough tests
the Diesel typ
tion engine, a

Details of Magnavox Cone

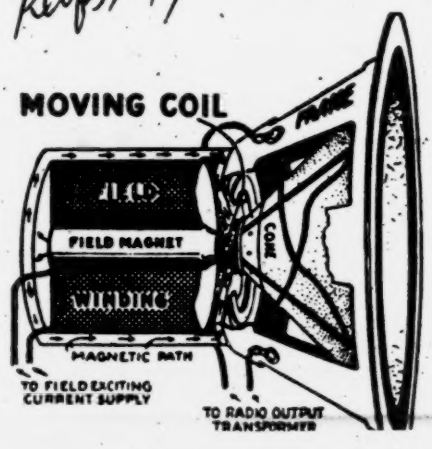

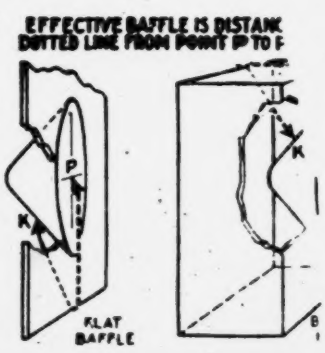

Figure 2

Electro-Dynamic Speaker Is Remarkable Development

Cone Fastened to Coil of Wire Instead of Driving Pin Excels on Low Notes

Many loudspeakers have been featured during the last few years, the majority being cones working on the electro-magnetic idea, carried to a very high point of development in the W. E. unit. This year has seen the introduction of a type of speaker for popular use which considerably exceeds the W. E. cone on the lower registers, and that is the electro-dynamic cone. We have never heard any reproduction of low tones that compare with our trials on these units. The following discussion by one of the Magnavox engineers is interesting, primarily because this company has specialized in electrodynamic speaker design for many years. His basic idea, combined with a cone air actuating device, is now a leading factor in set design which incorporates higher-priced apparatus.

By AUSTIN ARMER

Loudspeaker development for use with radio receiving sets, and more recently in connection with electric phonographs, has been of interest because few striking novelties in design have presented themselves. The horn type of speaker was standard construction a few years ago, until it gave way to the cone-speaker, which promised to displace the horn entirely. But before any such displacement took place, the horn type speaker took on a new lease of life by virtue of the use of a long air column of proper design. Thus at present the two types are equally important, and it therefore appears that perfection is to be realized only by the refinement of the driving unit, whether the actual sound source be a cone or an air column.

It was this realization that prompted the engineers of the Magnavox Company, at Oakland, Calif., to develop a driving unit of unique design, and of a type that would be free from two of the greatest evils of existing types, namely, the stiffness of the vibrating element, and the small distance through which this element was permitted to move.

Stiffness, especially in a cone speaker, causes distortion in two ways. First, it tends to give the speaker a natural period or resonance, which has the effect of causing certain notes in musical reproduction to be over-accentuated. Second, it prevents the reproduction of extremely low tones, because the energy of these low tones is not as great as some of the higher frequencies, and any resistance to the motion of the vibrating element tends to suppress the low tones more than the high.

Limiting the distance through which the vibrating element can move means limiting the sound energy available from the speaker, and this limitation is most noticeable in the low frequencies, since the cone or diaphragm must move through a greater distance when reproducing low frequencies than when reproducing high frequencies of the same energy.

The Magnavox Dynamic Speaker uses as a sound emitter a small paper cone, seven inches in diameter, and this cone is caused to vibrate to and fro, not by the magnetic attraction of an iron armature, but by the force exerted on a powerful magnetic field by the current in a small coil, which is mounted directly upon the cone. The construction of the unit is such that this coil and the attached cone can move about a quarter of an inch without meeting any more resistance than that of the cone suspension. So lightly suspended is this cone, that one can deflect it by merely blowing on it.

The problem of exciting the powerful field magnet seems, when first considered, a serious obstacle, in view of the fact that about four watts of direct current power are required for this purpose. As a matter of fact, however, this problem has been solved by offering to the user of the speaker a choice of field coil windings. There are two standard windings available, one for use with battery-operated sets, and consuming six-tenths of an ampere at six volts, and another designed for operation at 100 volts, and consuming only 40 milliamperes. The six-volt type is designated as the R-4 unit, and the 100 volt as the R-5 unit.

The application of the R-5 unit to A. C. operated receiving sets demonstrates its flexibility of adaptation. Since the inductance is very high (from 20 to 30 henrys) it makes an excellent choke-coil in the filter system of a power pack. In case it becomes desirable to use the R-5 unit with a power pack already equipped with choke-coils, the field winding can be substituted for a portion of the resistance in the voltage divided circuit. For the information of those desiring to make this application, the resistance of the field winding is 2500 ohms.

Still another means of exciting the R-5 field coil is to connect it directly to a 110-volt, direct current power source, in case the user is in a metropolitan district where the power service is direct current. Although a slight ripple, as from the direct current supply, or the residual ripple in a filter choke is not at all objectionable, the R-5 unit cannot be excited by alternating current.

So far nothing has been mentioned concerning the installation of the speaker unit. If the speaker is purchased in a cabinet as furnished by the Magnavox Company (either the Beverly, Aristocrat, or Lobby models), the unit is provided with proper baffle and its mounting need be given no further consideration. But if it is desired to purchase either the R-4 or R-5 unit as such, and mount it in a console or other cabinet which may be at hand, certain precautions must be taken if the best performance is to be realized.

Because the Magnavox Dynamic Speaker uses for a sound-emitter a small cone acting as a plunger or piston, the back of the cone radiates sound waves just as the front does, but out of phase with the waves emitted by the front surface. If the speaker unit is permitted to operate in the open, the waves issuing from the front of the cone will almost completely interfere with those issuing from the back, and the result will be very low volume and complete absence of any low tones.

Now if the speaker be placed in a baffle in such a manner that the air cannot circulate from the front to the back of the cone, the destructive interference previously encountered disappears, and the true quality of the speaker is realized. The size of the baffle is not critical, but the greater its area, the greater will be the response to the very low frequencies. A minimum width of 20 inches should be observed in designing a baffle, but this restriction does not mean that the cabinet containing the speaker be not less than 20 inches wide. This is because the sides of the cabinet as well as the front have a certain baffling effect.

The material of the baffle is not critical, but should not be too thin. Wood is the most readily used material, and is thoroughly satisfactory as long as it is over ¾ of an inch thick. If the baffle is too thin, it will introduce an unnatural drummy quality of reproduction.

In conclusion, let it be stated that the Dynamic Speaker will undoubtedly be the favorite of manufacturers of high-class receiving sets during 1928, and some of the leading manufacturers of quality sets are already using it as standard equipment. Consequently, anyone desiring the utmost in quality reproduction from an existing set should investigate the Dynamic Speaker.

IN THE SH

THE Clyde Line is extending its services to include Havana on the regular route of the steamships Shawnee and Iroquois. The vessels proceed from New York to Miami, where they spend the day and depart in the evening for an overnight sail to Havana. The return trip is made that evening to Miami and thence to New York.

A series of all-expense tours have been worked out by the Clyde Line, permitting stopovers in the Cuban capital and a feature of the trips is the possibility of using tickets interchangeably with the Ward Line, which maintains a direct New York-Havana service, thus permitting a return to New York without layover at Miami.

In addition to these ships operating in the southern Florida and Cuban route, the Clyde Line maintains ships between New York, Charleston and Jacksonville, all of the vessels of the fleet having been built within the past two years in connection with the comprehensive replacement program in which the company engaged.

without agencies the ass. "Agwi" diea), it Porto R

The North C renamed rive in under t necessa ship B which t and whic home port

Success at Mercer of th Board with ment is such or more a vo, shipping board for the tests supply. It lik thorough tests the Diesel typ tion engine, a

Details of Magnavox Cone

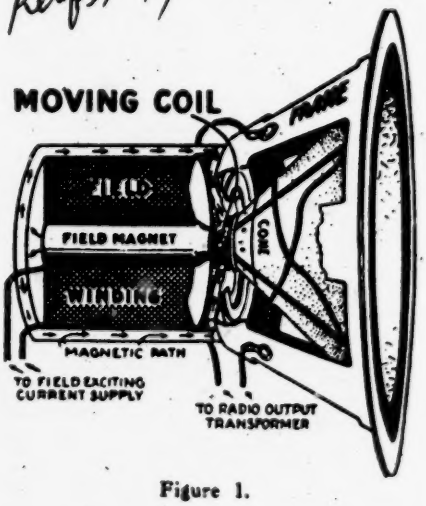

Figure 1.

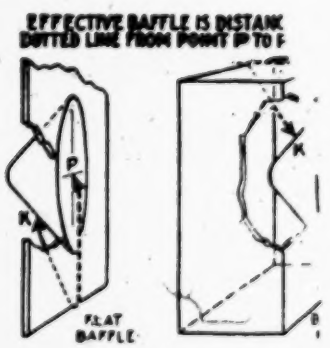

Figure 2

474 — 475

PLAINTIFFS' EXHIBIT NO. 98, Sheet 1
(Letter to Magnavox from Dunmore dated June 10,1922.

2371 Champlain St. N.W.,
Washington, D.C.,
June 10, 1922.

The Magnavox Company,
Oakland, Calif.

Dear Sirs Attention: The General Manager

Mr. T.D. Lovell and I have on filed in the United States Patent Office an application for letters patent on an audio Power Amplifier, which is operated entirely from the 110 volt A.C. house lighting circuit including the D.C. field coil of the magnavox.

You have undoubtedly seen press notices of the complete radio-audio amplifier which we have developed (See lower right hand colum, page 27 June issue of Radio) and which also operates entirely from the 110 volt A.C. line, no A or B batteries being required. It is expected that this device will soon be on the market and it appears to us that the combination of it with your power amplifier and magnavox worked on the principles of our application would make an admirable combination.

As the elimination of batteries is bound to come, or rather has come, we think it will be worth your while to keep up to date and suggest that you arrange to have a representative interview us.

Yours truly,

476-477

PLAINTIFFS' EXHIBIT No. 98,
Sheet 2.
(Reply of Magnavox to letter of Dunmore of June 10, 1922).

THE MAGNAVOX COMPANY

[redacted]

GENERAL OFFICE AND FACTORY
2701-2708 EAST 16TH STREET
OAKLAND, CALIFORNIA

June 19, 1922

Mr. F. M. Dunmore,
2371 Champlain St. N. W.,
Washington, D. C.

Dear Sir:

We are very much interested in your letter of June 10th, although it is only one of several which have recently come to us regarding the use of AC on power amplifier.

It is manifestly impossible for us to judge the merits of such an apparatus without an extensive test and we would be pleased to have you submit one sample to our engineers for test in order that we may determine its value to us.

Yours very truly,

THE MAGNAVOX COMPANY

By H Metcalf

H. E. Metcalf
Sales Dept.

HEM:DES

478-479

PLAINTIFFS' EXHIBIT No. 98, Sheet 3.
(Reply of Dunmore to letter of Magnavox of June 19, 1922)

4371 Champlain Av. N.W.,
Washington, D.C.,
June 28, 1922.

Mr. H. W. Metcalf,
The Magnavox Co.,
Oakland, Calif.

Dear Sir:

Subject: Power Amplifier Using C Supply for Plate and Filament.

I have received your letter of June 19, 1922. I regret to state that I am not in a position financially to furnish you with a complete AC Power Amplifier. In the radio laboratory where Mr. Lowell and I are working, we were able to obtain the necessary equipment which we connected up and, after considerable experimentation, we obtained a workable device which we are covering with a patent application.

We should be glad to duplicate the circuit arrangement and make tests should it be possible for one of your representative engineers to be here to witness the tests.

If you will refer to the forth coming July issue of the Journal of the American Institute of Engineers, you will find an article by Mr. Lowell on a Radio-audio Amplifier using AC Power to Supply Plate Voltage and Filament Current. The audio circuit of this amplifier will show to some extent, the method we are using but the paper does not go into details.

It would be appreciated if you will bring this letter to the attention of your engineers, as we are sure that he will find, by reference to the above mentioned article, that we have something that will at least warrant an investigation.

Yours truly,

PLAINTIFFS' EXHIBIT No. 99, Sheet).
(Letter to General Electric Co., July 28, 1923)

July 28, 1923.

National Lamp Works,
General Electric Co.,
Schenectady, N.Y.

Gentlemen:

Will you please quote me prices in dozen lots for tubes containing just a filament and a plate electrode on the order of the old Fleming valve. I am desirous of using a number of these old type of tubes and would like to know at what rate you could supply me.

Yours very truly,

JBB:LM

GENERAL ELECTRIC COMPANY
GENERAL OFFICE
SCHENECTADY, N. Y.

In Reply Refer to

PLAINTIFFS' EXHIBIT NO. 99, Sheet 2.
(Reply of General Electric Co. dated August 3, 1933 to letter of July 28, 1933).

August 3, 1923.

Mr. John B. Brady,
Ouray Building,
Washington, D.C.

Dear Sir:-

This is in reply to your recent letter requesting prices on two element tubes of the Fleming Valve Type. We already manufacture two element tubes known as Kenotrons and it may that either our UV-216 which is a 20 watt tube or our UV-217 which is a 100 watt tube might answer your purpose. These tubes are on sale at most Radio Supply Houses, and we therefore, would suggest that you try either one of these tubes to see whether or not they would not meet your requirements.

Very truly yours,

SUPPLY DEPARTMENT

JHC:ELM

PLAINTIFFS' EXHIBIT NO. 100, Sheet 1,
(Letter to Westinghouse Elec. & Mfg. Co. dated July 28, 1923).

July 28, 1923.

estinghouse Lamp Works.
165 Broadway,
New York City.

Gentlemen:

will you please quote me prices in dozen lots for tubes containing just a filament and a plate electrode on the order of the old Fleming valve. I am desirous of using number of these old type of tubes and would like to know at what price you could supply me.

Yours very truly,

JBB:

PLAINTIFFS' EXHIBIT NO. 100, Sheet 2.

Reply of

Westinghouse Electric & Manufacturing Company

165 Broadway, New York

August 3, 1923

John B. Brady
Ouray Bldg.
Washington, D. C.

Dear Sir:

We have your letter of July 28 addressed to the Westinghouse Lamp Co. and note that you require a tube containing just a filament and plate electrode. You will please note that an order to build such a tube will seriously interfere with our present production as the tube would have to be built in our Laboratory and Research Department and the cost would therefore be exceedingly excessive, aside from the fact that delivery would be considerably delayed.

If you cannot secure these tubes through other sources and are still interested regardless of cost, we will be very glad to take the matter up with our Research Department and determine if we could furnish such a tube and at what price.

PD has not seen this

Very truly yours,

T. L. SCHWARTZ

TLS/AT

ASST. MGR. RADIO DIVISION

PLAINTIFFS' EXHIBIT NO. 101, SHEET 1, (License to Brandes Products Corporation, dated Oct. 1, 1927)

LICENSE TO BRANDES PRODUCTS CORPORATION

- - - - - - - -

THIS AGREEMENT made this 1st day of October, 1927, by and between FRANCIS W. DUNMORE, of Washington, District of Columbia, PERCIVAL D. LOWELL, of Richmond Hill, New York, and JUBILIER CONDENSER CORPORATION, a Delaware corporation, having a place of business at 4377 Bronx Boulevard, New York City, (hereinafter called the Licensors), and BRANDES PRODUCTS CORPORATION, a corporation existing under the laws of the State of New Jersey, and having its principal office and place of business at 203 Mt. Pleasant Avenue, Newark, New Jersey, Licensee:

WITNESSETH:

WHEREAS, Lowell and Dunmore are the inventors of certain new and useful improvements in radio receiving apparatus wherein the circuits of electron tubes used in radio reception are supplied from the ordinary house lighting current without the employment of primary or secondary batteries, for which they have obtained Letters Patent of the United States No. 1,455,141, dated May 15, 1923; and Power Amplifiers for Loud Speakers for which they have obtained Letters Patent No. 1,606,212, dated November 9, 1926; and

WHEREAS, P. D. Lowell has filed applications for Letters Patent on January 13, 1925, covering improvements upon the circuits covered by the present patents and Serially Numbered 2214 and 2215;

WHEREAS, F. W. Dunmore is the inventor of certain improvements in Signal Receiving Circuits covered by Letters Patent 1,655,117, dated July 5, 1927;

WHEREAS, under date of October 20, 1924, said P. D. Lowell and F. W. Dunmore entered into an agreement with Jubilier Condenser & Radio Corporation (Licensors name as of October 20, 1924), in which they reserved the right to grant a license under the aforesaid inventions to Brandes Products Corporation; and

WHEREAS, Jubilier Condenser Corporation owns and controls certain inventions relating to the operation of radio receiving apparatus with power derived from the usual alternating current residence lighting circuit for which inventions the following applications for Letters Patent are now pending:

Ser. No.	Title	Inventor	Date
726,841	Thermionic Valves	H. W. Houck	July 18, 1924
736,182	Conductors and Process of Making Same	J. V. Capicotto	Sept. 5, 1924
745,897	Thermionic Valves	H. W. Houck	Oct. 24, 1924
D-[illegible],392	Design for Casings for Electrical Apparatus	H. A. Van Deventer	Oct. 8, 1924
D-[illegible],094	Design for Casings for Electrical Apparatus	E. D. Forbes	Oct. 8, 1924
D-[illegible],905	Design for Casings for Electrical Apparatus	E. D. Forbes	Oct. 8, 1924
D-[illegible],117	Design for Casings for Electrical Apparatus	H. W. Houck	Oct. 18, 1924
745,859	Filtering Arrangement for Direct Current	H. W. Houck	Oct. 24, 1924
745,660	Stacks of Electrical Appliances	H. W. Houck	Oct. 24, 1924
745,661	Apparatus for Filtering Electrical Currents	H. W. Houck	Oct. 24, 1924
745,697	Stacks of Electrical Appliances	H. A. Van Deventer	Oct. 24, 1924
746,437	Containers for Electrical Apparatus	E. D. Forbes	Oct. 28, 1924

5

Page 2. PLAINTIFFS' EXHIBIT NO. 101 SHEET 2, 490- 491

Ser. No.	Title	Inventor	Date
14,313	Controlling Means for Rectifying Apparatus	H. J. Van Deventer	Mar. 11, 1925
23,362	Rectifiers	H. W. Houck	Apr. 15, 1925
28,402	Method for Controlling Electrical Power	H. J. Van Deventer	May 6, 1925
32,717	Frequency Changers	H. W. Houck	May 21, 1925
34,914	Electrical Transformers	A. Nyman	June 1, 1925
66,386	Electrical Rectifiers	A. Nyman	Oct. 31, 1925
90,807	A.C. Operated Radio Sets.	A. Nyman	Feb. 26, 1926
95,321	Rectifying and Filtering Apparatus	A. Nyman	Mar. 17, 1926
95,725	Method of Energizing Filaments	A. Nyman & G. V. Peck	Mar. 18, 1926
109,498	Electron Tube Filaments	H. W. Houck	May 17, 1926
109,499	Filter Systems	H. W. Houck	May 17, 1926
109,500	Electrical Filters	H. W. Houck	May 17, 1926
157,487	Rectifiers with Phase-Multiplying Devices	A. Nyman	Sept. 14, 1926

WHEREAS, Dubilier Condenser Corporation owns and controls certain inventions relating to Radio Receiving Circuits particularly straight line frequency tuning condensers for which applications for Letters Patent are pending as follows:

715,627	Condenser	A. Nyman	May 24, 1924
726,368	Variable Condensers	A. Nyman	July 19, 1924
145,028	Condenser	A. Nyman	Oct. 29, 1926

WHEREAS, Licensee is desirous of acquiring a license to manufacture, use and sell apparatus under the aforementioned Letters Patent, and to acquire a license under all of the said inventions covered by the applications for Letters Patent hereinbefore mentioned.

NOW, THEREFORE, for and in consideration of the premises and the covenants hereinafter recited and to be faithfully performed, and the sum of Five Thousand ($5,000.00) Dollars by Licensee to Lowell and Dunmore in hand paid as advance royalties, the receipt of which is hereby acknowledged, it is understood and agreed as follows:

1. Licensors hereby give and grant to the Licensee in accordance with the terms and conditions hereinafter stated, a non-exclusive license under said patents and any patents that may issue on any of the aforesaid applications together with any continuations, division or reissue thereof, to manufacture and to use and sell, (except as hereafter noted but including the right to export to all foreign countries) for the life thereof, unless this agreement be terminated as hereinafter provided, current supply apparatus, power amplifiers, loud speakers, radio receiving sets, battery substitutes, and/or electric phonographs embodying said inventions or any of them, and parts thereof or therefor, except that this license will not be effective to permit Licensee to engage in the manufacture of devices hereunder within ten miles of the territorial limits of the city of Philadelphia, Pennsylvania, and this license will not be effective to permit Licensee to engage in the manufacture of electrical relays actuated by incoming signals.

2. Licensee covenants to pay to Lowell and Dunmore during the life of this

[illegible]	Title	Inventor	Date
14,313	Controlling Means for Rectifying Apparatus	H. J. Van Deventer	Mar. 11, 1925
23,362	Rectifiers	H. W. Houck	Apr. 15, 1925
28,402	Method for Controlling Electrical Power	H. J. Van Deventer	May 6, 1925
32,717	Frequency Changers	H. W. Houck	May 2[illegible], 1925
34,914	Electrical Transformers	A. Nyman	June 1, 1925
66,386	Electrical Rectifiers	A. Nyman	Oct. 31, 1925
80,827	A.C. Operated Radio Sets	A. Nyman	Feb. 26, 1926
86,321	Rectifying and Filtering Apparatus	A. Nyman	Mar. 17, 1926
86,723	Method of Energizing Filaments	A. Nyman & G. V. Peck	Mar. 18, 1926
109,498	Electron Tube Filaments	H. W. Houck	May 17, 1926
109,499	Filter Systems	H. W. Houck	May 17, 1926
109,500	Electrical Filters	H. W. Houck	May 17, 1926
157,487	Rectifiers with Phase-Multiplying Devices	A. Nyman	Sept. 14, 1926

WHEREAS, Dubilier Condenser Corporation owns and controls certain inventions relating to Radio Receiving Circuits particularly straight line frequency tuning condensers for which applications for Letters Patent are pending as follows:

715,627	Condenser	A. Nyman	May 14, 1924
726,988	Variable Condensers	A. Nyman	July 19, 1924
145,028	Condenser	A. Nyman	Oct. 29, 1926

WHEREAS, Licensee is desirous of acquiring a license to manufacture, use and sell apparatus under the aforementioned Letters Patent, and to acquire a license under all of the said inventions covered by the applications for Letters Patent hereinbefore mentioned.

NOW, THEREFORE, for and in consideration of the premises and the covenants hereinafter recited and to be faithfully performed, and the sum of Five Thousand ($5,000.00) Dollars by Licensee to Lowell and Dunmore in hand paid as advance royalties, the receipt of which is hereby acknowledged, it is understood and agreed as follows:

1. Licensors hereby give and grant to the Licensee in accordance with the terms and conditions hereinafter stated, a non-exclusive license under said patents and any patents that may issue on any of the aforesaid applications together with any continuations, division or reissue thereof, to manufacture and to use and sell, (except as hereafter noted but including the right to export to all foreign countries) for the life thereof, unless this agreement be terminated as hereinafter provided, current supply apparatus, power amplifiers, loud speakers, radio receiving sets, battery substitutes, and/or electric phonographs embodying said inventions or any of them, and parts thereof or therefor, except that this license will not be effective to permit Licensee to engage in the manufacture of devices hereunder within ten miles of the territorial limits of the city of Philadelphia, Pennsylvania, and this license will not be effective to permit Licensee to engage in the manufacture of electrical relays actuated by incoming signals.

2. Licensee covenants to pay to Lowell and Dunmore during the life of this agreement a minimum annual royalty of Five Thousand ($5,000.00) Dollars, the first of such payments having been made at the execution thereof as hereinbefore recited. Royalty at the rate of Fifty Cents ($0.50) per combined A, B, or C power supply apparatus, radio receiving sets equipped therewith, separate A or B power supply apparatus, loud speakers with power amplifier equipment or any other embodiment of said inventions shall be com-

puted upon each licensed device sold by the Licensee except that in the case of B battery eliminators sold as single units and electric phonographs, the royalty shall be computed at Twenty-five Cents ($0.25) per unit.

3. A maximum royalty per year payable to Lowell and Dunmore is hereby fixed as Seven Thousand Five Hundred Dollars ($7,500.00) to cover all Socket Power Apparatus which may be manufactured under this agreement, that is to say, A, B or C battery eliminators or substitutes, B battery kits, or any combination of these devices, complete radio receiving sets or attachments therefor for operating the receiving apparatus from the usual house lighting circuit without the employment of batteries, power amplifiers, loud speakers and electric phonographs; and the parties hereby acknowledge that no further payments over and above the said Seven Thousand Five Hundred ($7,500.00) Dollars per year shall be required.

4. This license shall extend to all embodiments of the inventions covered by any patent hereunder, that is, for the manufacture, use and sale of A, B, or C battery eliminators or substitutes, B battery kits, or any combination of these devices, complete radio receiving sets or attachments therefor for operating the receiving apparatus from the usual house lighting circuit without the employment of batteries, power amplifiers and loud speakers and electric phonographs, but not electrical relays actuated by incoming signals, and it is specifically understood that no restrictions shall be placed upon the uses to which said apparatus may be put. Only one royalty shall be computed on account of a single complete apparatus such as a combined power operated speaker and power operated receiving set or a separate power operated speaker or a separate power operated receiving set, electric phonograph or other unit apparatus as above set forth; and the Licensee shall not be liable for royalties upon any apparatus returned by purchasers for credit and shall have the right to deduct the amount of any such royalties already computed from the amount of royalties that may subsequently accrue. No royalty shall be paid on spare parts or apparatus that are sold as repairs or furnished as replacements.

5. In order to maintain this license, Licensee covenants to pay to Lowell and Dunmore a minimum royalty of Five Thousand ($5,000.00) Dollars during any year, and if during any year the sale of apparatus units shall not amount to said minimum royalty, Licensee shall be required to pay the deficit or forfeit the right to this license.

6. Licensee covenants to pay the royalties due under this agreement in semi-annual payments on July thirtieth and January thirtieth, the said payments to include all royalties due and payable up to within thirty days of the said dates. Apparatus units shall be considered to be sold and to be included in the royalty report to Licensors when billed and shipped.

7. All royalty payments under this agreement shall be made to Percival D. Lowell and Francis W. Dunmore, at 3411 Scott Street, Northwest, Washington, D. C., unless notified otherwise by the inventors. Dubilier Condenser Corporation agrees to accept in lieu of royalty under this agreement the condenser business of the Licensee for apparatus embodying the subject matter of the inventions herein and agrees to furnish such condensers as it manufactures to Licensee, on Licensee's order. Licensee is not prevented by this agreement from purchasing condensers from other manufacturers up to 56% of Licensee's total annual requirements in dollars value. If purchases are made of other condensers in an amount exceeding 55% of the Licensee's total annual requirements, then the Licensee shall pay to Dubilier Condenser Corporation a sum of $150.00 for every 1% more than 55% so purchased. In figuring the total requirements, the licensee is permitted to exclude from consideration under this restriction clause, only the 55% above mentioned, and/or such condensers ordered, which after acceptance Dubilier Condenser Corporation fails to deliver within the time specified on the licensee's order and licensee does not accept such delivery; providing however, that licensee's delivery requirements are not unreasonable. Accounting to Dubilier Condenser Corporation shall be made at times named in paragraph #6 hereof and payment separate and apart from the payments to Lowell and Dunmore made to Dubilier Condenser Corporation, 4377 Bronx Boulevard, New York City, N.Y.

8. The Licensors agree that in the event that the patent situation under this agreement shall be sold, assigned or extended to Radio Corporation of America, or its associated interests, with the right to extend such protection automatically to licensees of Radio Corporation of America or its associated interests to whom Licensee may be paying royalty on the same apparatus which is being accounted for under this agreement, that Licensors shall stand ready to protect Licensee against the payment of

a double royalty by waiving the payment of royalties under this agreement at the option of the Licensee.

9. Licensors agree to notify Licensee in the event that rights under the patents and the inventions embodied in this agreement may pass automatically to licensees of Radio Corporation of America, or its associated interests, but it is specifically understood that the grant of a license to Radio Corporation of America or its associated interests without the right of automatic extension to licensees of Radio Corporation of America or its associated interests shall not operate to relieve Licensee herein from the payment of royalties to Licensor, and the Licensee shall be held liable for the payment of royalties hereunder up to the date of such extension agreement, if and when, consummated.

10. In the event that Radio Corporation of America or its associated interests, or any other competitive interest acquire Dubilier Condenser Corporation, all parties hereby agree that Brandes Products Corporation may terminate this agreement, and all rights revert to original owners as though this license had not existed.

11. Licensee agrees to keep proper books of account with reference to all apparatus units which it may manufacture and sell embodying the aforesaid inventions, modifications and improvements and shall render semi-annual statements or extracts from said books showing the total amount of such apparatus units as may have been manufactured and sold during the preceding royalty period and the amount of royalty payable, the said statements to be rendered at the time of making the royalty payments designated in paragraphs 5 and 6 hereof.

12. The Licensee is required to mark all apparatus manufactured and sold by it embodying the invention covered by the said Letters Patent 1,455,141, 1,606,212 and 1,635,117 with the number or date of the said patents as well as the number or dates of other patents which may be issued within this agreement.

13. The Licensee hereby admits the validity of the said patents 1,455,141, 1,606,212 and 1,635,117 and agrees that the scope thereof embraces any radio apparatus operated from an alternating current supply in combination with rectifying means wherein the rectified current is used to replace the usual A battery, B battery, or both; and that the patents cover devices commonly termed "A or B battery eliminators" power amplifiers, power operated loud speakers and electric phonographs whether supplied with radio receivers or separate for use therewith.

14. The Licensee hereby covenants and agrees not to contest the validity of said patents 1,455,141, 1,606,212 and 1,635,117, or to aid others to do so in any manner during the life of this agreement or during the pendency of any suit begun during the pendency of this agreement, and to respect the said patents until the final decision of a Court of last resort shall be delivered. If, as a result of such final Court decision or termination of pending interference proceedings, substantial protection for the main subject matter of this agreement is not afforded by said patents, or if adversely held patents are declared to prevent the manufacture of devices under said patents, the Licensee may terminate this agreement if it shall so elect, by giving sixty days written notice to Licensors and paying all royalties due and accrued to the date of termination.

15. The Licensee hereby covenants and agrees to aid and assist Licensors in protecting the said patents during the life of this agreement by bringing to Licensors' attention any cases of manufacture and sale of infringing devices that may come to the Licensee's notice and further covenants and agrees to aid and assist in the prosecution and defense of suits respecting the said patents.

16. In case of the termination of this agreement, for any cause whatsoever, all rights and obligations of the parties hereunder shall cease and they shall have free and unprejudiced rights to prosecution and defense in all matters relating to said patents the same as if this agreement had not been made.

17. If any controversy shall arise between the parties as to the performance of any obligations under this agreement, the matter in controversy shall be submitted, at option of either party, to three arbitrators who shall have power to decide the matter in controversy, and to determine what, if any, amount shall be paid by either party to the other as liquidated damages for any breach of this agreement, and such party agrees to pay to the other any damages that may be assessed by the arbitrators. Upon such contingency, each party shall designate one arbitrator, and these two shall

appoint a third arbitrator. The expense of the arbitration shall be borne by the losing party or apportioned between the parties as the arbitrators may direct.

18. This agreement and the covenants herein contained shall be binding upon and inure to the benefit of the successors and assigns of the Licensors and to the successors in whole of the business of the Licensee, it being expressly understood and agreed that the license hereby granted is otherwise indivisable and non-transferable or non-assignable by the Licensee. All rights under this agreement shall terminate upon insolvency or bankruptcy of Licensee and the rights conveyed thereunder shall not pass as an asset of Licensee under conditions of insolvency.

IN WITNESS WHEREOF, Brandes Products Corporation and Dubilier Condenser Corporation have caused this instrument to be executed by their officers thereunto duly authorized and their corporate seals affixed hereto, and Percival D. Lowell and Francis W. Dunmore have signed and sealed this instrument the day and year first above written.

BRANDES PRODUCTS CORPORATION

By FREDERICK DIETRICH (signed)
President

Attest:

CHAS GILBERT (signed)

DUBILIER CONDENSER CORPORATION

By FRED D. WILLIAMS (signed)
President

Attest:

W. J. SMITH (signed)
Secretary

PERCIVAL D. LOWELL (signed)
Percival D. Lowell

Witness:

HENRY H. HAYHOE (signed)

FRANCIS W. DUNMORE (signed)
Francis W. Dunmore

Witness:

FRANK H. ROBERTS (signed)

STATE OF NEW JERSEY)
) SS:
COUNTY OF ESSEX)

On this 10th day of October, 1927, personally appeared before me FREDERICK DIETRICH, to me known and known to me to be the President of BRANDES PRODUCTS CORPORATION, of Newark, New Jersey, and he duly acknowledged to me that he executed the foregoing instrument on behalf of said Corporation, and that he was fully authorized to do so.

WITNESS my hand and Notarial Seal.

J. HOLLIS HALL (signed)
Notary Public.

STATE OF NEW YORK)
) SS:
COUNTY OF NEW YORK)

On this 5th day of October, 1927, personally appeared before me FRED D. WILLIAMS, to me known and known to me to be the President of the DUBILIER CONDENSER CORPORATION of New York City, and he duly acknowledged to me that he executed the foregoing instrument on behalf of the said Corporation, and that he was fully authorized to do so.

WITNESS my hand and Notarial Seal.

IRMA E. BENNER (signed)
Notary Public.

STATE OF NEW YORK)
) SS:
COUNTY OF QUEENS)

On this 11th day of October, 1927, personally appeared PERCIVAL D. LOWELL, to me known and known to me to be the individual named in and who executed the foregoing instrument, and he duly acknowledged to me that he executed the same of his own free will for the purpose therein set forth.

WITNESS my hand and Notarial Seal.

REYNOLD L. JORDAN (signed)
Notary Public.

CITY OF WASHINGTON)
) SS:
DISTRICT OF COLUMBIA)

On this 30th day of Sept., 1927, personally appeared FRANCIS W. DUNMORE, to me known and known to me to be the individual named in and who executed the foregoing instrument, and he duly acknowledged to me that he executed the same for the purpose therein set forth.

WITNESS my hand and Notarial Seal.

KATHERINE J. TENTON (signed)
Notary Public. D...

PLAINTIFFS' EXHIBIT NO. 102, Sheet 1.
(License to Grigsby-Grunow-Hinds Co. dated Nov. 28, 1927.)

LICENSE AGREEMENT

THIS AGREEMENT made and entered into this 18th day of November, 1927, by and between DUBILIER CONDENSER CORPORATION, a corporation of the State of Delaware, having its principal office at New York City, New York, party of the first part, hereinafter also referred to as DUBILIER CORPORATION, and GRIGSBY-GRUNOW-HINDS COMPANY, an Illinois corporation having its principal office at Chicago, Illinois, party of the second part, hereinafter also referred to as GRIGSBY COMPANY;

WITNESSETH THAT:

WHEREAS, the Dubilier Corporation has the right to grant licenses under United States Letters Patent No. 1,606,212 of November 9, 1926, issued to Francis W. Dunmore and Percival D. Lowell, for Power Amplifier, and the Grigsby Company desires to secure a license to manufacture, use and sell apparatus under said patent;

NOW, THEREFORE, in consideration of the mutual covenants entered into between parties hereto, and the payments herein specified, it is agreed by and between the parties hereto as follows:

(1) The Dubilier Corporation hereby grants to the Grigsby Company, in accordance with the terms and conditions hereinafter stated, a non-exclusive, indivisible license to manufacture, use and sell, for all except wired radio purposes, as hereinafter more fully described, apparatus under United States Letters Patent to Lowell and Dunmore No. 1,606,212 of November 9, 1926, and under any other improvement applications or patents on the apparatus covered by said Lowell and Dunmore patent No. 1,606,212 owned or controlled by the Dubilier Corporation, or under which said corporation may have the right to grant a license.

It is specifically understood that this license shall not extend to Licensee any rights to manufacture or sell apparatus embodying the invention of the aforesaid Letters Patent for wired radio purposes; that is to say, Licensors specifically exclude from the grant herein any right to manufacture, sell or use the apparatus in which the circuits of electron tubes are supplied with power obtained from a power line circuit, such as the home lighting mains, where signals are conveyed directly to the electron tube circuit by carrier currents superimposed on line wire circuits by a transmitter connected to the line wire circuits for the purpose of impressing the carrier currents thereon, where such carrier currents are received by a device connected with the line which receives radio frequency current as a carrier wave over a line circuit, which system is commonly known as wired radio, wired wireless or carrier current line wire transmission. This exception does not apply to the linking of broadcasting stations by wire with a transmitting station where the energy is radiated and subsequently received by space radio receiving apparatus.

(2) The Grigsby Company shall pay to the Dubilier Corporation a royalty of seventy-five (75¢) cents on each complete unit of apparatus manufactured and sold by the Grigsby Company coming under said Lowell and Dunmore patent, or any other application, or patent under which the Grigsby Company may be licensed as specified in paragraph 1.

(3) Said Grigsby Company shall pay such royalties quarterly on the fifteenth (15th) day of the months of January, April, July and October of each year for the preceding three (3) calendar months, and shall submit a report with such payment showing the number of units manufactured and sold for the said period for which payment is being made.

(4) Said Grigsby Company shall pay a minimum annual royalty on not less than five thousand (5000) units per year, the first year to commence with January 1, 1928, and shall not be required to make a maximum payment of royalties of greater than Seventy-five Hundred ($7500.00) Dollars per each year, beginning with January 1, 1928; each quarterly payment to be on a minimum of not less than twelve hundred and fifty (1250) units for the quarter, provided however, that should the Grigsby Company manufacture and sell less than the minimum number during any quarter the excess royalty paid for that quarter over the number actually sold for that quarter shall be credited on the next quarter or any succeeding quarter of that yearly period.

(5) The Grigsby Company shall keep true and accurate records of all units manufactured and sold under this license agreement, and agrees to permit the Lubilier Corporation or its authorized representative to inspect such records at any reasonable time in order to verify the accuracy of any of the reports made by the Grigsby Company hereunder.

(6) Should the Grigsby Company fail to make a report and payment of royalty when due as provided herein, the Lubilier Corporation shall have the privilege of terminating this license to the Grigsby Company upon thirty (30) days' notice, provided however, that should the Grigsby Company make such report and payment before the expiration of the thirty days, then such notice shall be without force and effect and t is license continue as though no notice had been given.

(7) This agreement shall inure to the benefit of and be binding upon the successors and assigns of the parties respectively; it being expressly understood and agreed, however, that the license is indivisible and non-transferable by the Licensee except in connection with said Licensee's entire business and assets. All rights under this Agreement shall terminate upon insolvency or bankruptcy of

Licensee and the rights conveyed hereunder shall not pass as an asset of Licensee under conditions of insolvency.

(8) The Grigsby Company is hereby given the right to terminate the license herein granted by the Dubilier Corporation to the Grigsby Company at the end of any calendar yearly period, beginning with the year 1930, by giving not less than sixty (60) days' notice in writing to the Dubilier Corporation prior to the end of the year of termination.

(9) The Grigsby Company shall place appropriate patent marking on any device or apparatus manufactured and sold under the license herein granted.

(10) It is hereby stipulated and agreed that if the Grigsby Company requires any outside source of supply of "paper condensers" of the type used by the Grigsby Company in its B current Supply Units, the Dubilier Corporation shall have the preference in supplying such condensers to the Grigsby Company, provided the price and quality of the Dubilier condenser shall meet the corresponding price and quality of any other outside source.

In witness whereof the parties hereto have caused this instrument to be executed by their officers hereunto duly authorized and their corporate seals affixed hereto.

DUBILIER CONDENSER CORPORATION

Attest:

By FRED D. WILLIAMS
President.

W J. SMITH
Secretary

GRIGSBY-GRUNOW-HINDS COMPANY

By B. J. Grigsby
President.

Attest:

A. WINNAN
Secretary.

STATE OF NEW YORK)
) SS:
COUNTY OF BRONX)

On this 15th day of November, 1927, personally appeared before me F. D. WILLIAMS, to me known and known to me to be the President of the MUBILIER CONDENSER CORPORATION of New York City, and he duly acknowledged to me that he executed the foregoing instrument on behalf of the said corporation, and that he was fully authorized to do so.

WITNESS my hand and Notarial Seal.

IRMA E. REUNER
Notary Public.

Notary Public, Bronx Co. No.155
Cert.filed in N.Y. Co. No.843
Commission expires Mar. 30, 1929.

STATE OF ILLINOIS)
) SS:
COUNTY OF)

On this 18 day of Nove. 1927, personally appeared before me B. J. GRIGSBY, to me known and known to me to be the President of GRIGSBY-GRUNOW-HINDS COMPANY, of Chicago, Illinois, and he duly acknowledged to me that he executed the foregoing instrument on behalf of said corporation, and that he was fully authorized to do so.

WITNESS my hand and Notarial Seal.

REGINA A. GALLAGHER
Notary Public.

PLAINTIFFS' EXHIBIT NO. 102, Sheet 6, 510-511

Dubilier
Condenser Corporation

4377 Bronx Boulevard at 238 Street
New York

Dec. 8, 1927.

9

Mr. John B. Brady,
Ouray Bldg.,
Washington, D.C.

Dear Mr. Brady,

I have your letter of the 7th. Thanks for writing that you will keep Mr. Edwards posted with copies of all matters pertaining to these patents.

I hope you have good luck on the 12th, as undoubtedly you will.

Regarding my trip West: I got only as far as Chicago, and had to come back, on account of other matters, and will not know for the next few days whether I can go yet this month, or if it will have to be in January, but I anticipate going, just as soon as it can be arranged. I will keep you advised as any developments occur, and on my return from the Coast will give you full report.

Yours very truly,

Fred D. Williams

Fred D. Williams, President
DUBILIER CONDENSER CORPORATION.

FDW/B

PLAINTIFFS' EXHIBIT No. 102, Sheet 7. 512-513

Dubilier
Condenser Corporation

4377 Bronx Boulevard at 238 Street

New York

Dec. 8, 1927.

JOHN B BRADY
RECEIVED
DEC 9 1927
WASHINGTON D.C.

Mr. John B. Brady,
Ouray Bldg.,
Washington, D.C.

Dear Mr. Brady,

As I wrote you some time ago, I have been working with the Grigsby people on the Power Amplifier patent license, and the one we finally agreed upon is herewith attached. I believe you will agree with me this is establishing at least a starting point, and I feel very much gratified I have gotten two licenses with the Grigsby people on the three patents, and I know you feel the same way.

Don't forget that we are working for you boys all the time, and this is a case where they make their own condensers, so you see we have not profited at all in that respect.

Yours very truly,

Fred D. Williams

Fred D. Williams, President
DUBILIER CONDENSER CORPORATION.

FDW/G

514 - 515

Registered

PLAINTIFFS' EX. No. 105. (Letter from Plaintiffs to Defendants dated Aug. 5, 1933 notifying of infringement.)

August 5, 1933

Baltimore Gas Light Company
Baltimore
Maryland

Gentlemen:

Your attention is called to United States Letters Patent No. 1,455,141 granted May 15, 1923, No. 1,606,212 granted November 9, 1926 and No. 1,635,117 granted July 5, 1927.

We are advised that you are selling radio receiving apparatus infringing upon the claims of these patents, an example of such apparatus being the Stewart Warner alternating current operated radio receiving sets.

On behalf of the owners of the above patent rights we write to request you to discontinue the further sale of such apparatus and to make an account of the profits derived by you and the damages caused to the owners of the patent rights by reason of your infringement.

Very respectfully,

CVE:B

[illegible], POWER & POOL

Cy to Mr. John B. Brady

PLAINTIFFS' EXHIBIT NO. 105, Sheet 2. 516- 517

323538

Receipt for Registered Article No.

Registered at the Post Office Indicated in Postmark

Fee paid ..... cents Class ...

Return Receipt fee ..... Spl. Delivery

Delivery restricted to addressee

in person ..... or order

Accepting employee will place his initials in space indicating restricted delivery.

POSTMASTER, per ..... MAILING OFFICE

AUG 1933 REGISTERED

RETURN RECEIPT

Received from the Postmaster the Registered or Insured Article, the original number of which appears on the face of this Card.

Balt Gas

(Signature or name of addressee)

(Signature of addressee's agent)

Date of delivery 8/7 19

Form 3811

Post Office Department

OFFICIAL BUSINESS

REGISTERED ARTICLE

No. 37

INSURED PARCEL

No.

PENALTY FOR PRIVATE USE TO AVOID PAYMENT OF POSTAGE

POSTMARK

AND DATE OF DELIVERY

Return to Edwards, Briver & Cook

(NAME OF SENDER)

Street and Number, or Post Office Box, 63 Wall St

NEW YORK,

NEW YORK.

PLAINTIFFS' EXHIBIT No. 106. Sheet 1.
(Bureau of Standards publication, Oct. 1922, No. 450)

DEPARTMENT OF COMMERCE

SCIENTIFIC PAPERS
OF THE
BUREAU OF STANDARDS

S. W. STRATTON, DIRECTOR

No. 450
[Part of Vol. 18]

AN ELECTRON TUBE AMPLIFIER USING 60-CYCLE ALTERNATING CURRENT TO SUPPLY POWER FOR THE FILAMENTS AND PLATES

BY

P. D. LOWELL, Associate Physicist
Bureau of Standards

OCTOBER 2, 1922

PRICE, 5 CENTS
$1.25 PER VOLUME ON SUBSCRIPTION
Sold only by the Superintendent of Documents, Government Printing Office, Washington, D. C.

WASHINGTON
GOVERNMENT PRINTING OFFICE
1922

PLAINTIFFS' EXHIBIT No. 106, Sheet 2, 520 - 521

AN ELECTRON TUBE AMPLIFIER USING 60-CYCLE ALTERNATING CURRENT TO SUPPLY POWER FOR THE FILAMENTS AND PLATES.

By P. D. Lowell.

ABSTRACT.

Electron tube amplifiers now form an important part of practically all radio receiving sets except the most simple types. Storage cells, which have heretofore usually been required for operating amplifiers, require constant attention, are bulky and heavy, and have other serious disadvantages. The dry cells, which are often used as a source of plate voltage, have a comparatively short life and are expensive and inconvenient. It would be much more convenient to use an amplifier which could be supplied with power from 110-volt, 60-cycle mains for both filaments and plates.

This paper describes a five-stage amplifier, which operates satisfactorily on 60-cycle supply, for both filaments and plates. This amplifier has three radio-frequency stages and two audio-frequency stages, and uses a crystal detector. A special transformer with five windings is used, the primary being supplied with 110 volts alternating current. The 60-cycle current, when used in an ordinary amplifier circuit, introduces a strong 60-cycle note which offers serious interference. This has been practically eliminated by balancing resistances, grid condensers, and special grid leaks of comparatively low resistance, telephone transformer in the output circuit, and crystal detector instead of electron tube detector. In the final form of the amplifier there is only a slight residual hum, which is not objectionable. The amplification obtained with alternating-current supply was as good as that obtained with the same amplifier used with direct-current supply. The complete unit is light, compact, and portable. For the reception of damped waves, the amplifier as constructed operated most satisfactorily for wave lengths from 200 to 750 meters. This range was determined by the working range of the radio-frequency transformers used. By using suitable radio-frequency transformers, it is expected that the amplifier will be effective for the reception of damped waves and undamped waves as long as 10 000 meters. For the reception of undamped waves, a separate heterodyne should be employed. The paper gives circuit diagrams, and states the values of the condensers, resistors, and inductors used. The paper also describes a method for rectifying the 110-volt alternating-current supply and using it for the field of a loud speaker.

Electron tube amplifiers form an important part of practically all radio receiving sets now, except the most simple types. Such amplifiers are, in fact, necessary to receive distant stations, or when using coil antennas. For good operation, amplifier tubes require for the filament a source of voltage of very constant value (usually about 6 volts), and for the plate a source of voltage of from 40 to perhaps 300 volts. The filament voltage is usually supplied by storage cells and the plate voltage by dry cells. The

ce of these cells in operating condition, especially the lla, is often a source of much difficulty and annoyance. e cells are necessarily bulky and heavy, require constant to maintain proper charge and density of electrolyte, jurious acid or other fumes, and are subject to varia- tage during the period of discharge. The development ifier which can be supplied from the ordinary 110-volt current lighting mains is of considerable practical , since it would eliminate the practical difficulties of storage cells. The amplifier using such alternating- ply has the important advantages of reliability, con- d cheapness both in first cost and operating cost.

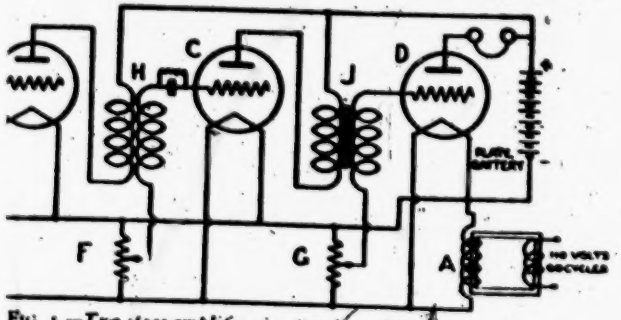

FIG. 1.—*Two stage amplifier circuit using tube detector.*

rnating-current supply the expense of the storage its charging equipment and the expense of the dry he plate are eliminated. The first cost of the ampli- rnating-current supply is somewhat less than the first ordinary amplifier, including its necessary batteries equipment. One of the most important items in the cost of the ordinary amplifier is the dry cells for the , since in service these dry cells must be renewed three to six months. It is estimated that during a years the saving in the cost of "B" dry batteries will a complete amplifier with alternating-current supply. r with alternating-current supply, using five stages n, has been developed at the Bureau of Standards. e stages of radio-frequency amplification and two io frequency amplification. This paper describes briefly.

rangement tried consisted of one radio-frequency ification, tube detector, and one audio-frequency

stage. The filaments of the three tubes were lighted by 6 volts supplied by a step-down transformer, the primary of which was connected to the 110-volt, 60-cycle power mains. The circuit is shown in Figure 1.

In Figure 1, the filament lighting transformer is shown at *A*, supplying voltage for the filaments of electron tubes *B*, *C*, and *D*. The amplifier input circuit is connected to the grid of tube *B* and to the slider of the balancing resistance *E*, the latter having a resistance of 200 ohms and being connected across the filament line. A radio-frequency transformer is shown at *H*, a balancing resistance at *F*, an audio-frequency transformer at *J*, and another balancing resistance at *G*. The purpose of the balancing resistances *E*, *F*, *G*, is to keep the normal voltage of the grids at a steady value with respect to the average voltage of the

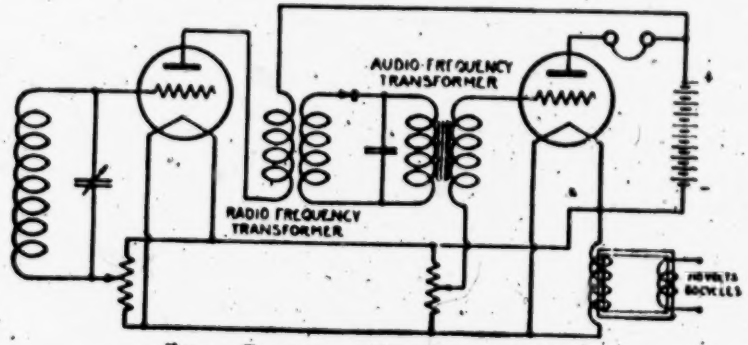

FIG. 2.—*Two-stage amplifier using crystal detector.*

electrical midpoint of the filament, and to thus eliminate the hum which variations of the grid voltage would cause. These balancing resistances are adjusted until the hum is eliminated. Reception was accomplished with this circuit, but there was considerable 60-cycle hum present in spite of the beneficial effect of the balancing resistances.

The employment of a crystal detector in place of the electron tube detector reduced the 60-cycle hum very considerably. This circuit is shown in Figure 2.

When an electron tube is used as the detector, there is impressed on both the plate and the filament a 60-cycle alternating-current voltage which, although small, becomes very objectionable when amplified by one or two stages of audio-frequency amplification. When the crystal detector is used, no 60-cycle voltage is supplied

PLAINTIFF'S EXHIBIT No. 106, Sheet 3,
522-523
762

maintenance of these cells in operating condition, especially the storage cells, is often a source of much difficulty and annoyance. The storage cells are necessarily bulky and heavy, require constant attention to maintain proper charge and density of electrolyte, give off injurious acid or other fumes, and are subject to variations of voltage during the period of discharge. The development of an amplifier which can be supplied from the ordinary 110-volt alternating-current lighting mains is of considerable practical importance, since it would eliminate the practical difficulties of maintaining storage cells. The amplifier using such alternating-current supply has the important advantages of reliability, convenience, and cheapness both in first cost and operating cost.

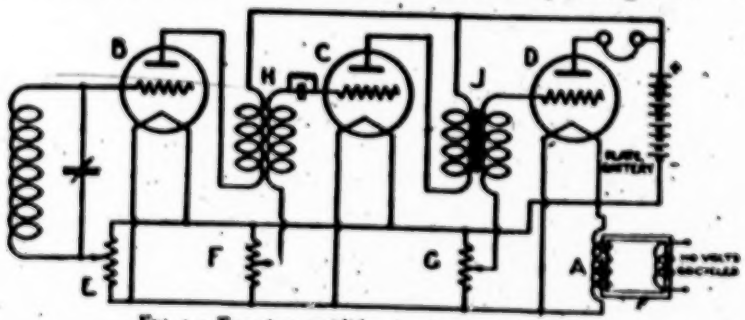

FIG. 1.—*Two stage amplifier circuit using tube detector.*

With alternating-current supply the expense of the storage battery and its charging equipment and the expense of the dry battery for the plate are eliminated. The first cost of the amplifier with alternating-current supply is somewhat less than the first cost of the ordinary amplifier, including its necessary batteries and charging equipment. One of the most important items in the maintenance cost of the ordinary amplifier is the dry cells for the "B" battery, since in service these dry cells must be renewed about every three to six months. It is estimated that during a period of five years the saving in the cost of "B" dry batteries will alone pay for a complete amplifier with alternating-current supply.

An amplifier with alternating-current supply, using five stages of amplification, has been developed at the Bureau of Standards. There are three stages of radio-frequency amplification and two stages of audio frequency amplification. This paper describes this amplifier briefly.

The first arrangement tried consisted of one radio-frequency stage of amplification, tube detector, and one audio-frequency

stage. The filaments of the three tubes were lighted by 6 volt supplied by a step-down transformer, the primary of which connected to the 110-volt, 60-cycle power mains. The circuit shown in Figure 1.

In Figure 1, the filament lighting transformer is shown at supplying voltage for the filaments of electron tubes *B*, *C*, and The amplifier input circuit is connected to the grid of tube *B* a to the slider of the balancing resistance *E*, the latter having resistance of 200 ohms and being connected across the filame line. A radio-frequency transformer is shown at *H*, a balanci resistance at *F*, an audio-frequency transformer at *J*, a another balancing resistance at *G*. The purpose of the balanci resistances *E*, *F*, *G*, is to keep the normal voltage of the gri at a steady value with respect to the average voltage of t

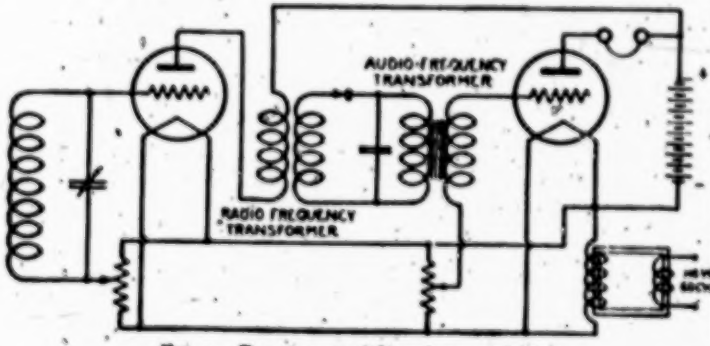

FIG. 2.—*Two-stage amplifier using crystal detector.*

electrical midpoint of the filament, and to thus eliminate the hu which variations of the grid voltage would cause. These balan ing resistances are adjusted until the hum is eliminated. Rece tion was accomplished with this circuit, but there was considera ble 60-cycle hum present in spite of the beneficial effect of t balancing resistances.

The employment of a crystal detector in place of the electr tube detector reduced the 60-cycle hum very considerably. T circuit is shown in Figure 2.

When an electron tube is used as the detector, there is impress on both the plate and the filament a 60-cycle alternating curre voltage which, although small, becomes very objectionable wh amplified by one or two stages of audio-frequency amplificati When the crystal detector is used, no 60-cycle voltage is suppli

ector circuit. The radio-frequency transformer, whose delivered to the detector circuit, prevents the passage preciable amount of 60-cycle current supplied to the ency stage, and such voltages are not present in the ector circuit and do not reach the input of the audio- stage.

loyment of a crystal detector may at first seem objec- ue to the fact that as ordinarily used it is rather difficult oint of good sensitivity. But tests on this amplifier at careful adjustment of the crystal detector was not because of the fact that the radio-frequency amplifi- eding the detector usually gave sufficient signal strength oint of sufficient sensitivity could be easily found.

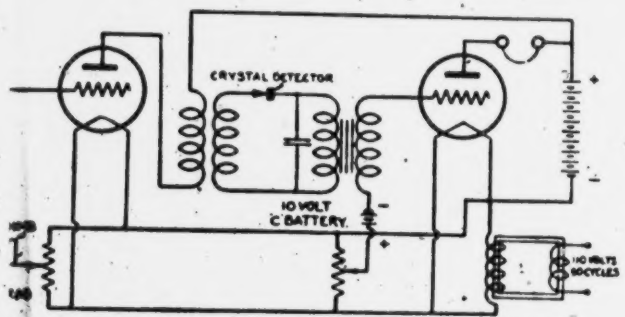

...ge amplifier using crystal detector, with grid condenser for radio stages and grid battery for audio stages.

ult gave quite good results. The 60-cycle hum was eliminated and the crystal detector gave almost as ation as the tube detector.

und that better amplifying action could be obtained g condensers of about 0.02 microfarad capacity, two megohm grid-leak resistances, in the grid circuits, h the sliders of the balancing resistances. The grid nd grid-leak resistances allow the grids to assume a ge which is more favorable for amplifying purposes. stances allow any accumulated charge on the grids the filaments. Still better amplification and quieter is produced by replacing the series grid condenser and udio stage with a 10-volt battery giving a negative grid. A battery of dry cells was used for this pur- ly an extremely small current is required, the life

of the dry cells is practically their shelf life. This gave a circuit as shown in Figure 3.

Alternating current rectified by means of a gas-filled two-element rectifier tube ("Tungar" tube) was tried as a source of filament power, but the residual hum was much greater than when unrectified alternating current was used. This is because of the fact that during rectification the wave form becomes distorted and it becomes impossible to stabilize the grid voltage by means of the balancing resistances.

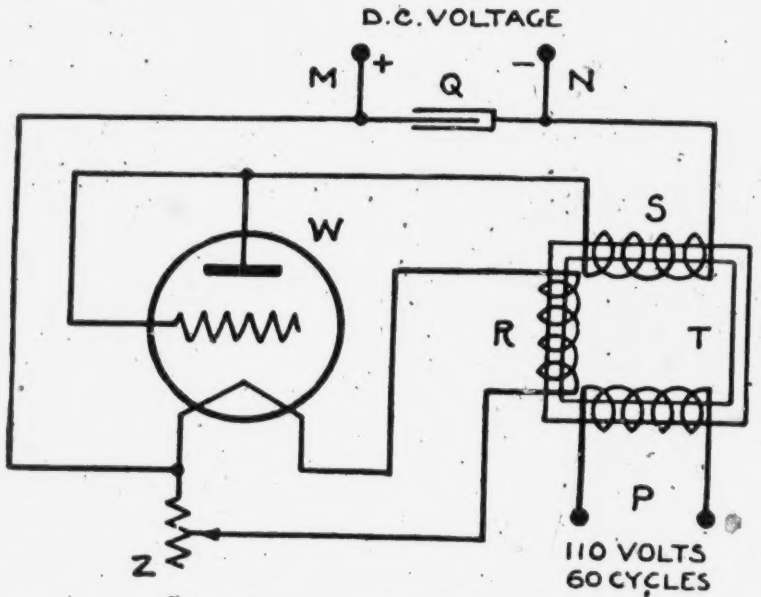

FIG. 4.—*Rectification circuit for plate voltage supply.*

In the above-mentioned tests, a plate battery was used for convenience, but this was replaced by alternating current which had been rectified by means of an electron tube and smoothed out with condensers of large capacity. The rectification circuit for the plate voltage supply is shown in Figure 4.

In Figure 4, the primary P of the transformer T is connected to the power mains, and the winding R gives 8 volts for the filament of the rectifier tube W. Winding S gives 300 volts which is rectified by the tube W and smoothed out by the condenser Q which has about 10 microfarads capacity. This gives at terminals M and N a high-voltage direct current which is quite suitable for

PLAINTIFFS' EXHIBIT NO. 106, Sheet 4,
524 - 525
763

to the detector circuit. The radio-frequency transformer, whose output is delivered to the detector circuit, prevents the passage in any appreciable amount of 60-cycle current supplied to the radio-frequency stage, and such voltages are not present in the crystal detector circuit and do not reach the input of the audio-frequency stage.

The employment of a crystal detector may at first seem objectionable, due to the fact that as ordinarily used it is rather difficult to find a point of good sensitivity. But tests on this amplifier showed that careful adjustment of the crystal detector was not necessary because of the fact that the radio-frequency amplification preceding the detector usually gave sufficient signal strength so that a point of sufficient sensitivity could be easily found.

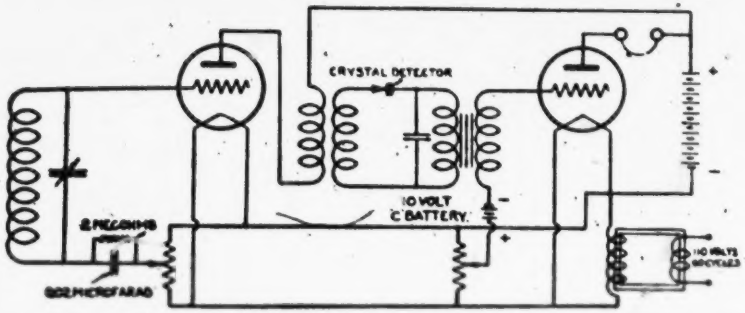

FIG. 3.—*Two-stage amplifier using crystal detector, with grid condenser for radio stage and grid battery for audio stages.*

This circuit gave quite good results. The 60-cycle hum was practically eliminated and the crystal detector gave almost as good rectification as the tube detector.

It was found that better amplifying action could be obtained by inserting condensers of about 0.02 microfarad capacity, shunted by two megohm grid-leak resistances, in the grid circuits, in series with the sliders of the balancing resistances. The grid condensers and grid-leak resistances allow the grids to assume a normal voltage which is more favorable for amplifying purposes. The leak resistances allow any accumulated charge on the grids to leak off to the filaments. Still better amplification and quieter operation was produced by replacing the series grid condenser and leak in the audio stage with a 10-volt battery giving a negative charge to the grid. A battery of dry cells was used for this purpose; since only an extremely small current is required, the life

of the dry cells is practically their shelf life. This gave a circuit shown in Figure 3.

Alternating current rectified by means of a gas-filled two-element rectifier tube ("Tungar" tube) was tried as a source of filament power, but the residual hum was much greater than when unrectified alternating current was used. This is because of the fact that during rectification the wave form becomes distorted and it becomes impossible to stabilize the grid voltage by means of the balancing resistances.

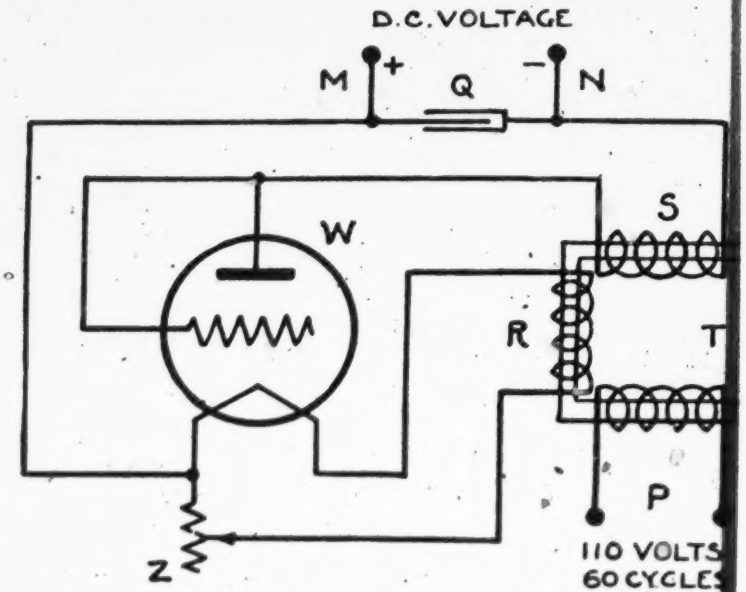

FIG. 4.—*Rectification circuit for plate voltage supply.*

In the above-mentioned tests, a plate battery was used for convenience, but this was replaced by alternating current which had been rectified by means of an electron tube and smoothed out by condensers of large capacity. The rectification circuit for the plate voltage supply is shown in Figure 4.

In Figure 4, the primary *P* of the transformer *T* is connected to the power mains, and the winding *R* gives 8 volts for the filament of the rectifier tube *W*. Winding *S* gives 300 volts which is rectified by the tube *W* and smoothed out by the condenser *Z* which has about 10 microfarads capacity. This gives at terminals *M* and *N* a high-voltage direct current which is quite suitable

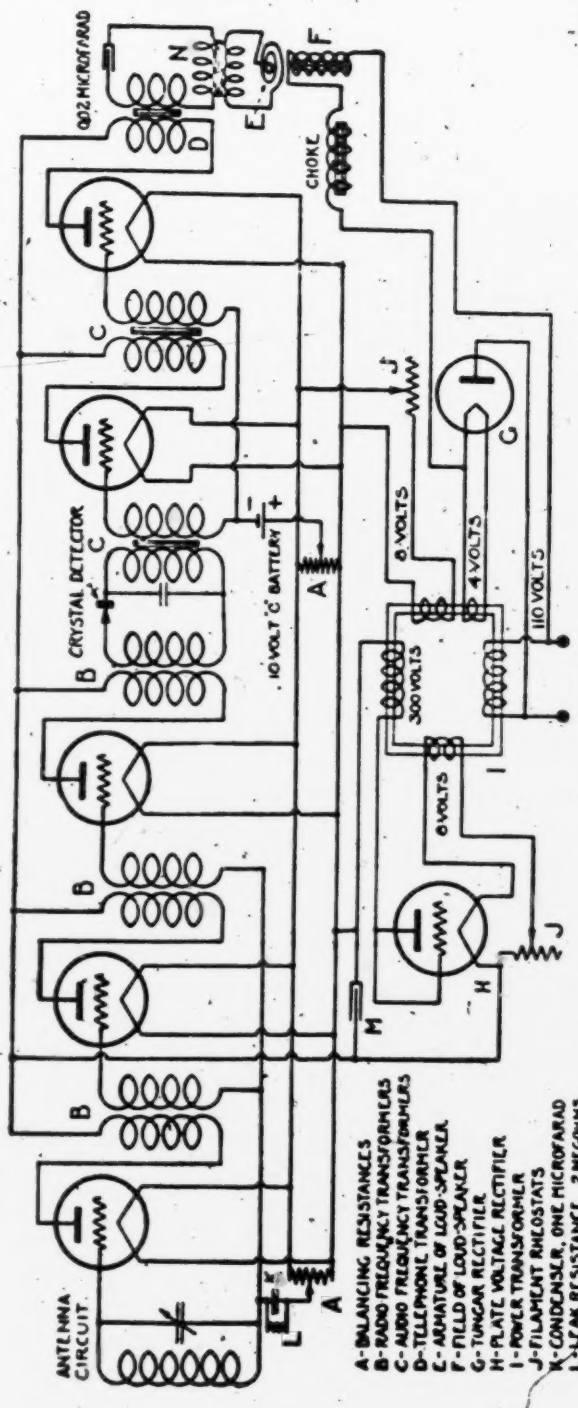

FIG. 5.—*Final complete circuit of five-stage amplifier, using crystal detector and two-cycle alternating current to supply power for the filaments and plates.*

PLAINTIFFS' EXHIBIT NO. 106, Sheet 6,

FIG. 6.—*Complete assembled amplifier unit and rectifier unit, showing connection for 60-cycle a-c supply.*

530 - 531

PLAINTIFFS' EXHIBIT NO. 106, Sheet 7,

use on the plates of the amplifier tube. Rheostat Z varies the brilliancy of the filament of the rectifier tube and, simultaneously, the voltage for the plates.

The use of a loud-speaking telephone receiver, such as the "Magnavox," was made possible by applying to the field coil of the loud speaker an alternating current rectified by a "Tungar" rectifier tube. The impedance of the field coil was sufficient to smooth out the pulsating current to such an extent that the hum was not annoying. It was also advantageous to couple the loud-speaking reproducer circuit to the plate circuit of the last amplifier tube by means of a one-to-one ratio telephone transformer with a 0.02 microfarad condenser in series with the telephone circuit. This helped considerably to reduce the residual hum in the telephone.

The final circuit is shown in Figure 5, and includes three stages of radio-frequency amplification, galena crystal detector, two stages of audio-frequency amplification, loud-speaking reproducer, and the necessary power transformer and rectification circuits.

This final circuit gives good amplification, with a slight residual hum, which is not great enough to be objectionable when receiving signals of ordinary readable strength. The residual hum is, of course, more objectionable when extremely weak signals are being received. Radiotelephone music and conversation are clearly reproduced.

The amplifier was operated under normal conditions, using the usual sources of direct-current supply, and then switched over to alternating-current supply. This comparative test showed the alternating-current supply to give as good amplification as the direct-current supply, although the set was slightly more sensitive to weak signals when batteries were used, on account of the interference caused by the hum when used on alternating-current.

For the reception of damped waves, the amplifier as constructed operated most satisfactorily for frequencies from 400 kilocycles to 1500 kilocycles per second (750 to 200 meters). This frequency range was determined by the working range of the radio-frequency transformers used. By using suitable radio-frequency transformers, it is expected that the amplifier will be effective for the reception of damped waves for frequencies as low as 30 kilocycles (10 000 meters). This amplifier has also been found effective for the reception of undamped waves, when used with a separate heterodyne.

PLAINTIFFS' EXHIBIT NO. 106, Sheet 8, 532-533

The special transformer with five windings and the rectifier tube were assembled in one box, and the amplifier tubes and amplifier transformers and other apparatus were assembled in a separate box. This was done to avoid having the amplifier immediately adjacent to the special transformer, from which it would pick up considerable 60-cycle hum. The assembled rectifier unit measured about 8 by 8 by 9 inches and weighed about 21 pounds. The assembled amplifier unit measured about 8 by 11 by 14 inches and weighed about 21 pounds.

Figure 6 shows the rectifier unit and the amplifier unit as completed, with the plug to connect with the 60-cycle lighting current. A 6-inch rule is shown leaning against the rectifier unit.

F. W. Dunmore was a coworker and participated in the development of this instrument.

WASHINGTON, June 17, 1922.

PLAINTIFFS' EXHIBIT NO. 107,

(Copy of spring analogue diagram drawn on blackboard by witness Lowell).

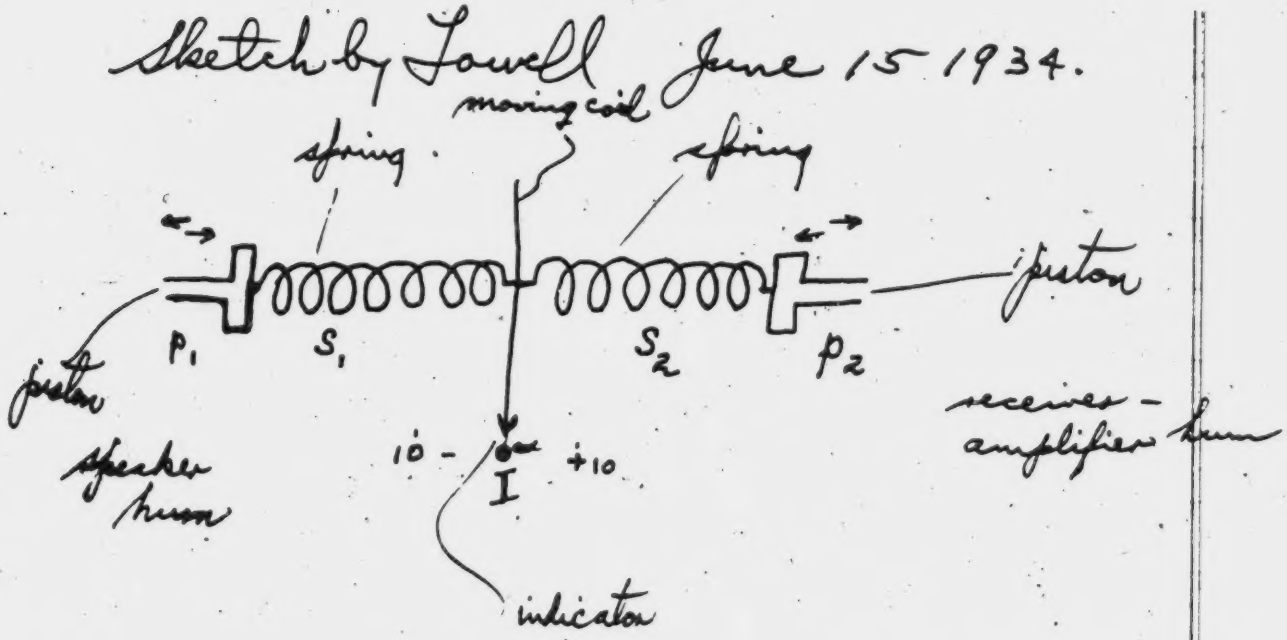

Plaintiff's 107

STEWART – WARNER MODEL 109 – ARRANGED FOR TEST AT OUTPUT OF MAIN FILTER

PLAINTIFFS' EXHIBIT No. 109,

(Wiring diagram of connection for test of hum in filter output).

This Exhibit also offered as Plaintiffs' Ex. No. 79.

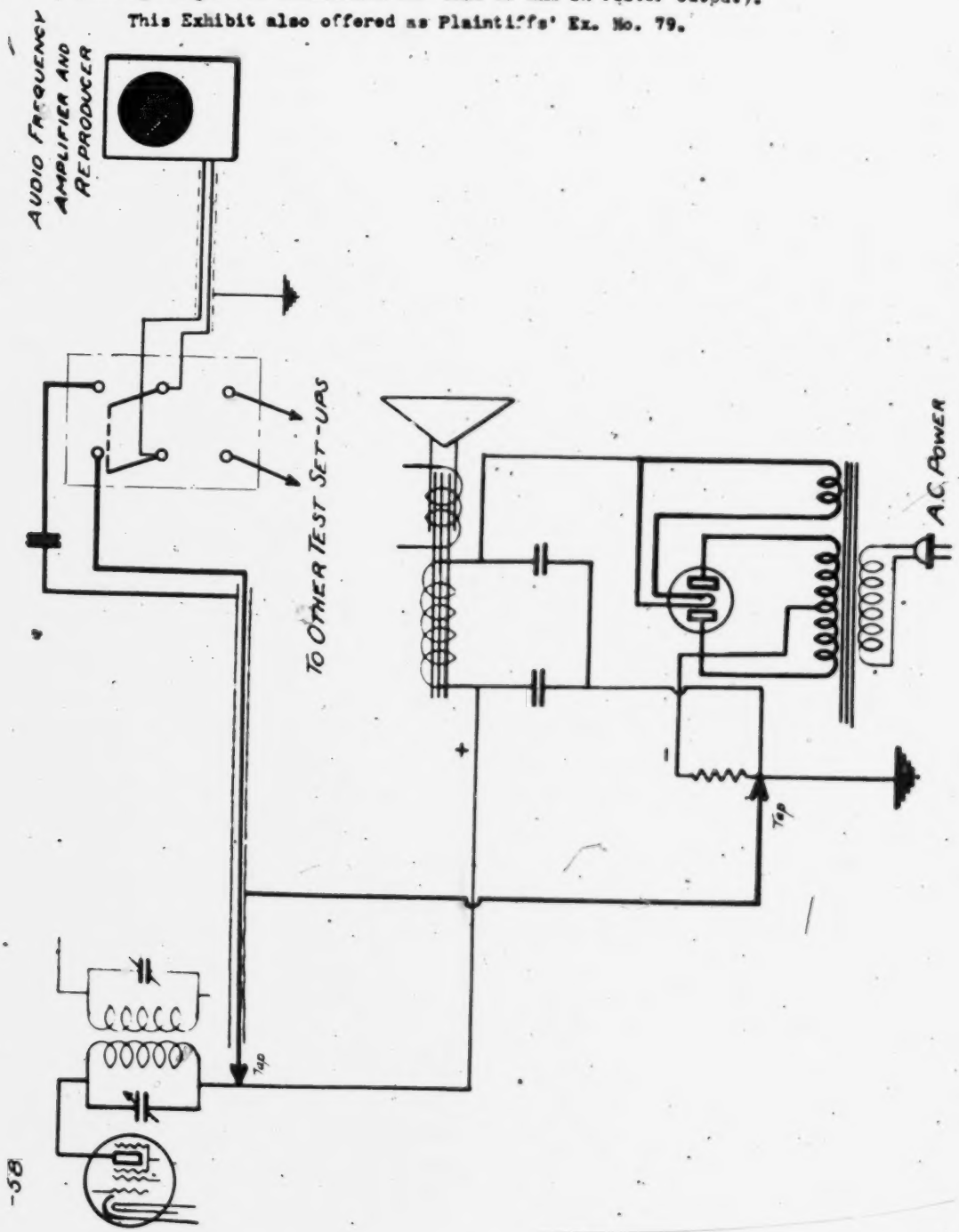

DEFENDANTS' EXHIBIT "A",
(Wiring diagram of RCA loudspeaker 104).

SCHEMATIC DIAGRAM
LOUD SPEAKER MODEL 104

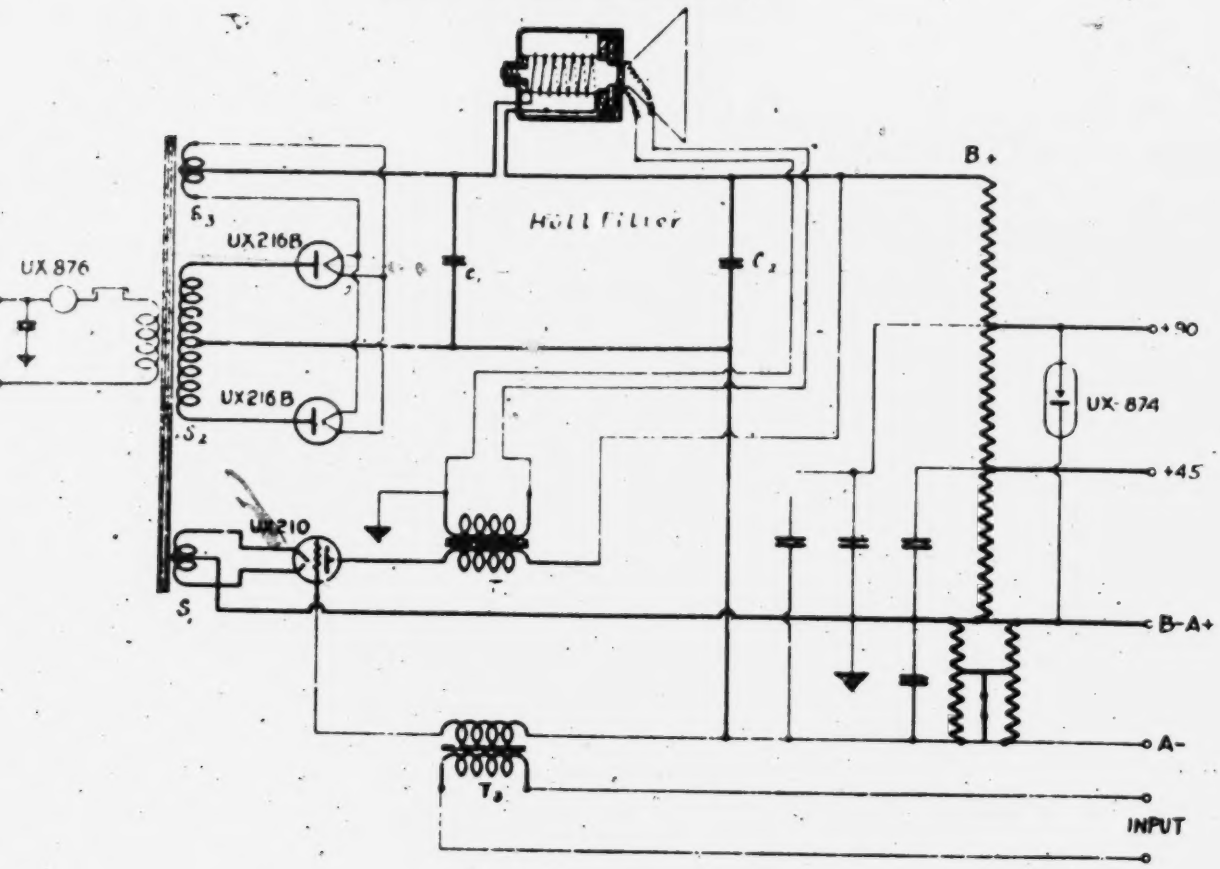

DEFENDANTS' EXHIBIT "B"

(Patent 1,282,439 to Langmuir)

I. LANGMUIR.

SYSTEM FOR AMPLIFYING VARIABLE CURRENTS.

APPLICATION FILED OCT. 29, 1913.

771 **1,282,439.** Patented Oct. 22, 1918.

Fig. 1.

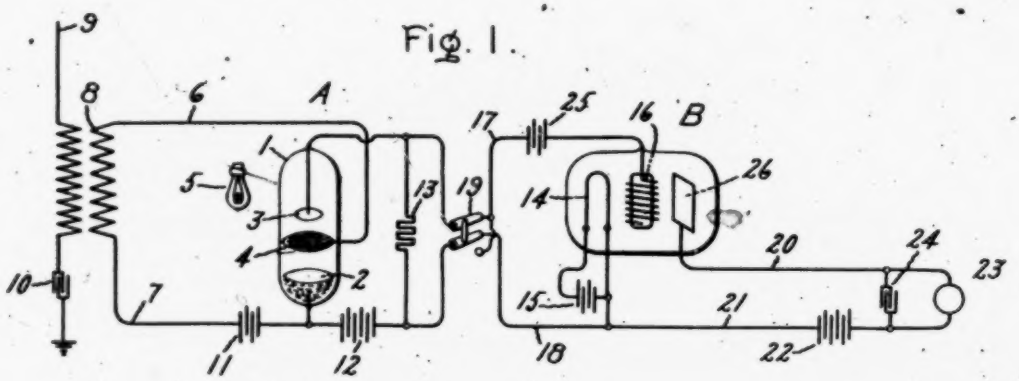

Fig. 2.

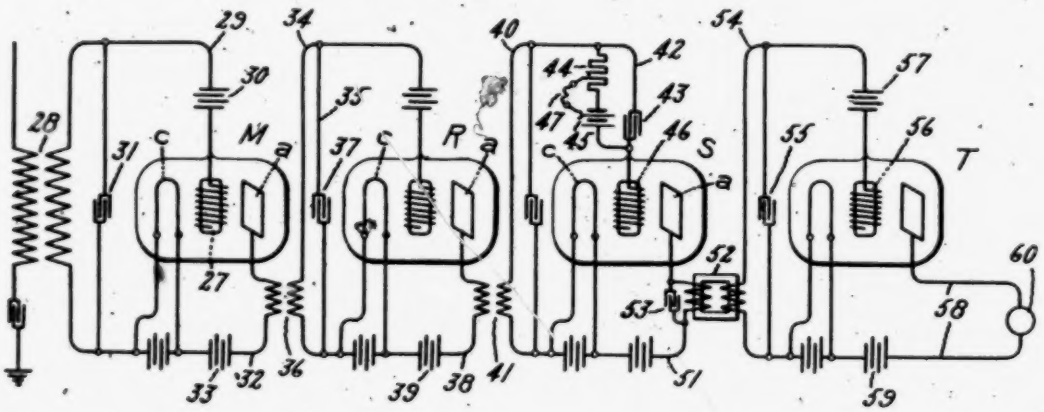

Fig. 3.

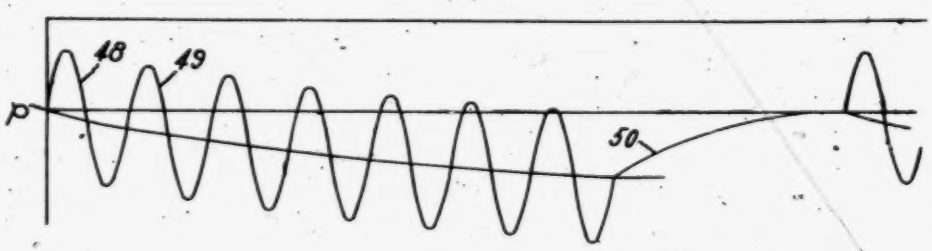

WITNESSES:
J. Earl Ryan
J. Ellis Glen

INVENTOR:
IRVING LANGMUIR,
BY Albert G. Davis
HIS ATTORNEY.

UNITED STATES PATENT OFFICE. 772

IRVING LANGMUIR, OF SCHENECTADY, NEW YORK, ASSIGNOR TO GENERAL ELECTRIC COMPANY, A CORPORATION OF NEW YORK.

SYSTEM FOR AMPLIFYING VARIABLE CURRENTS.

1,282,439. Specification of Letters Patent. Patented Oct. 22, 1918.

Application filed October 29, 1913. Serial No. 797,985.

To all whom it may concern:

Be it known that I, IRVING LANGMUIR, a citizen of the United States, residing at Schenectady, county of Schenectady, State of New York, have invented certain new and useful Improvements in Systems for Amplifying Variable Currents, of which the following is a specification.

The present invention relates to electrical discharge apparatus utilizing an electron discharge and comprises novel systems of connection whereby weak variable currents may be reproduced as stronger currents. My invention also includes means for securing selectivity in detecting signals, for example, for receiving systems in radio-telegraphy.

The electron-discharge device preferably utilized in accordance with my invention comprises an incandescent, or other electron-emitting cathode, a coöperating gas-free anode and a discharge-controlling conductor, commonly called the grid, and an inclosing envelop, the space in the envelop being evacuated below the pressure at which appreciable gas ionization by collision with electrons can occur, as described and claimed in my prior application, Serial No. 795,610 filed Oct. 16, 1913, but it is to be understood that my invention is not limited to this particular apparatus.

My invention includes a combination of two or more electron discharge devices connected in cascade, the electrode circuit of one device being connected to a resistance, a reactance or transformer across which is connected the grid circuit of a second device. My invention also includes other novel features, such as means for integrating high frequency wave trains into impulses or waves of lower frequency, tuning both for group frequency as well as wave frequency, and other features pointed out with greater particularity in the appended claims.

A more detailed understanding of my invention may be had from the following description taken in connection with the accompanying drawings, which show for the purpose of illustration my invention as applied to receiving systems of wireless telegraphy. Figure 1 illustrates a system containing a device having an illuminated cathode; Fig. 2 illustrates a tuned system containing a condenser for integrating oscillations, and Fig. 3 is a diagram illustrating an integrating effect secured with a condenser with the grid circuit.

In Fig. 1 an electron discharge device A comprises a gas-tight envelop 1 which may consist of quartz or glass, preferably material pervious to ultra-violet light, and into which are sealed in the usual manner an electron emitting cathode 2, a coöperating anode 3 and a discharge-controlling grid 4 ordinarily located between the cathode and anode. The cathode in this case consists of potassium, sodium, or other metal which emits electrons when illuminated by means of a source of light 5, which may be an incandescent lamp as illustrated or a suitable arc lamp. A monochromatic source of light, such as mercury vapor arc in a quartz or glass envelop is advantageous in giving electrons of uniform velocity. The anode preferably consists of tungsten and is deprived of gas by electron bombardment during the exhausting process, the envelop being sealed when the anode has been thoroughly freed from gas and the pressure in the envelop has been reduced to a value at which no appreciable gas ionization can occur. The grid 4 and the cathode 2 are connected respectively by conductors 6 and 7 to the secondary of a transformer 8, the primary of which is located in circuit with an antenna 9. In the antenna circuit there may be located a grounded condenser 10 but the antenna connections and structure may be the usual ones forming no part of my present invention. In the grid circuit 7, there is preferably included a source of potential 11, such as a battery which preferably is connected to maintain the grid at a definite negative potential, but in some cases the grid may be maintained at a positive potential.

In the circuit connecting the cathode and the anode, also known as the "plate circuit," is included a local source of energy, such as a battery 12, having its negative terminal connected to the cathode, and also a resistance 13. In place of this resistance a sufficiently high inductance may be used, its value depending on the frequency. The grid consists of a frame-work upon which is wound preferably very fine wire, for example, wire having a diameter of about .0004 inch, the turns being closely spaced. To the terminals of the resistance is connected a second electron-discharge device B, having

a cathode 14, adapted to be heated to incandescence by means of a battery 15, or other convenient source. The grid 16 and the cathode 14 are connected to the resistance 13 respectively by conductors 17 and 18, through a reversing switch 19. In the electrode circuit 20, 21, of the device B is included a local source of energy 22 and an electrical detecting device 23, such as any of the known forms of electromagnetic recorders or a telephone. In shunt therewith may be placed a condenser 24. In some cases a battery 25 or other source of potential may be included in the grid circuit 17. This method of connecting two amplifiers in cascade is claimed in my application, Serial No. 11,512, filed March 2, 1915, which is a division of this application.

In the system described the discharge device A, which may have relatively large distances between the grid and the electrodes, is made very sensitive to changes of grid voltages. The fact that the electrons are emitted by the cathode at uniform velocity contributes to its sensitiveness. A comparatively feeble impulse received from the antenna 8 will be accompanied by a change in the current from the local source 12 through the resistance 13. The current increases when a positive wave is superimposed on the negative grid potential. The current flowing through the resistance 13 will be greater than the current received from the antenna, and therefore, will produce greater variations in the static charge of the grid 16 of the device B than were originally received by the grid 4 of the device A. Hence, these potentials may be used to produce greatly amplified signal current. In other words, the stronger currents flowing in the electrode circuit of the device A can be used to vary the flow of electron discharge current between the cathode 14 and the anode 26 of the discharge device B which is adapted to control relatively a greater amount of energy than the device A although not necessarily so sensitive to minute voltage changes as the device A. This feature of my invention is claimed in my application Serial No. 254,334, filed Sept. 16, 1918, which is a division of this application. When the switch 19 is set so as to connect the positive terminal of the resistance 13 to the grid circuit 17, containing means for making the grid 16 negative, an increase of plate current of device A will produce an increase in the plate current of device B. The converse is the case when the connections are reversed. The variations in the electrode or plate circuit constitutes further amplification of the original signal currents and may be made great enough to operate an electromagnetic instrument 23, such as a telegraph relay, or in any convenient way as to indicate the signals. In some cases an ordinary telephone may be connected to the terminals of the conductors 20, 21, to detect the amplified signals.

The system shown in Fig. 2 is in some respects similar to the system shown in Fig. 1, for example, in the character of the discharge device used, and therefore need not be again described in detail. Each device has a heated cathode *c* and an unheated anode *a*, both of which may consist of tungsten. In the system shown in Fig. 2 a number of discharge devices have been shown connected in cascade and one of the devices is provided with means for integrating the high frequency oscillations of the wave trains so as to transmit in its plate circuit variable current which when transformed to an alternating current will correspond in frequency with the group frequency of the wave trains. Such a system permits progressive tuning in each grid circuit whereby the receiving system will select only signals having both a predetermined oscillation frequency and group frequency. This method of operation will be better understood by first considering the connections and then tracing through the method of operation.

The grid 27 of the discharge tube M is connected to the secondary of the loosely coupled air core transformer 28. The primary of the transformer is included in a grounded antenna circuit similar to that shown in Fig. 1. In the grid circuit 29 is included a source of potential 30 and across the transformer secondary is connected a condenser 31, which preferably is made adjustable. By properly proportioning the inductance of the transformer secondary and the capacity of the condenser, the oscillating circuit constituted thereby may be made resonant to a desired frequency and therefore will be largely opaque to disturbances. Hence the grid will be influenced only to a slight extent by frequencies differing from the desired predetermined frequency. As already explained the variations in the grid potential, which is preferably negative, produced by the impressed oscillations result in oscillations in the plate circuit 32 similar to those in the grid circuit. These oscillations having been produced by a local source of current 33 may be stronger than the received oscillations. They are impressed on another oscillating circuit 34, 35, by means of an air core transformer 36. The circuit 34, 35, is likewise adjusted to be opaque to undesired oscillations by properly adjusting the condenser 37. The oscillations produced in the plate circuit 38 of the device R by a local source of energy 39 are again transmitted to another local oscillating circuit 40 which is also tuned, by an air core transformer 41. It will be noted that by thus tuning successive circuits the undesired oscillations are reduced in each case in geometric proportion. This progres-

a cathode 14, adapted to be heated to incandescence by means of a battery 15, or other convenient source. The grid 16 and the cathode 14 are connected to the resistance 13 respectively by conductors 17 and 18, through a reversing switch 19. In the electrode circuit 20, 21, of the device B is included a local source of energy 22 and an electrical detecting device 23, such as any of the known forms of electromagnetic recorders or a telephone. In shunt therewith may be placed a condenser 24. In some cases a battery 25 or other source of potential may be included in the grid circuit 17. This method of connecting two amplifiers in cascade is claimed in my application, Serial No. 11,512, filed March 2, 1915, which is a division of this application.

In the system described the discharge device A, which may have relatively large distances between the grid and the electrodes, is made very sensitive to changes of grid voltages. The fact that the electrons are emitted by the cathode at uniform velocity contributes to its sensitiveness. A comparatively feeble impulse received from the antenna 8 will be accompanied by a change in the current from the local source 12 through the resistance 13. The current increases when a positive wave is superimposed on the negative grid potential. The current flowing through the resistance 13 will be greater than the current received from the antenna, and therefore, will produce greater variations in the static charge of the grid 16 of the device B than were originally received by the grid 4 of the device A. Hence, these potentials may be used to produce greatly amplified signal current. In other words, the stronger currents flowing in the electrode circuit of the device A can be used to vary the flow of electron discharge current between the cathode 14 and the anode 26 of the discharge device B which is adapted to control relatively a greater amount of energy than the device A although not necessarily so sensitive to minute voltage changes as the device A. This feature of my invention is claimed in my application Serial No. 254,334, filed Sept. 16, 1918, which is a division of this application. When the switch 19 is set so as to connect the positive terminal of the resistance 13 to the grid circuit 17, containing means for making the grid 16 negative, an increase of plate current of device A will produce an increase in the plate current of device B. The converse is the case when the connections are reversed. The variations in the electrode or plate circuit constitutes further amplification of the original signal currents and may be made great enough to operate an electromagnetic instrument 23, such as a telegraph relay, or in any convenient way to indicate the signals. In some cases an ordinary telephone may be connected to the terminals of the conductors 20, 21, to detect the amplified signals.

The system shown in Fig. 2 is in some respects similar to the system shown in Fig. 1, for example, in the character of the discharge device used, and therefore need not be again described in detail. Each device has a heated cathode *c* and an unheated anode *a*, both of which may consist of tungsten. In the system shown in Fig. 2 a number of discharge devices have been shown connected in cascade and one of the devices is provided with means for integrating the high frequency oscillations of the wave trains so as to transmit in its plate circuit variable current which when transformed to an alternating current will correspond in frequency with the group frequency of the wave trains. Such a system permits progressive tuning in each grid circuit whereby the receiving system will select only signals having both a predetermined oscillation frequency and group frequency. This method of operation will be better understood by first considering the connections and then tracing through the method of operation.

The grid 27 of the discharge tube M is connected to the secondary of the loosely coupled air core transformer 28. The primary of the transformer is included in a grounded antenna circuit similar to that shown in Fig. 1. In the grid circuit 29 is included a source of potential 30 and across the transformer secondary is connected a condenser 31, which preferably is made adjustable. By properly proportioning the inductance of the transformer secondary and the capacity of the condenser, the oscillating circuit constituted thereby may be made resonant to a desired frequency and therefore will be largely opaque to disturbances. Hence the grid will be influenced only to a slight extent by frequencies differing from the desired predetermined frequency. As already explained the variations in the grid potential, which is preferably negative, produced by the impressed oscillations result in oscillations in the plate circuit 32 similar to those in the grid circuit. These oscillations having been produced by a local source of current 33 may be stronger than the received oscillations. They are impressed on another oscillating circuit 34, 35, by means of an air core transformer 36. The circuit 34, 35, is likewise adjusted to be opaque to undesired oscillations by properly adjusting the condenser 37. The oscillations produced in the plate circuit 38 of the device R by a local source of energy 39 are again transmitted to another local oscillating circuit 40 which is also tuned, by an air core transformer 41. It will be noted that by thus tuning successive circuits the undesired oscillations are reduced in each case in geometric proportion. This progres-

sive tuning thus produced in my present invention is described and claimed in its broad aspect in a patent of Ernst F. W. Alexanderson, No. 1,173,079.

In the present case, I secure as a novel feature tuning for both oscillation frequency and group frequency, as will be explained. The grid circuit 42 of the discharge tube S contains a condenser 43 which is shunted by a high resistance 44 and battery 45 which preferably has its negative terminal connected to the grid 46. Both the resistance and the battery are provided with an adjustable shunt 47 so that the potential of the battery and amount of resistance may be both varied or, in fact, entirely eliminated. Even when the grid 46 is not maintained at a predetermined potential it will assume some negative potential as it receives electrons from the cathode *c* and its potential is determined by the surface of the grid 46 and the rate at which the charge may leak off from the condenser plates. When the grid is positively charged it will take up electrons at a rate varying with the degree of positive charge and, when the grid is negatively charged the rate at which it absorbs electrons decreases with the degree of negative charge until a value is reached at which no more electrons are taken up. The condenser charge will come to an equilibrium when the rate of leakage is equal to the rate of charging by the electrons absorbed. This grid potential may be assumed to have a negative value represented by the line *p* in Fig. 3 which represents a diagram in which the ordinates are grid potentials and the abscissæ represent time. The actual number of oscillations in each group, of course, will be much greater than indicated in Fig. 3. When the oscillations are superimposed on the grid, assuming its potential to be *p*, Fig. 3, a positive wave 48 will cause it to take up more electrons, which are not discharged during the succeeding negative wave. Each successive wave adds its increment to the negative charge which thus accumulates on the grid and the plate of the condenser connected to it. After a certain number of oscillations have thus been received the grid has received such a negative charge that it no longer takes up more electrons than it loses. When the wave train ceases, the added negative charge leaks off as indicated by the line 50, until the grid potential again assumes its original value *p*. The capacity of the condenser 43, the potential of the battery 45, if one is used, and the resistance 44 should be so chosen that the grid 46 will have resumed its equilibrium charge before the next wave train is impressed on it.

As the current in the plate circuit 51 of the tube S is determined by the grid charge, a variable current will tend to flow therein having a frequency equal to the group frequency of the signals received from the antenna and also having a high frequency component. The high frequency component of this current may be eliminated by making the circuit responsive or resonant only to the low frequency. This may be done by providing the transformer 52 with an iron core as to introduce considerable inductance into the circuit 51 and also by shunting the primary circuit of the transformer with a condenser 53. A relatively smooth low frequency alternating current will flow in the secondary circuit 54 which may be tuned for the frequency to be selected by an adjustable condenser 55.

The selectivity of the system thus is made very great as it is opaque not only to disturbances having a different frequency than the oscillations to be received but is also opaque to aerial signals having a different group of frequency. The number of circuits connected thus in series or in cascade may be increased to any desired number.

In the system illustrated the oscillations of the circuit 54 are impressed on a grid 56, in circuit with which preferably is a source of potential 57. The currents in the plate circuit 58 produced by a local source 59 are varied as already explained by variations of grid potential. The amplified and selected signals may be recorded or detected by any suitable form of device as indicated at 60.

The grids of tubes M and R may consist of fine wire, closely spaced, the grid of the device S of coarse wire, more widely spaced, and the grid 56 of tube T of fine wire widely spaced but these relations are not essential.

What I claim as new and desire to secure by Letters Patent of the United States is:—

1. A selective system for detecting signals consisting of groups of high frequency oscillations, comprising the combination of a plurality of circuits resonant to the frequency of the oscillations to be selected, relay means interposed between said respective circuits and operative to impress upon one circuit oscillations proportionate to oscillations in another circuit, means for integrating the high frequency oscillations in one of said circuits to produce a variable current having a frequency equal to the group frequency of the signals, a circuit connected thereto resonant to said group frequency and means for detecting current in said circuit.

2. A selective system for detecting signals consisting of a group of high frequency oscillations comprising a plurality of circuits, electron discharge devices connected to link said circuits in cascade, a local source of energy in circuit with each of said discharge devices, a series condenser included in the grid circuit of one of said discharge devices and means for detecting current in

the electrode circuit of the last discharge device of the series.

3. The combination of an electron discharge device having an electron-emitting cathode, a coöperating anode and a conducting body located near said cathode for controlling the electron discharge, a condenser connected in circuit with said body, a high resistance connected in shunt with said condenser and a local source of energy connected in circuit with the electrodes of said device.

4. The combination of a device operating with a substantially pure electron discharge, a grid for controlling the electron discharge, a condenser in circuit with said grid, a circuit shunting said condenser, a resistance and a battery in said circuit, means for varying the potential of said battery and amount of said resistance, and a local source of energy in the electrode circuit of said device.

5. A system for selecting groups of high frequency oscillations from disturbing oscillations comprising the combination of a circuit resonant to the frequency of the oscillations to be selected, a second circuit resonant to the group frequency of said oscillations, relay means interposed between said circuits operative to impress upon the second circuits amplified oscillations proportionate to oscillations in the first circuit and means for receiving and detecting a current in the second circuit.

6. The combination of an electron discharge device having an electron-emitting cathode, a coöperating anode and a grid for controlling the electron discharge, a condenser connected in circuit with said grid and a high resistance connected in shunt to said condenser.

7. The combination of an electron discharge device having an electron emitting cathode, a coöperating anode and a grid for controlling the electron discharge, a condenser connected in series relation in the grid circuit of said device, and a source of potential connected in shunt to said condenser.

8. The combination of an electron discharge device having an electron-emitting cathode, a coöperating anode and a grid for controlling the electron discharge, a condenser in circuit with said grid and a circuit shunting said condenser, said circuit comprising a source of potential and a high resistance.

9. The combination of an electron discharge device having an electron emitting cathode, a plate anode, and a grid inclosed in a receptacle evacuated to such a degree that the device will operate with substantially no gas ionization, grid and plate circuits for said device, means for impressing upon the grid circuit groups of high frequency oscillations, and means for integrating the high frequency oscillations to produce in the plate circuit a variable current having a frequency equal to the group frequency of the high frequency oscillations.

10. The combination of an electron discharge device having an electron emitting cathode, an anode and a grid inclosed in a receptacle evacuated to such a degree that the device will operate with substantially no gas ionization, a condenser connected in circuit with said grid, and a high resistance connected in shunt to said condenser.

In witness whereof, I have hereunto set my hand this 27th day of October, 1913.

IRVING LANGMUIR.

Witnesses:
SAUL DUSHMAN,
HELEN ORFORD.

DEFENDANTS' EXHIBIT "C"

(Patent 1,251,377 to Hull)

A. W. HULL.

METHOD OF AND MEANS FOR OBTAINING CONSTANT DIRECT CURRENT POTENTIALS.

APPLICATION FILED DEC. 22, 1915.

1,251,377. Patented Dec. 25, 1917.

Fig. 1.

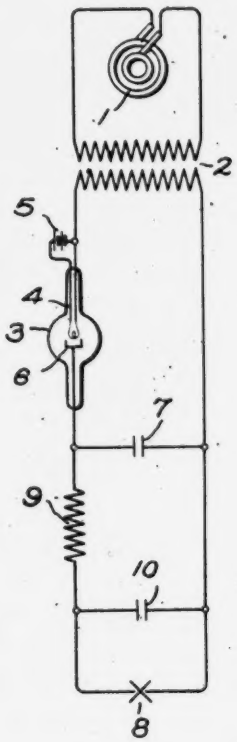

Fig. 2.

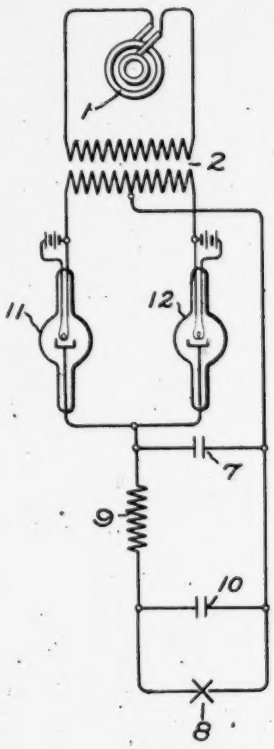

Fig. 3.

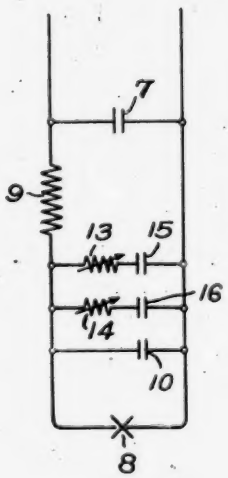

Inventor:
Albert W. Hull,
by Albert G. Davis
His Attorney.

UNITED STATES PATENT OFFICE. 777

ALBERT W. HULL, OF SCHENECTADY, NEW YORK, ASSIGNOR TO GENERAL ELECTRIC COMPANY, A CORPORATION OF NEW YORK.

METHOD OF AND MEANS FOR OBTAINING CONSTANT DIRECT-CURRENT POTENTIALS.

1,251,377. Specification of Letters Patent. Patented Dec. 25, 1917.

Application filed December 22, 1915. Serial No. 68,289.

To all whom it may concern:

Be it known that I, ALBERT W. HULL, a citizen of the United States, residing at Schenectady, in the county of Schenectady, State of New York, have invented certain new and useful Improvements in Methods of and Means for Obtaining Constant Direct-Current Potentials, of which the following is a specification.

My present invention relates to means for obtaining unidirectional currents or potentials of constant value from variable sources, more particularly from a source of alternating current.

Various means have heretofore been employed for rectifying alternating currents and inductances and condensers have been utilized for reducing the variations in the rectified current. While the current which has been obtained in this way has been of sufficiently constant value for some purposes there are many cases in which the current variations are still great enough to be objectionable.

The object of my invention is to provide means for reducing these variations either in current or potential to such a degree that they will not be noticeable in any organization in which the current may be utilized. A more particular object of my invention is to provide a means for obtaining a high direct current potential of practically constant value.

The features of my invention which I consider novel are pointed out with particularity in the appended claims, the invention itself, however, with further objects and advantages will best be understood by reference to the following description taken in connection with the accompanying drawing in which Figure 1 shows one embodiment of my invention and Figs. 2 and 3 show modifications thereof.

As indicated in Fig. 1 the alternating current which is to be rectified is derived from the alternator 1, which supplies the primary of the transformer 2, which is utilized to transform the current from the source 1 to such a degree that a direct current or potential of the desired value may be obtained by rectifying the current in the secondary of the transformer. The secondary circuit includes a rectifier 3 which is preferably of the incandescent cathode or kenotron type comprising a tungsten cathode 4 with battery 5 for heating to incandenscence, and the tungsten anode 6. By this means energy is conveyed unidirectionally to an energy storing device, which preferably consists of a condenser 7, which serves to store up that energy during the small fraction of a cycle during which it is receiving current and to supply the load 8 with energy during the remainder of the cycle. The energy thus stored up is fed to the load 8 through a high impedance 9 which is preferably an inductance but which in some cases may be an ohmic resistance or a device having ohmic resistance characteristics. This impedance together with the condenser 10 serves to smooth out the fluctuations in the voltage supplied by condenser 7. The action of the system herein shown may be described as follows:

The rectified voltage at the terminals of the condenser 7 is an irregular wave which may be analyzed into a constant potential plus a Fourier series of alternating potentials, of which the first component has a frequency equal to that of the source 1. The inductance 9 should have such a value that it will offer a very high impedance to these components as compared with the impedance of the condenser 10. Hence the amplitude which each component will have at the terminals of the condenser 10 and at the load terminals will be very small compared with the amplitude at the terminals of condenser 7, and this variation may be made as small as desired by increasing the values of inductance 9 and condenser 10. This will be true even when no power is being used. If the load 8 happens to be one of fairly low impedance it will assist the condenser 10 in reducing the value of the alternating current components. If on the other hand the load has a high impedance, such for example, as an incandescent cathode X-ray tube which has the characteristic that its current is practically independent of voltage it will have no steadying effect since its impedance is infinite for all frequencies. In this case the inductance 9 would be useless without the condenser 10. While the inductance 9 offers a high impedance to the alternating components of the current it offers a low impedance to the direct current component and hence comparatively large constant direct currents may be obtained.

From the above description it will be clear

that the efficiency of this arrangement depends upon making the impedance of 9 to the alternating components high in comparison with the impedance of condenser 10 and load 8 in parallel.

In Fig. 2 I have shown an arrangement which operates in the same manner as that shown in Fig. 1 with the exception that two rectifiers 11 and 12 are used in a well known manner in order to rectify both half waves of alternating current and thus feed energy into the condenser 7 during each half cycle instead of during every other half cycle.

In Fig. 3 I have shown another modification in which the impedance in parallel with the load is still further reduced by providing tuned circuits consisting of variable inductances 13 and 14 and condensers 15 and 16 in parallel with the load. One of these circuits is tuned to the frequency of the source which supplies the fluctuating current to condenser 7. The second circuit is tuned to the first harmonic of that frequency and, if desired, additional circuits may be provided tuned to higher harmonics. By this means the shunt impedance to the alternating components may be made very small in comparison with the impedance 9 and hence the fluctuations in the potentials supplied to the load may be made very small.

It will of course be understood that the variation in the rectified current will depend upon the capacity of the condensers 7 and 10, the value of inductance 9 and the frequency of the alternating current source and that by varying the proportions of these different factors substantially any degree of constancy in the rectified current may be secured. I have found in actual practice that with the arrangement shown in Fig. 2 with a 2000 cycle source of energy and with the condensers 7 and 10 having a capacity of about 1/1000 of a microfarad each, and the inductance 9 having a value of about 200 henries, it is possible to obtain five kilowatts of energy in the load circuit at any potential between 10,000 and 100,000 volts with a voltage fluctuation of less than 1%. The arrangement shown in Fig. 3 is especially suitable for use with lower frequencies than 2000 cycles as it is difficult to reduce the shunt impedance of the circuit sufficiently low for these lower frequencies by capacity alone without unduly increasing the size of the condenser 10.

While I have described the application of my invention to the obtaining of direct current of constant value from a source of alternating current it will be apparent that it will also be of utility in obtaining constant potential direct currents from other variable sources. For example, the condenser 7 which, in the embodiments which I have illustrated, constitutes a variable source of current, might be replaced by any other variable source with similar results. It will also be apparent that many modifications in the precise arrangement of the various devices used and in the specific form of the same may be made without departing from the scope of my invention as set forth in the appended claims.

What I claim as new and desire to secure by Letters Patent of the United States, is:—

1. The method of obtaining a constant potential direct current from an alternating current which consists in rectifying the alternating current, storing up the energy in a capacity and delivering it continuously from the capacity to a utilization circuit having an impedance in shunt to a load through a series impedance which is high in comparison with the shunt impedance of the circuit.

2. The method of obtaining a constant potential direct current from an alternating current which consists in rectifying the alternating current, storing up the energy in a capacity and delivering it continuously to a utilization circuit having an impedance in shunt to a load through a series inductance which offers a high impedance to the alternating components of the current in comparison with the shunt impedance of the circuit.

3. The method of obtaining a constant potential direct current from an alternating current which consists in rectifying the alternating current, storing up the energy in a capacity, delivering it continuously to the utilization circuit through a high series impedance, and providing an impedance in shunt to the load which is low in comparison to the series impedance.

4. The method of obtaining a constant potential direct current from a variable voltage source which consists in continuously delivering current from said source to a utilization circuit having an impedance in shunt to a load through a series impedance which is high in comparison with the shunt impedance of the circuit.

5. The method of obtaining a constant potential direct current from a variable voltage source which consists in continuously delivering current from said source to a utilization circuit having an impedance in shunt to a load through a series inductance which offers a high impedance to the variable components of the current in comparison with the shunt impedance of the circuit.

6. The method of obtaining a constant potential direct current from a variable voltage source which consists in continuously delivering current from said source to a load circuit through a high series impedance and providing an impedance in shunt to the load which is low in comparison to the series impedance.

7. Means for obtaining a constant poten-

tial direct current comprising a source of alternating current, means for rectifying the alternating current from said source, an energy storing device for storing up the energy of the rectified current, and means for continuously supplying the stored up energy from said device to a load at a substantially constant rate comprising an inductance in series with said load and a condenser in shunt thereto, the impedance of said inductance being high in comparison to that of the condenser.

8. Means for supplying a load with a constant potential direct current comprising a source of alternating current, means for rectifying the current from said source, a condenser for storing up the energy of the rectified current, a device permanently connected in series with the load which offers a high impedance to the alternating component of the current flowing therethrough but a low impedance to the direct current component of said current and a device permanently connected in shunt to the load which offers a high impedance to the direct current component and a low impedance to the alternating current component.

9. Means for producing a constant high potential direct current comprising a source of alternating current of high potential, an incandescent cathode rectifier for rectifying the alternating current from said source, a condenser for storing up the energy of the rectified current, means for supplying the stored up energy to a load at a substantially constant rate comprising an inductance permanently connected in series with said load and a condenser permanently connected in shunt thereto, the impedance of said inductance being high in comparison to that of the condenser.

10. Means for supplying a load with a constant potential direct current from a variable voltage source comprising a device connected permanently in series with the load which offers a high impedance to the alternating component of the current flowing therethrough but a low impedance to the direct current component of said current, and a device connected permanently in shunt to the load which offers a high impedance to the direct current component and a low impedance to the alternating current component.

11. Means for supplying a load with a constant potential direct current from a variable voltage source comprising the combination of an inductance permanently connected in series with the load and a condenser permanently connected in shunt thereto, the impedance of said inductance being high in comparison with that of the condenser.

In witness whereof, I have hereunto set my hand this 21st day of December, 1915.

ALBERT W. HULL.

DEFENDANTS' EXHIBIT "D"

(Patent 1,195,632 to White)

W. C. WHITE.

CIRCUIT CONNECTION OF ELECTRON DISCHARGE APPARATUS.

APPLICATION FILED AUG. 23, 1915.

780 1,195,632. Patented Aug. 22, 1916.

Fig. 2.

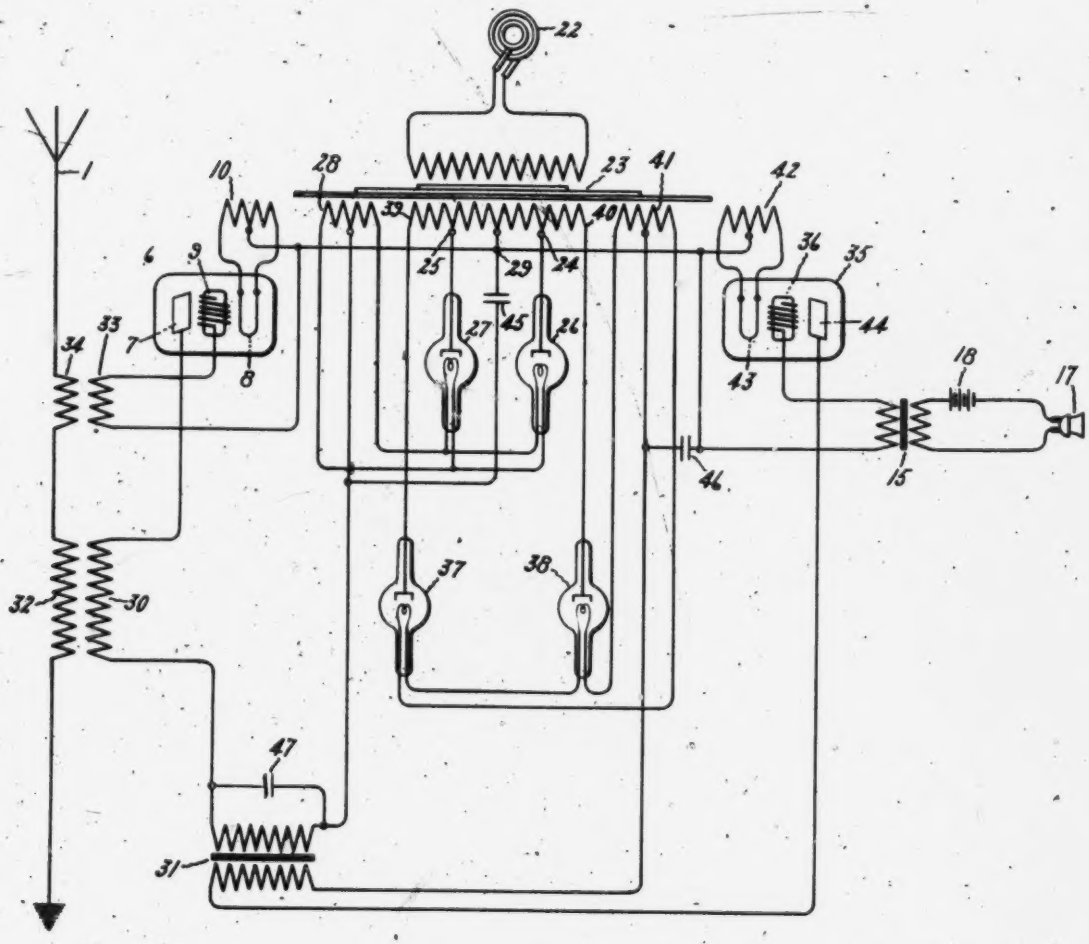

Fig. 1.

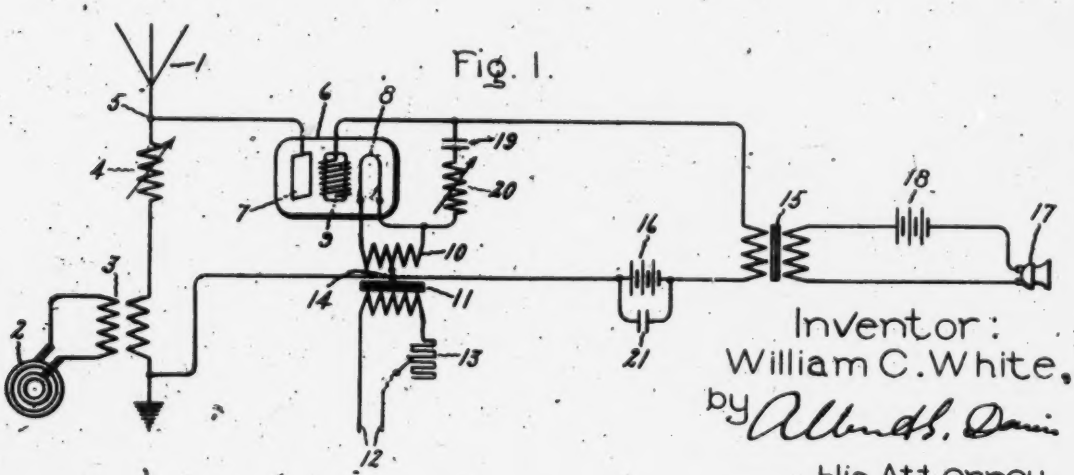

Inventor:
William C. White,
by Albert G. Davis
His Attorney.

UNITED STATES PATENT OFFICE.

WILLIAM C. WHITE, OF SCHENECTADY, NEW YORK, ASSIGNOR TO GENERAL ELECTRIC COMPANY, A CORPORATION OF NEW YORK.

CIRCUIT CONNECTIONS OF ELECTRON-DISCHARGE APPARATUS.

1,195,632. Specification of Letters Patent. Patented Aug. 22, 1916.

Application filed August 23, 1915. Serial No. 46,770.

To all whom it may concern:

Be it known that I, WILLIAM C. WHITE, a citizen of the United States, residing at Schenectady, in the county of Schenectady, State of New York, have invented certain new and useful Improvements in Circuit Connections of Electron-Discharge Apparatus, of which the following is a specification.

This application is a continuation in part of my prior application, Serial No. 32,367, filed June 5, 1915.

My present invention relates to circuit connections for electron discharge apparatus and more especially electron discharge apparatus of the type in which a filamentary cathode inclosed in an evacuated envelop is provided with means for heating to incandescence to cause it to emit electrons which may serve to convey negative electricity to a coöperating anode inclosed in the same envelop. Such devices may be used for producing X-rays or rectifying alternating current or, when provided with a controlling grid, for amplifying variable currents, detecting wireless signals and for various other purposes.

It has been customary prior to my invention to provide for heating the cathode a direct current source such as a battery or direct current generator. The external circuit connections to the cathode have been made to one side of the filament and as a result all parts of the filament have not been at the same potential with respect to the anode or the grid, the difference between extreme ends being equal to the potential impressed upon the filament. Where a source of direct current is employed, this difference of potential is constant and, therefore, will not produce variations in the operation of the device. It is, however, more convenient in many cases to employ an alternating current for heating the filament, and, when this is done and the connections made to one side of the filament, the potential variations which are thereby introduced may seriously affect the efficient operation of the device.

The object of my invention is to provide an improved circuit connection for electron discharge devices whereby alternating current may be employed for heating the filament and the disadvantage above mentioned, as well as others which will hereinafter appear, may be overcome.

In the practical application of my invention, current for heating the filament is obtained from the secondary of a transformer and the connections from anode and grid to the cathode are made to the middle point of the secondary winding. When the connections are made in this way the average difference of potential at any instant between different portions of the cathode and the grid and anode, due to the heating current, will be zero.

My invention will best be understood by reference to the following description taken in connection with the accompanying drawing in which—

Figure 1 shows one organization for transmitting wireless signals in which the filament of the electron discharge device is supplied with alternating current and in which my invention may be employed to advantage; and Fig. 2 shows a different transmitting system in which a source of alternating current is utilized for other purposes as well as heating the cathodes of the various electron discharge devices used.

In the organization illustrated in Fig. 1, the antenna 1 is grounded as usual and has connected thereto a source of high frequency oscillations which in this case consists of a high frequency alternator 2. This may be inductively connected to the antenna by means of the transformer 3 or may be connected directly thereto, if desired. An inductance 4 which may be varied to tune the antenna circuit to the desired frequency may be placed in series with the antenna. An energy consuming device 6 which, in the present case, consists of an electron discharge relay comprising an exhausted envelop containing an anode 7, a cathode 8 and a conducting grid shaped body 9 interposed between the cathode and anode is connected to two points in the antenna circuit between which there is normally a large difference of potential. In the present case it is connected between the point 5 in the antenna and ground. The cathode 8 is of filamentary form, preferably of tungsten, and is provided with current for heating it to incandescence by the secondary 10 of the transformer 11 which may be supplied with alternating current from the mains 12. The temperature of the cathode may be adjusted by means of a variable resistance 13 in the primary circuit of the transformer. The

connection between the cathode of this device and ground is brought to the point 14 which is the middle point in the winding of the secondary 10. A second connection to this same point is made from the grid 9 through the secondary of the transformer 15 and battery 16. The primary circuit of the transformer 15 includes a telephone transmitter 17 with local battery 18. A second circuit consisting of the condenser 19 and the variable inductance 20 is provided between the grid 9 and cathode 8. In the operation of this system to secure the best possible results it will usually be found desirable to adjust the current flowing through relay 6 so that about one-half of the energy of the source 2 is normally diverted from the antenna circuit. This may be done by adjusting the potential impressed upon the grid 9 by the battery 16. In order that the currents produced in the secondary of the transformer 15 may not be compelled to flow through the battery 16, condenser 21 may be inserted in shunt to this battery. When sound waves act upon the transmitter 17 potential variations are set up in the secondary of the transformer 15 and the potential of the grid 9 is thereby varied in accordance with the variations in the sound waves. As a result the amount of energy which is diverted from the antenna through relay 6 is varied accordingly and there is a corresponding variation in the energy radiated from the antenna.

In the preferred construction of the electron discharge relay 6, the anode 7 is made up of one or more plates of considerable area and the grid 9 consists of a number of turns of fine wire wound on a supporting frame work and located in parallel relation to the anode plate or plates. The cathode 8 is also preferably located in a plane parallel to the grid and anode. The distance between these members is preferably small and as a result there is an appreciable capacity between them. It will be seen that with the arrangement indicated the anode 7 is alternately positive and negative with respect to the cathode and that as a result the grid 9 will have induced thereon by electrostatic induction positive and negative charges. Although the grid and cathode are connected electrically reversals in polarity in the induced charges are so rapid that the potential difference between the two at times may become very large, the secondary of the transformer 15 offering high impedance to the flow of high frequency charging current between the grid and cathode. As a result the positive potential which may be induced on the grid 9 when the anode is also positive may become so great as to allow enough current to flow through the relay 6 to divert from the antenna nearly all of the energy from the high frequency source, even when no potential is induced upon the grid by means of the telephone transmitter. Also the potentials induced by the secondary of the transformer 15 are in most cases small in comparison to this induced potential and hence will produce little variation in the current flowing through the relay 6. In order to overcome this difficulty the circuit comprising the condenser 19 and inductance 20 is tuned to the frequency of the source 2 so as to serve as a short circuit between grid and cathode for these induced charges.

In case the connection from the grid to the cathode through the secondary of transformer 15 were made to one end of the secondary 10 which supplies current for heating the filament the difference of potential between the opposite end of the cathode and the grid would fluctuate by an amount equal to the filament voltage. As a result there would be a corresponding variation in the amount of energy diverted from the antenna. That is, in addition to the variations produced by the action of the sound waves there would be variations having a frequency equal to that of the source supplied to transformer 11. These variations of course would impair the transmission of the desired signals. This difficulty however is overcome by connecting the grid to the middle point of transformer 10 thereby neutralizing the effect of any differences of potential between grid and filament due to the potential alternations of the source used for heating the filament. The amount of energy diverted from the antenna also depends upon the difference of potential between the anode and cathode and with the connection from anode to cathode. Made to one side of the filament there would be the same variation in potential between anode and cathode as between cathode and grid. This difficulty is also overcome by connecting the anode to the middle point of secondary 10.

In the system illustrated in Fig. 2, electron discharge device 6 is employed to produce continuous waves in the antenna 1. In order to accomplish this, anode 7 and cathode 8 are connected to a source of direct current which is obtained by rectifying alternating current from the source 22 which supplies transformer 23, the secondary turns of which are subdivided to give different voltages. One group 10 of the secondary turns provides current for heating cathode 8. Current for the plate circuit of device 6 is derived from the secondary turns between points 24 and 25, electron discharge rectifiers 26 and 27 being employed to rectify the alternating current. The group of secondary turns 28 provides current for heating the cathodes of these rectifiers. Connection to cathode 8 is made between a neutral point 29 in the transformer secondary and the middle point of group 10 of secondary turns.

A connection is also provided from the anode 7 to the cathodes of rectifiers 26 and 27 through inductance 30 and the secondary of transformer 31 to the middle point of group 28. The inductance 30 is inductively related to the inductance 32 in the antenna. The circuit, which includes the cathode 8 and the grid 9, contains an inductance 33 which is coupled to a second inductance 34 in the antenna. The coupling between 30 and 32 is preferably close, while that between 33 and 34 may in some cases be made very loose. The circuit which comprises the direct current source of supply, the inductance 30, the cathode 8 and anode 7, for convenience of description I designate the plate circuit. The circuit which comprises the grid 9, inductance 33 and cathode 8, I designate the grid circuit. With this arrangement, when current starts to flow in the plate circuit, potential is induced in coil 32 and in the antenna. This produces a corresponding induced potential in coil 33 and varies the potential of the grid 9. This change in grid potential in turn produces a variation in the current in the plate circuit. When the potential produced in the grid circuit causes the grid to become more negative the current flowing in plate circuit is decreased while an induced potential which makes the grid more positive increases the current flow in the plate circuit. These variations in the current in the plate circuit produce an alternating current in the antenna, the frequency of which will be the same as the frequency to which the antenna is tuned. The amplitude of the high frequency waves thus produced in the antenna will, among other things, depend upon the potential of the direct current source and will be constant as long as this potential is constant and other conditions also remain unchanged but their amplitude will vary in accordance with any variations in potential supplied to the plate circuit. In order to vary the amplitude of these waves in accordance with sound waves, potential variations corresponding to those set up in the secondary of transformer 15 are impressed upon the plate circuit. The potential variations in the secondary of transformer 15 are in the present case amplified by a second electron discharge device 35 similar in structure to device 6. This is done by impressing the potential variations upon the grid 36 of device 35. The amplified potential variations thereby set up in the plate circuit of device 35 are impressed upon the plate circuit of device 6 by means of the transformer 31. A direct potential for the plate circuit of device 35 is obtained in the same manner as for device 6. In the operation of this particular system, I have found it desirable to employ a higher voltage for device 35 than for device 6. To provide this higher voltage, a larger number of secondary turns of the transformer are utilized and rectifiers 37 and 38 are connected to points 39 and 40 respectively. The group of secondary turns 41 provides current for heating the cathodes of these rectifiers. Connection is made from point 29 to the middle point of group 42, which provides current for heating cathode 43 and from the anode 44 of device 35 to the cathodes of rectifiers 37 and 38 through the primary of transformer 31 to the middle point of group 41. Condensers 45 and 46 may be employed to smooth out the variations in potential of the rectified current supplied to devices 6 and 35 and condenser 47 to provide a shunt path for the high frequency component of the current in the plate circuit of device 6 around the secondary of transformer 31. When high frequency variations of current are occurring in the plate or grid circuits of the different devices, this current passes through the central taps of the transformers to the filaments without undue impedance, and divides equally between the two legs of the filament loop, as the inductance of the two sides of the winding is neutralized.

While I have described the application of my invention to only two systems for transmitting wireless signals, it will be apparent to one skilled in the art that it will be of utility in many other organizations in which electron discharge devices are employed, for wireless signaling or other purposes, and that numerous applications thereof may be made without departing from the scope of the appended claims.

What I claim as new and desire to secure by Letters Patent of the United States is:—

1. The combination with an electron discharge device comprising an evacuated envelop having therein a filamentary cathode and a coöperating anode of a source of alternating potential applied to said cathode for heating it to incandescence and external circuit connections between said cathode and anode so arranged that the average potential difference between cathode and anode at any instant is independent of the potential applied to the cathode for heating purposes.

2. The combination with an electron discharge device comprising an evacuated envelop having therein a filamentary cathode and a coöperating anode of a transformer connected to a source of alternating current and having its secondary connected to said cathode for heating it to incandescence and an external circuit connection between said anode and the central point in the secondary winding of said transformer.

3. The combination with an electron discharge device comprising an evacuated envelop having therein a filamentary cathode, a coöperating anode, and a discharge controlling grid, of a source of alternating po-

tential applied to said cathode for heating it to incandescence and external circuit connections between said cathode and anode and between said cathode and grid so arranged that the average potential difference between cathode and anode and between cathode and grid at any instant is independent of the potential applied to the cathode for heating purposes.

4. The combination with an electron discharge device comprising an evacuated envelop having therein a filamentary cathode, a coöperating anode and a discharge controlling grid of a transformer connected to a source of alternating current and having its secondary connected to said cathode for heating it to incandescence and external circuit connections between said anode and said grid, and the central point in the secondary winding of said transformer.

5. The combination with an electron discharge device comprising an evacuated envelop having therein a filamentary cathode and a discharge controlling grid of a source of alternating potential applied to said cathode for heating it to incandescence and external circuit connections between said cathode and grid so arranged that the average potential difference between cathode and grid at any instant is independent of the potential applied to the cathode for heating purposes.

6. The combination with an electron discharge device comprising an evacuated envelop having therein a filamentary cathode and a discharge controlling grid of a transformer connected to a source of alternating current and having its secondary connected to said cathode for heating it to incandescence and an external circuit connection from said grid to the central point in the secondary winding of said transformer.

In witness whereof, I have hereunto set my hand this 20th day of August, 1915.

WILLIAM C. WHITE.

DEFENDANTS' EXHIBIT "E"

(Patent 1,587, 084 to Robinson)

785 June 1, 1926. 1,587,084

G. D. ROBINSON

CIRCUITS FOR ELECTRON DISCHARGE DEVICES

Filed Nov. 1, 1920 2 Sheets-Sheet 1

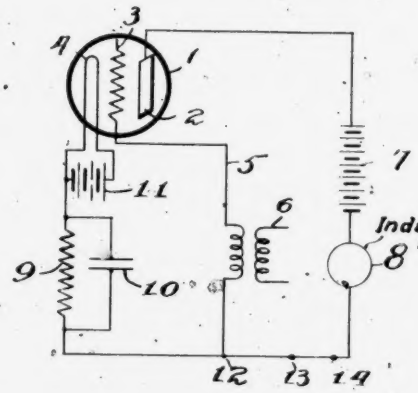

Fig. 1.

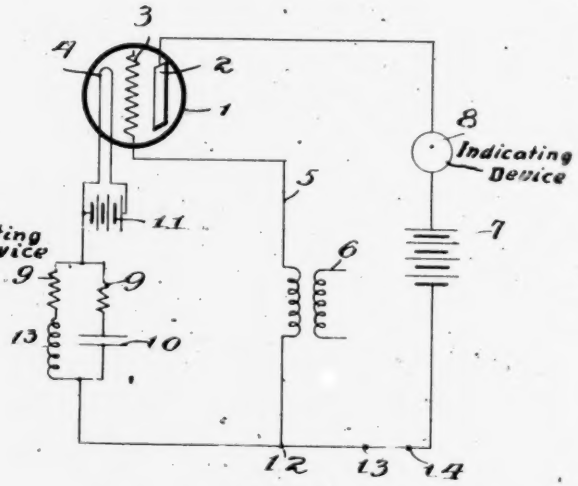

Fig. 2.

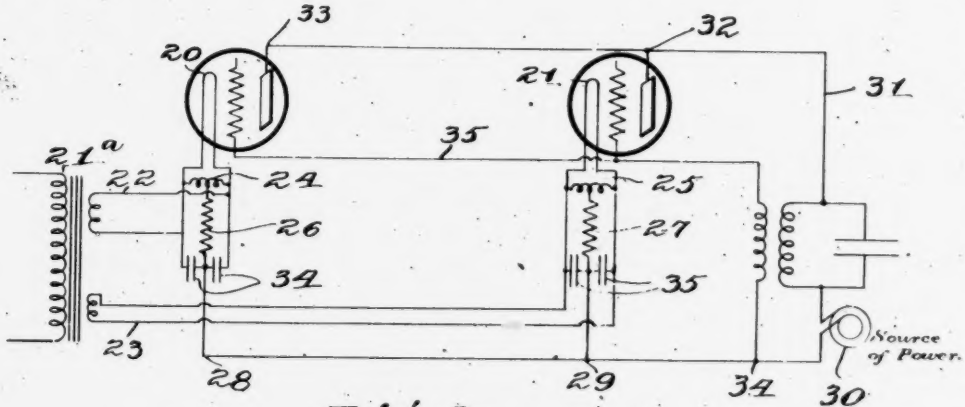

Fig. 3.

Inventor
G. D. Robinson.

By Shuttleworth & Ingerson
Attorneys

786 June 1, 1926. 1,587,084

G. D. ROBINSON

CIRCUITS FOR ELECTRON DISCHARGE DEVICES

Filed Nov. 1, 1920 2 Sheets-Sheet 2

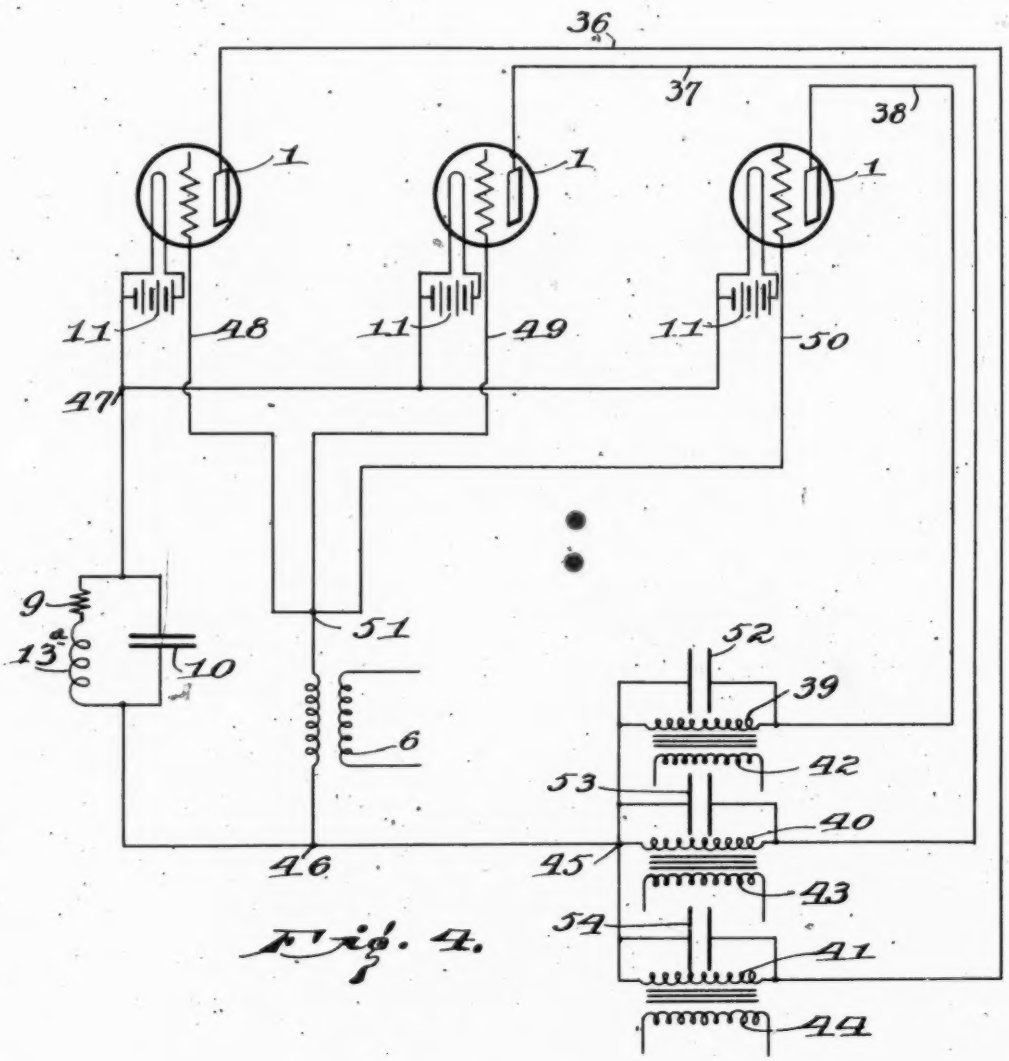

Fig. 4.

[redacted]ventor
G. D. Robinson.

By Stuttevant Mussoin
Attorneys

UNITED STATES PATENT OFFICE.

GORDON DUDLEY ROBINSON, OF ANNAPOLIS, MARYLAND.

CIRCUITS FOR ELECTRON DISCHARGE DEVICES.

Application filed November 1, 1920. Serial No. 421,027.

The present invention relates to methods and means for controlling potentials and current flowing in circuits associated with the electron discharge devices. In one form the invention consists in an arrangement of circuits in connection with an electron discharge device in which the value of a varying current is regulated by means of a regulating current or potential which in itself has a varying regulating action on the controlled current depending upon the frequency and decrement of the controlled current or potential.

The present invention contemplates the utilization of an arrangement of circuits associated with electron discharge devices in which a modifying or regulating effect of a regulating current or potential is utilized to prevent variations of the control current or potential at certain definite frequencies while regulating to a lesser extent changes in the controlled current or potential at other frequencies. The modifying or regulating effect of the regulating current or potential may also be utilized to prevent variations of the control current or potential except at certain predetermined frequencies.

It is an object of the present invention to provide an arrangement of circuits associated with an electron discharge device whereby a regulating potential is superimposed upon the actuating grid potential.

It is a further object of the present invention to provide an arrangement of circuits associated with electron discharge devices whereby a regulating potential is superimposed upon the actuating grid potential, the regulating potential having a variable value in accordance with the frequency and decrement of the current flowing in one of the associated circuits.

It is a still further object to provide an arrangement of circuits associated with electron devices in which the plate circuits are energized from an alternating current supply, and a regulating potential is superimposed upon the grid potential for the purpose of minimizing the low frequency variations in plate current.

The present invention contemplates the use of any form of electron discharge device having one or more anodes, one or more cathodes and one or more control members such as a grid, the electron discharge device preferably being of the type in which the slope of the internal characteristic is steep so that relatively large changes of plate current are produced by small changes of grid potential.

In the accompanying drawings:

Figure 1 shows diagrammatically an arrangement of circuits representing a preferred form of my invention;

Figure 2 a modification thereof; and

Figure 3 a second modification in which the average current in each of a plurality of parallel connected tubes is regulated in order to maintain the same approximately constant in spite of variations of potential existing in the grid circuits of the tubes.

Figure 4 shows a third modification in which a plurality of parallel connected tubes have their plate circuits energized from a polyphase alternating current source, a regulating potential being impressed upon the grid circuits to minimize the low frequency variations in the average of all the plate currents.

Referring to Figure 1, an electron discharge device or audion 1, is shown, having a plate 2, grid 3, and filament 4. Connected to the grid 3 is a controlling circuit 5 adapted for connection to any source of actuating potential in any well known manner such as by the coupling 6, this source being of a magnitude suitable for the operation of the tube or audion. The plate or anode 2 is connected through a battery or suitable source of potential 7 through a useful load 8, which may include a current indicating device, to the filament through an aperiodic impedance consisting (as shown in Figure 1) of a resistance 9 in parallel with a condenser 10. Such an impedance is differently responsive to different frequencies yet substantially constant over a certain useful range of frequencies. Filament battery 11 supplies energy for the heating of the filament 4.

Assuming that a current is flowing from the plate 2 to the filament 4 through the tube, if by means of the grid circuit 5 a difference of potential is established between the grid and filament making the grid more positive than before, a much larger current will flow from the filament 4 to the plate 2 through the external circuit. This increased current flow will in turn cause an increased drop of potential through the resistance 9 and a corresponding change in the value of the charge in the condenser 10. After the charge in the condenser 10 has passed the

transitory state and becomes constant, the drop of potential through the resistance 9, being in the grid filament circuit, will act in opposition to the actuating potential previously impressed upon the circuit 5 so that the change in the anode or plate current is substantially less than would have been the case if the grid circuit 5 were not connected to the external plate circuit at 12 so as to be susceptible to the drop of potential through the impedance composed of resistance 9 and condenser 10. It will therefore be seen that variations in the plate current flowing in the external circuit superimposes upon the grid a regulating potential opposite in sign to that of the actuating potential imposed upon the grid from the source 6. If, as in normal operation, a high frequency actuating potential is imposed upon the grid circuit from the source 6, corresponding variations in the anode or plate current will be produced, the same flowing through the external circuit. These variations of plate current will pass through the condenser 10 readily, only the average or direct component of the plate current being compelled to pass through the resistance 9. As a result of this, variations of plate current will be but little modified by the drop of potential through the impedance consisting of resistance 9, capacity 10, and such stray or distributed capacity as is inherent in the apparatus, while at the same time any gradual changes in the average value of plate current will introduce a corresponding potential drop through the resistance 9, and impress upon the grid circuit a regulating potential which will tend to prevent this change. This arrangement of circuits thereby tends to keep an average constant plate current with but little effect upon any high frequency current flowing in the plate circuit. The circuit just described is of course adapted for reception, as well as the production of high frequency oscillations.

The modification shown in Figure 2 consists of the same circuit arrangement as that described in connection with Figure 1 with the exception that a slightly different form of impedance is disclosed. The impedance in this case consists of resistance or resistances 9 and inductance 13 in parallel with the condenser 10. By such construction this impedance may be made resonant to certain definite frequencies and the regulating potential impressed upon the grid circuit will have a maximum value with respect to the plate current flowing at certain desired frequencies. The impedance may be designed to have either a maximum or a minimum value for any given range of frequencies. The effectiveness of an impedance used in this circuit arrangement for regulating the anode or plate current does not depend upon its absolute value but rather upon its value compared to the internal impedance of the tube. While not limiting myself to any specific values of impedance 9 and 10, to be used by way of example it is stated that very satisfactory results were obtained where the resistance 9 was composed of slightly inductive resistance unit having an impedance of 1000 ohms, the condenser 10 having also an impedance value of about 1000 ohms and the internal impedance of the plate circuit was in the order of 100,000 ohms. The loop thus formed is aperiodic, i. e., its ratio of resistance to inductance and capacity inhibits oscillations. Since the resistive impedance is substantially independent of frequency and the inductive impedance is small, the capacitive impedance determines its action upon currents of different frequencies.

In some instances it has been desirable to control the plate current by the insertion of an impedance between points 13 and 14 in the plate circuit as shown in Figures 1 and 2. Such regulation demands the use of an impedance which tends to cut down the average value of plate current. By making use of circuits such as disclosed in Figures 1 and 2, however, the use of a much smaller impedance located as shown secures the desired regulation. The relationship existent between the values of the impedance shown in these figures and the fictitious impedance located between points 13 and 14 in the plate circuit which it replaces is substantially $(\mu+1)Z$, in which Z is the actual value of the impedance used and μ is the amplification constant of the tube when the grid is operated with but a negligible direct component in the grid current.

Figure 3 discloses a modification in which regulating potentials are impressed upon the grid circuits of a plurality of tubes in parallel for the purpose of obtaining a definite division of load between the tubes and at the same time appreciably preventing variation in the average value of plate current. In this circuit arrangement, the filaments 20 and 21 are heated by means of alternating current, although this is of course not a necessary requirement for the application of the present invention, the heating current being obtained from a transformer 21^a having separate secondaries 22 and 23 for the tubes. Choke coils 24 and 25 are connected across the terminals of the filaments 20 and 21 and have central taps leading therefrom through resistances 26 and 27 respectively to the plate circuit 28, 29, 30, 31, 32 and 33. Condensers 34 and 35 cooperate respectively with the impedances 26 and 27 in substantially the same manner as resistance 9 and capacity 10 in Figure 1 to impose upon the grid circuit 34 and 35 regulating potentials in accordance with the voltage drop existent in the external circuits between filaments 20

and 21 and the point 34 in the plate circuit. In each of the tubes there is therefore a tendency to hold an average definite value of anode current and there is thus a tendency towards a definite division of load between the tubes. It is further obvious that this arrangement may be applied to any number of tubes in parallel.

The modification shown in Figure 4 discloses the present invention as applied to a plurality of tubes in parallel in which the plate circuits are energized from an alternating current source. In this figure the tubes 1 have their filaments excited in any suitable manner as by batteries 11, the anodes of the tubes being connected respectively by means of circuits 36, 37 and 38 to the secondaries 39, 40 and 41 of low frequency transformers. The primaries of these transformers 42, 43, and 44 are connected to a three phase alternating current source. Instead of using separate transformers a three phase transformer of any suitable type might be employed. It is also feasible to employ either two phase or single phase current to provide for the excitation of the plate circuit, the single phase current being applied either directly to the primaries of the three transformers, or being connected thereto thru any well-known type of a phase splitting device so that the phases in the secondaries of the transformers will be suitably displaced one from the other.

The other ends of the secondary windings are connected to a common conductor at the point 45, a circuit leading from this point thru the regulating impedance 9, 10, 13ª to a common point 47 to which point the circuit branches to the three filaments of the tubes. The grid circuits 48, 49 and 50 lead to a common point 51 which is connected to the common plate circuit at 46, a suitable source of controlling or actuating potential being introduced in the common grid circuit by the coupling 6. As here shown the coupling 6 is adapted to energize the common portion of the grid circuits, but the actuating potential might also be impressed separately upon the separate grid circuits at points between the common point of connection 51 and the grids. Condensers 52, 53, and 54 are placed in parallel with the secondaries of the low frequency transformers in the plate or anode circuits in order to permit the high frequency pulsations to flow in the anode circuits without interference. From the description of the circuits already given in connection with Figure 1, it will be evident that the impedance 9, 10, 13ª imposes upon the grid circuits of the tubes, a regulating potential the tendency of which is to prevent variations in the plate current. In the arrangement of the circuits shown in connection with Figure 4 the resultant variation of the plate current is primarily much reduced when three phase current is utilized for the excitation of the plate circuits, the overlapping of the phases producing a resultant effect which is that of a varying direct current. By utilizing applicant's method of applying a regulating potential to the grid circuits the varying flow of current in the plate circuits is still further minimized, and a tendency towards a smooth resultant of the plate current is obtained.

The particular embodiments of my invention herein disclosed are of course susceptible to considerable variation without departing from the spirit thereof, and it is to be understood that many changes might be made by those skilled in the art within the scope of the invention as defined within the appended claims.

What I claim is:

1. The combination with an electron discharge device having a cathode, an anode, and a grid, of an external circuit connecting the cathode and grid and having therein means to impress upon said grid an actuating potential from an external source, a second external circuit connecting said cathode and anode and including an indicating device and having a portion in common with said first circuit, and an aperiodic loop circuit in series with the common portion of said circuits whereby low frequency variations in the anode current are opposed.

2. The combination with an electron discharge device having a cathode, an anode, and a grid, of an external circuit connecting the cathode and grid and having therein means to impress upon said grid an actuating potential from an external source, a second external circuit connecting said cathode and anode and including an indicating device and having a portion in common with said first circuit, and an aperiodic loop circuit comprising two branches in series with the common portion of said circuits, one of said branches containing inductive reactance and ohmic resistance and the other branch containing capacitive reactance, whereby said loop circuit is more actively operative at a certain frequency or frequencies than at other frequencies whereby low frequency variations in the anode current are opposed.

3. The combination with an electron discharge device having a cathode, an anode and a grid, of an external circuit connecting the cathode and grid and having intercalated means to impress upon said grid an actuating potential, a second external circuit connecting said cathode and anode and having a portion in common with said first external circuit, and an aperiodic loop in series in the common portion of said circuits to oppose variation of the anode current.

4. The combination with an electron dis-

charge device having at cathode, an anode and a grid, of an external circuit connecting the cathode and the grid and having intercalated therein means for impressing an actuating potential upon said grid, a second external circuit connecting said cathode and anode, said external circuits having a common portion, and means in said common portion whose impedance varies inversely with the frequency to oppose low frequency variations in the anode current or potential.

5. The combination with an electron discharge device having a cathode, an anode and a grid, of an external circuit connecting the cathode and the grid and having intercalated therein means for impressing an actuating potential upon said grid, a second external circuit connecting said cathode and anode, said external circuits having a common portion, and means controlled by the anode current in said common portion whose impedance varies inversely with the frequency to oppose low frequency variation in the anode current.

6. The combination with an electron discharge device having a cathode, an anode and a grid, of an external circuit connecting the cathode and grid and having intercalated therein means for impressing upon said grid an actuating potential from an external source, a second external circuit connecting said cathode and anode, a common portion of said circuits having two branches constituting a series loop circuit, and a resistance and a capacitance respectively in said branches, said loop circuit serving to oppose variations in the anode current or potential.

7. The combination with a circuit embodying a plurality of electron discharge devices in parallel, each having a cathode, an anode, and a grid, of grid circuits connecting each grid to the corresponding cathode, anode circuits connecting each anode to the corresponding cathode, said anode circuits having a common conductor, a source of anode current in said conductor, a portion of each anode circuit being common to the grid circuit of the corresponding electron discharge device, and means in said common portion for opposing changes in the anode current of that particular device.

8. The combination with a circuit embodying a plurality of electron discharge devices in parallel, each having a cathode, an anode, and a grid, of grid circuits connecting each grid with the corresponding cathode, anode circuits connecting each anode with the corresponding cathode, said anode circuits having a common conductor, a source of anode current in said common conductor, a portion of each anode circuit being common to the grid circuit of the corresponding electron discharge device, and means in said common portion for opposing changes in the anode current of that particular device, said means being more actively operative at a certain frequency or frequencies than at other frequencies.

9. The combination with an electron discharge device having a cathode, an anode, and a grid, of an external circuit including a source of electricity to energize said cathode and connected thereto, an inductance connected in shunt across said cathode, two condensers in series connected in shunt across said cathode, a resistance connected between the midpoint of said inductance and the midpoint of said condensers, an external conductor connecting the grid with the midpoint of said condensers, and a second external conductor connecting the anode with the midpoint of said condensers.

10. The combination with a circuit employing a plurality of electron discharge devices in parallel, each having a cathode, an anode, and a grid, of an anode circuit connected to all of said anodes, a source of anode current in said anode circuit, and means for a substantially equal distribution of load between said devices comprising an impedance of relatively high value for a constant or slowly varying current inserted in the anode circuit of each device at a point common to the grid circuit of said device so that the voltage drop due to the anode current flowing through said impedance will be impressed upon the grid circuit of that tube.

11. In a circuit including a vacuum tube comprising a cathode, a grid and an anode, connections for energizing the said elements, a portion of said connections being common, means in said common portion for opposing oscillations due to electrical interaction comprising a loop circuit containing resistance and capacity, the reactance of the former being greatly in excess of that of the latter at operating frequencies.

In testimony whereof, I affix my signature.

GORDON DUDLEY ROBINSON.

DEFENDANTS' EXHIBIT "F"

(Patent 1,105,924 to Pridham & Jensen)

E. S. PRIDHAM & P. L. JENSEN.

TELEPHONE.

APPLICATION FILED AUG. 20, 1913.

1,105,924.

Patented Aug. 4, 1914.

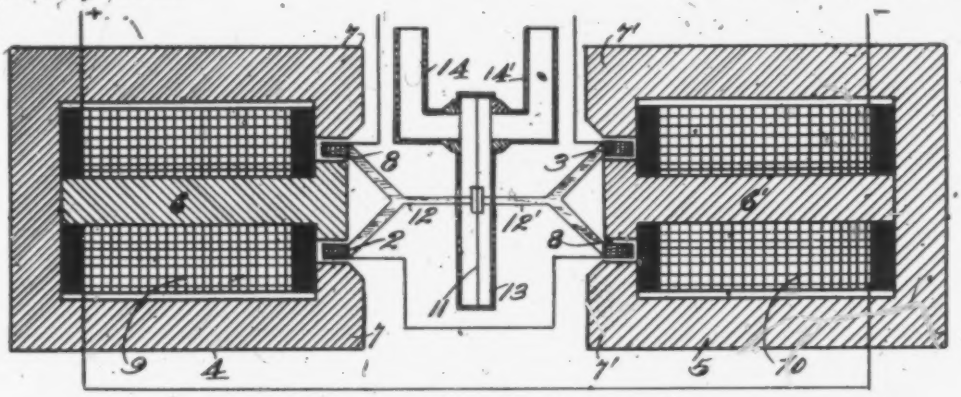

Fig. 1.

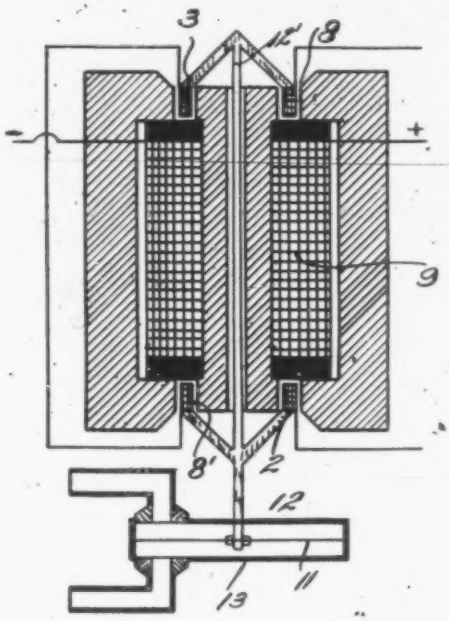

Fig. 2.

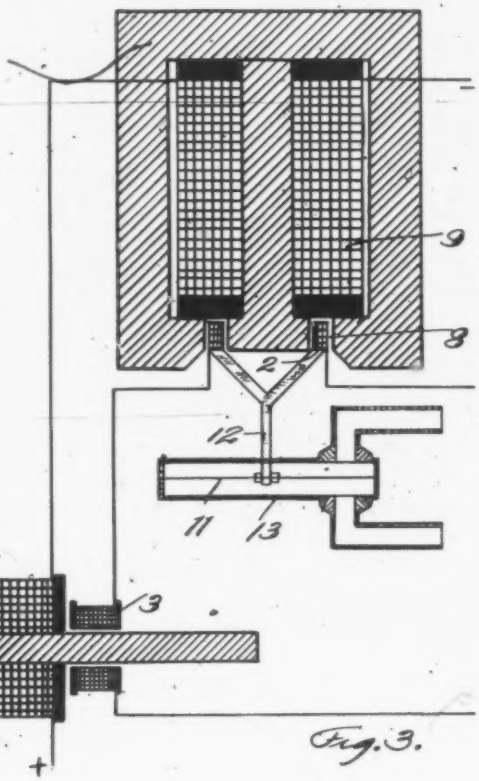

Fig. 3.

WITNESSES:

F. E. Maynard

Charles Pickles

INVENTORS

Edwin S. Pridham

Peter L. Jensen,

BY F. H. Strong

ATTORNEY

UNITED STATES PATENT OFFICE. 792

EDWIN S. PRIDHAM AND PETER L. JENSEN, OF NAPA, CALIFORNIA, ASSIGNORS TO COMMERCIAL WIRELESS & DEVELOPMENT COMPANY, OF SAN FRANCISCO, CALIFORNIA, A CORPORATION OF ARIZONA.

TELEPHONE.

1,105,924. Specification of Letters Patent. Patented Aug. 4, 1914.

Application filed August 20, 1913. Serial No. 785,694.

To all whom it may concern:

Be it known that we, EDWIN S. PRIDHAM, a citizen of the United States, and PETER L. JENSEN, a subject of the King of Denmark, residing at Napa, in the county of Napa and State of California, have invented new and useful Improvements in Telephones, of which the following is a specification.

This invention relates to telephones, and particularly to receiving apparatus.

The object of the present invention is to provide a telephonic receiving instrument of the moving annular coil type, so constructed that fluctuations of field strength acting upon the telephonic conductor will have no effect upon the diaphragm of the device.

Types of receiving instruments employing magnetic fields in which are disposed freely movable coils are known and have been used with a high degree of success.

In our invention we employ a combination of magnetic structures with central poles and circumferential surrounding poles; between the central poles and surrounding poles are air-gaps of substantially annular form. In these air-gaps are respectively disposed portions of a telephonic conductor. These portions of conductor take the form of annular coils which are freely movable in the air-gaps of the magnetic circuits. Either one or both of the coils may be connected to the diaphragm of the instrument. When both coils are connected to the diaphragm the electrical connections must be such that the effects are additive upon the diaphragm. In any case the sections of the telephonic conductor are connected together so that telephonic currents may act throughout the entire length of the conductor.

In instruments of the class wherein an annular movable coil has been employed it has heretofore been necessary to use direct current from either a primary or secondary battery when electro-magnets produce the magnetic field. When direct current from a dynamo has been used a strong reaction takes place owing to fluctuations of the current due to the commutator action. This reaction is caused by variations of the field strength which induces currents in the telephonic coil. These currents reacting upon the normal field strength produce the vibration which greatly interferes with the action of the instrument. Concerning the development of these induced currents in the telephonic coil, it can be shown that a decreasing field strength will produce an induced current in the same direction as the energizing current while an increasing field strength produces an induced current in the opposite direction to the energizing current.

In the instrument under consideration we have used direct current with a high degree of success even when the fluctuations of current were strong. The desired results in this instrument being obtained by dividing the telephonic conductor in two sections, each section being subjected to the influence of a magnetic field energized by the fluctuating current. The sections of the telephonic conductor are then so connected together that the induced currents generated in either section neutralize each other while the telephonic current from the working source is free to flow throughout the entire conductor and accomplish its purpose.

As will be seen from the drawings, both sections of the conductor may be made to act upon the diaphragm or only one section used for that purpose, the other section being used to neutralize the induced currents in the acting section.

Our invention simply comprehends the use of a divided telephonic conductor each section of which is subjected to a magnetic field energized from a source of fluctuating direct current the sections being so connected together that the induced currents can have no effect in actuating the diaphragm of the instrument. It is of course necessary so to design the instrument that the value of the induced currents in either section are equal.

The invention consists of the parts and the construction and combination of parts as hereinafter more fully described and claimed, having reference to the accompanying drawings, in which:

Figure 1 is a diagrammatic view of the instrument in cross section. Fig. 2 is a diagrammatic view in cross section of a variation. Fig. 3 shows in diagrammatic view a further variation in the application of the principle.

Referring to Fig. 1, we have shown the telephonic conductor wound in two sections 2 and 3, each of said sections consisting of substantially annular coils of many turns of insulated wire. Each of the annular coils is disposed to be freely movable in the respective air-gaps of the magnets 4 and 5. These magnets consist respectively of the central poles 6 and 6′, substantially surrounded by the poles 7 and 7′; the center poles being separated from the outer poles by the substantially annular air-gaps 8 and 8′.

The magnets are energized by current flowing through the magnet coils 9 and 10. These magnet coils are properly connected together and energized from the same source of current.

The magnets 4 and 5 with their respective telephonic coils 2 and 3 are disposed on opposite sides of the diaphragm 11 to which the telephonic coils are rigidly connected by the arms 12 and 12′. The diaphragm 11 is contained in the sound-box 13 from which listening tubes 14 and 14′ extend, one from either side of the diaphragm 11.

The telephonic coils 2 and 3 are so connected together electrically that when telephonic current passes through them, and the magnets 4 and 5 are energized, the effect upon the diaphragm 11 will be additive. Now, if the coils 2 and 3 are properly connected together to produce an additive effect upon the diaphragm, it can be shown that induced currents formed in the coils 2 and 3 by any variation of the lines of force in the air-gaps 8 and 8′, due to fluctuations of the energizing current, will be neutralized by their mutual action, as hereinbefore described.

Referring to Fig. 2, we show a form of the instrument in which only one energizing coil 9 is used to produce the magnetic fields in the air-gaps 8 and 8′. The telephonic coils 2 and 3 are disposed respectively in the air-gaps 8 and 8′ and are connected to the diaphragm 11 by the rigid arms 12 and 12′. In this form of the invention one of the coils is connected to the diaphragm 11 by the arm 12′ which extends through the central pole piece 6. The coils 2 and 3 are connected together electrically to produce an additive effect upon the diaphragm when telephonic current passes through them. When so connected together it will be found that any fluctuation of the lines of force in the air-gaps 8 and 8′ will produce induced currents in the coils 2 and 3, which will neutralize each other.

Referring to Fig. 3, we have shown the telephonic conductor in two sections 2 and 3, each of which is subjected to the effect of magnetic fields energized by the same current. The coil 2 consists of a substantially annular coil disposed to be freely movable in the air-gap 8 and is connected by the rigid arm 12 to the diaphragm 11. Coil 3 of the telephonic conductor is subjected to the influence of the magnetic field produced by the energizing coil 10. The lines of force in the air-gap 8 are produced by the energizing coil 9. Current from the same source is used to energize both coils 9 and 10.

The inductive relation between the coil 3 and the magnetic field produced by coil 10 is variable by movement of the coil 3 in relation with the magnetic coil 10. Since the two energizing coils are fed by the same source of current, the magnetic fields produced by them will be subjected to the same variations.

The telephonic coil 2 is connected electrically to coil 3 so that induced currents formed by any variation of the field strength of their respective magnetic fields will neutralize each other. The strength of the induced current in coil 3 may be varied to exactly balance the induced current formed in the coil 2, by changing the inductive relation of coil 3 with respect to the magnetic field produced by the energizing coil 10.

Having described our invention and the manner in which the same is to be used, we claim and desire to secure by Letters Patent:

1. In a telephone receiver of the moving coil type including magnetic fields energized by direct current, means for eliminating the disturbing effect of fluctuations of said direct current, said means comprising a conductor, of which said moving coil forms a part, said conductor adapted to be included in the telephone circuit, said conductor being wound in two separate sections, said sections of conductor being respectively subjected to the influence of magnetic fields energized from the same source of current, said two sections of conductor being so electrically connected together that fluctuations of said energizing current are rendered negligible throughout the conductor as a whole.

2. In a telephone receiver of the moving coil type, said receiver including a magnet provided with a substantially annular air gap in which is maintained an intense magnetic field, said magnetic field being produced by direct current flowing through an energizing coil on said magnet, a substantially annular coil disposed to be freely movable in said air gap, said coil attached by a rigid arm to a diaphragm, and means for eliminating the disturbing effect of fluctuations of the direct current energizing said magnet, said means comprising a compensating conductor wound as a coil, said coil being connected electrically in series with said annular coil, and so disposed in a separate magnetic field energized by said direct current that induced electro-motive forces formed in said annular coil by variations of the energizing current are at any instant of

time opposed by equal and opposite electromotive forces in said compensating conductor as hereinbefore described.

3. In a telephone receiver employing magnets energized by direct current, means for eliminating the disturbances in said receiver due to fluctuations of strength of said direct current, said means comprising a conductor wound in two separate sections, said sections being subjected respectively to magnetic fields energized from the same source of current, at least one of said sections being in operative relation with the receiver, and said sections being so electrically connected together that the effects of fluctuations of the energizing direct current are rendered negligible throughout the conductor as a whole.

4. In a telephone receiving instrument, the combination with magnetic fields energized by direct current, of a conductor, said conductor adapted to be included in a telephone circuit, said conductor consisting of more than one section, said sections of conductor respectively subjected to the influence of said magnetic fields, said sections of conductor being so connected together electrically that effects of fluctuations of strength of said magnetic fields are rendered negligible in said conductor, a portion of said conductor being connected by a rigid arm to a diaphragm as hereinbefore described.

In testimony whereof we have hereunto set our hands in the presence of two subscribing witnesses.

EDWIN S. PRIDHAM.
PETER L. JENSEN.

Witnesses:
JOHN H. HERRING,
CHARLES PICKLES.

PLAINTIFFS' EXHIBIT NO. 32. 572-573
(Diagram Current Path in Audio Amplifier Output Circuit, Plaintiff's Patent).
This Exhibit referred to in testimony in suit "Dubilier Condenser Corporation, et al., vs. Radio Corporation of America in the District of Delaware".

32

CURRENT PATH IN AUDIO AMPLIFIER OUTPUT CIRCUIT

Nov. 9, 1926. 1,606,212

F. W. DUNMORE ET AL

POWER AMPLIFIER

Filed March 9, 1922

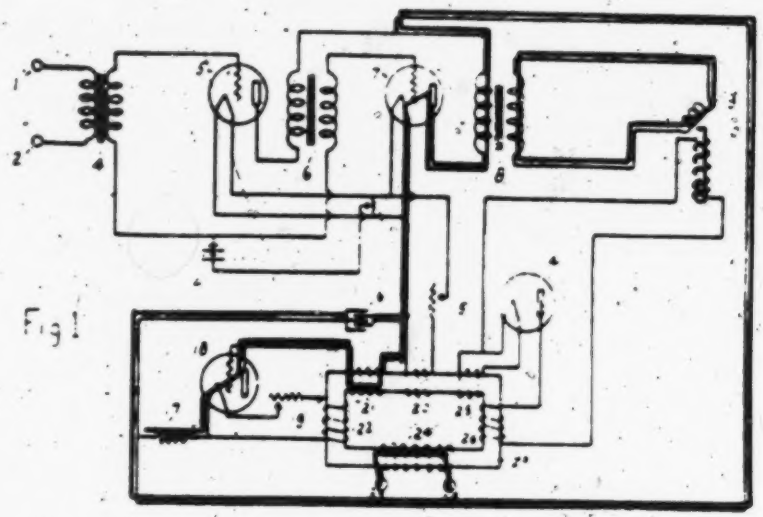

Fig 1

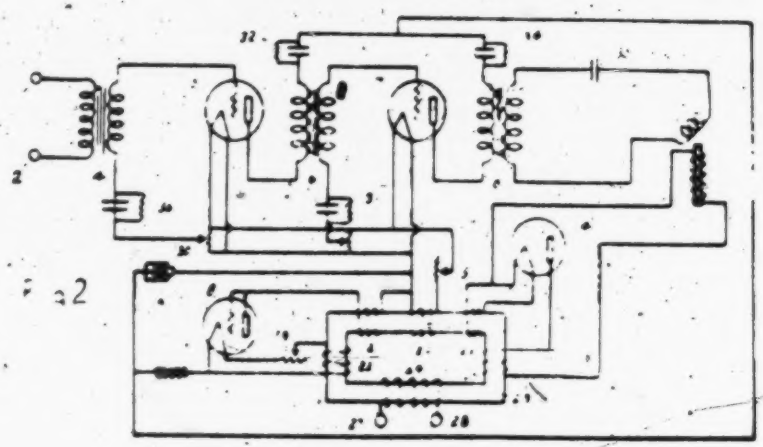

Fig 2

Frances W. Dunmore
Percival S. Lovell
By John B. Brady

PLAINTIFFS' EXHIBIT No. 33.
(Diagram Neutralization of hum in Output Circuit, Plaintiffs' Patent) -- Referred to in testimony in suit "Dubilier Condenser Corporation, et al., vs. Radio Corporation of America in the District of Delaware".

NEUTRALIZATION OF HUM IN OUTPUT CIRCUIT.

Plaintiffs' Exhibit No. 33

H. C. Mathews
Clerk

Nov. 9, 1926. 1,606,212

F. W. DUNMORE ET AL

POWER AMPLIFIER

Filed March 21, 1922

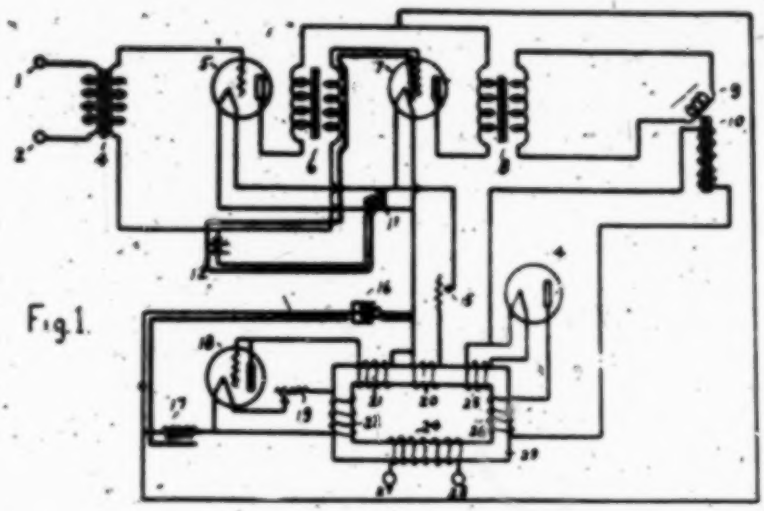

Fig. 1.

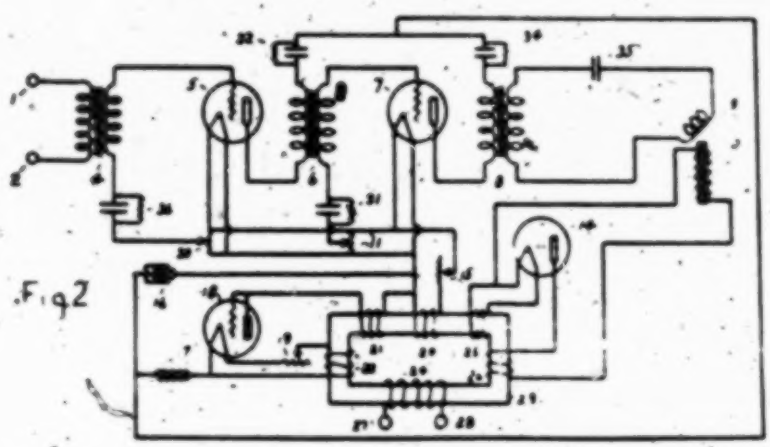

Fig. 2

Francis W. Dunmore
Percival D. Lowell
By John B. Brady

576–577

PLAINTIFFS' EXHIBIT No. 34.
(Diagram Current Path for field winding Plaintiffs' Patent) -- Referred to in testimony in suit "Dubilier Condenser Corporation, et al., vs. Radio Corporation of America in the District of Delaware."

Plaintiffs Exhibit No. 34
H.C. Mach
Clerk

CURRENT PATH FOR FIELD WINDING

Nov. 9, 1926. 1,606,212

F. W. DUNMORE ET AL

POWER AMPLIFIER

Filed March 21, 1922

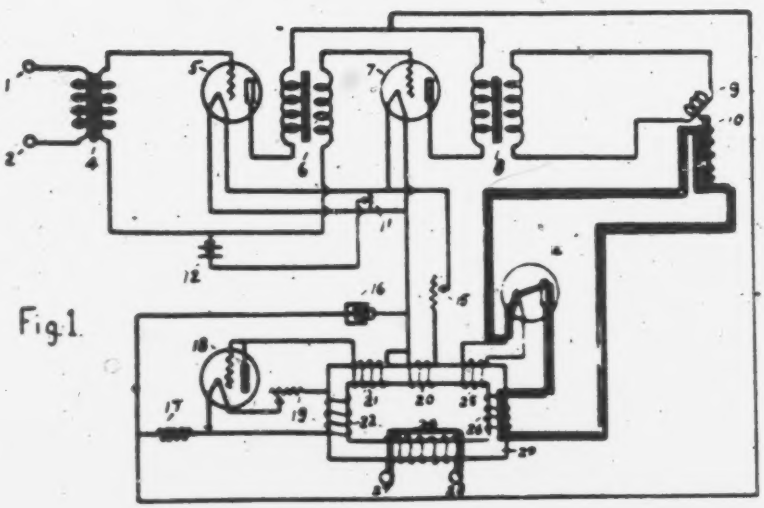

Fig. 1.

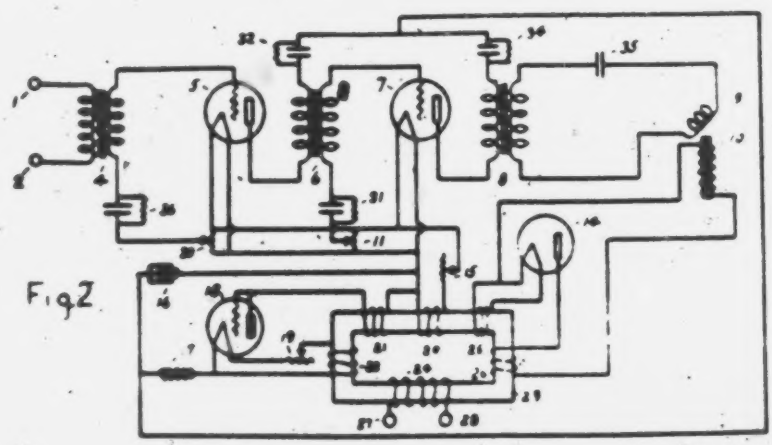

Fig. 2.

Frances W Dunmore
Pearal D Lovell
By John B Brady

PLAINTIFFS' EXHIBIT NO. 35.
(Diagram Neutralization of Hum in Field Winding Circuit, Plaintiffs' Patent) -- Referred to in testimony in suit "Dubilier Condenser Corporation, et al., vs. Radio Corporation of America in the District of Delaware".

578- 579

Plaintiffs Exhibit No. 35
H C Madsen
Clerk.

NEUTRALIZATION OF HUM IN FIELD WINDING CIRCUIT

Nov. 9, 1928. 1,606,212

F. W. DUNMORE ET AL

POWER AMPLIFIER

Filed March 21, 1922

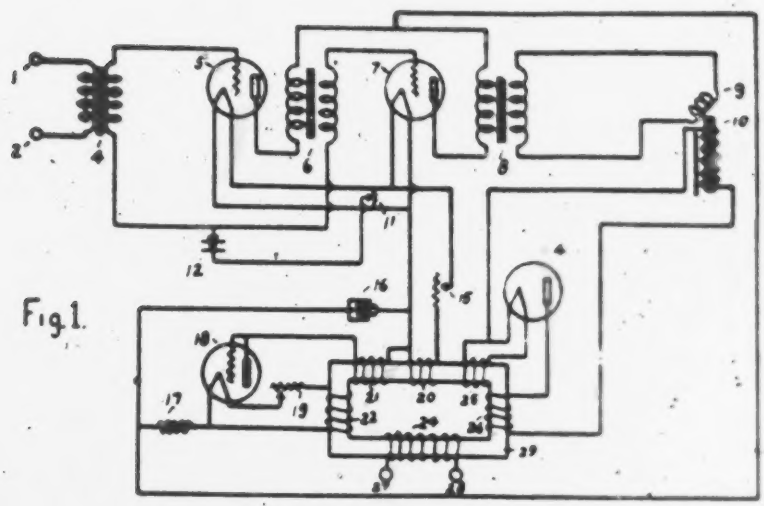

Fig. 1.

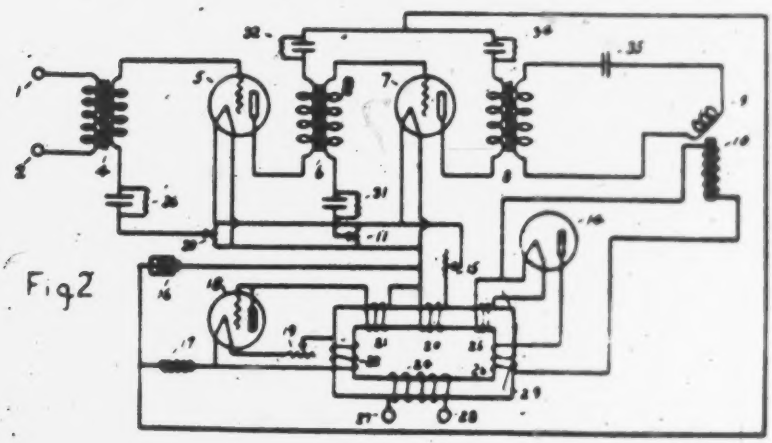

Fig. 2

Inventors

Francis W. Dunmore
Percival D. Lowell
By John B. Brady
Attorney

PLAINTIFFS' EXHIBIT NO. 36.
(Diagram Circuit Defendant's Loudspeaker 104)
Referred to in testimony in suit "Dubilier Condenser Corporation, et al., vs. Radio Corp. of America in the District of Delaware.

Plaintiffs' Exhibit No. 36

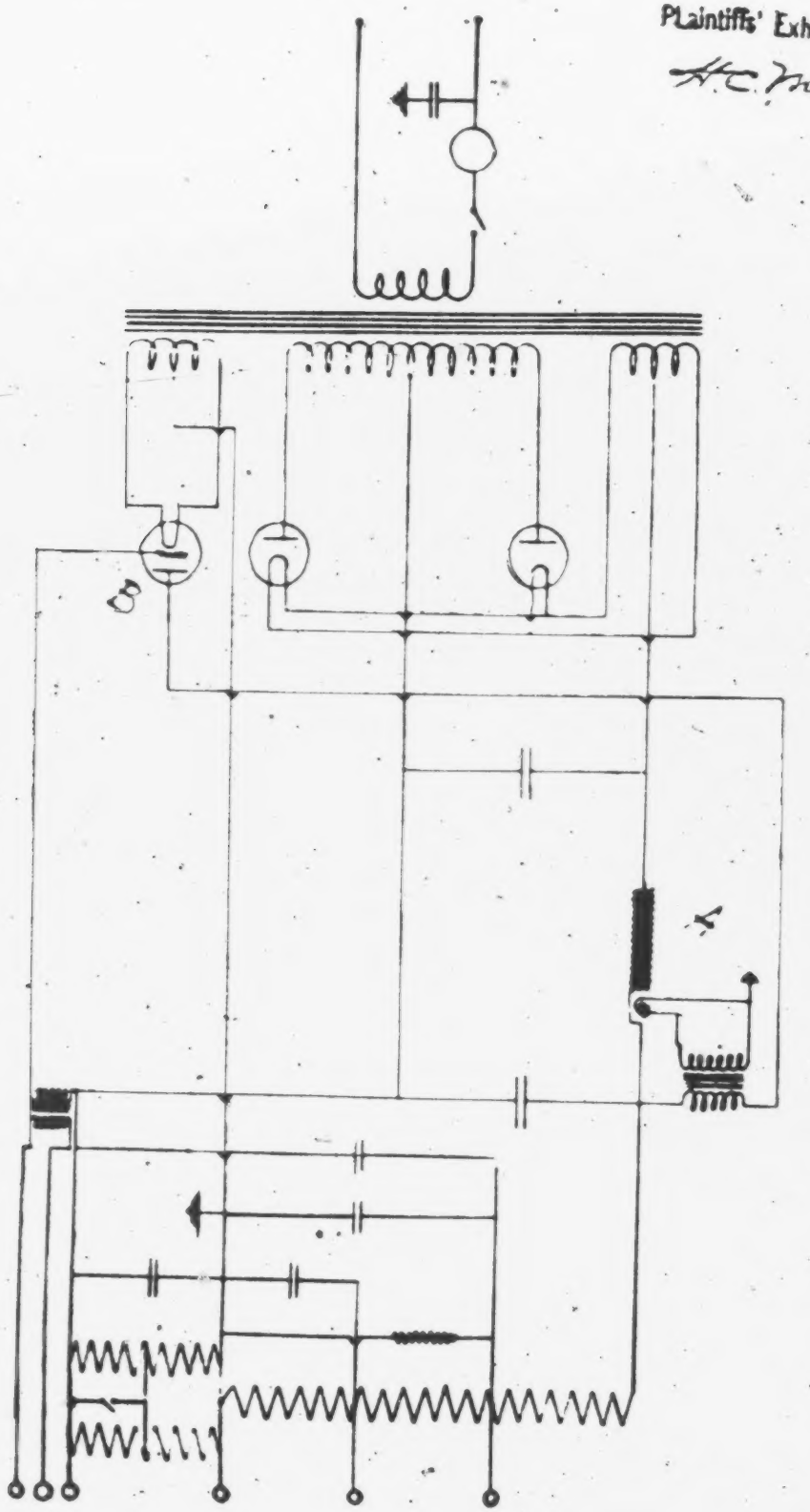

582 - 583

PLAINTIFFS' EXHIBIT NO. 37,
(Diagram Loudspeaker 104 Current Path in Audio Amplifier Output Circuit). Referred to in testimony in suit "Dubilier Condenser Corporation, et al., vs. Radio Corp. of America in the District of Delaware.

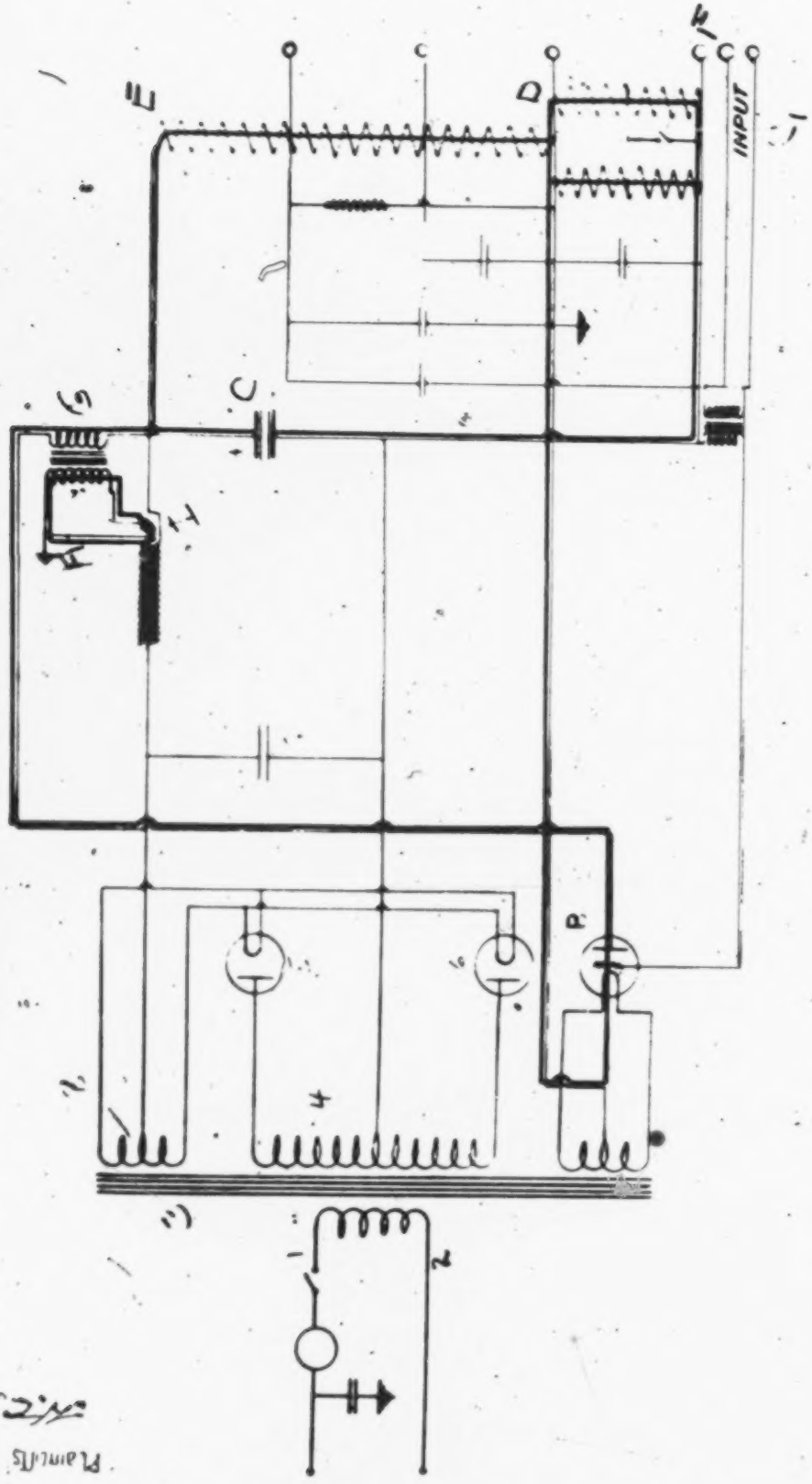

LOUD SPEAKER #104
CURRENT PATH IN AUDIO
AMPLIFIER OUTPUT CIRCUIT.

Clerk

PLAINTIFFS EXHIBIT No. 37

584- 585

PLAINTIFFS' EXHIBIT NO. 38,
(Diagram Defendants' Loudspeaker 104 Neutralization of Hum in Output Circuit). Referred to in testimony in suit "Dubilier Condenser Corporation, etal., vs. Radio Corp. of America in the District of Del.

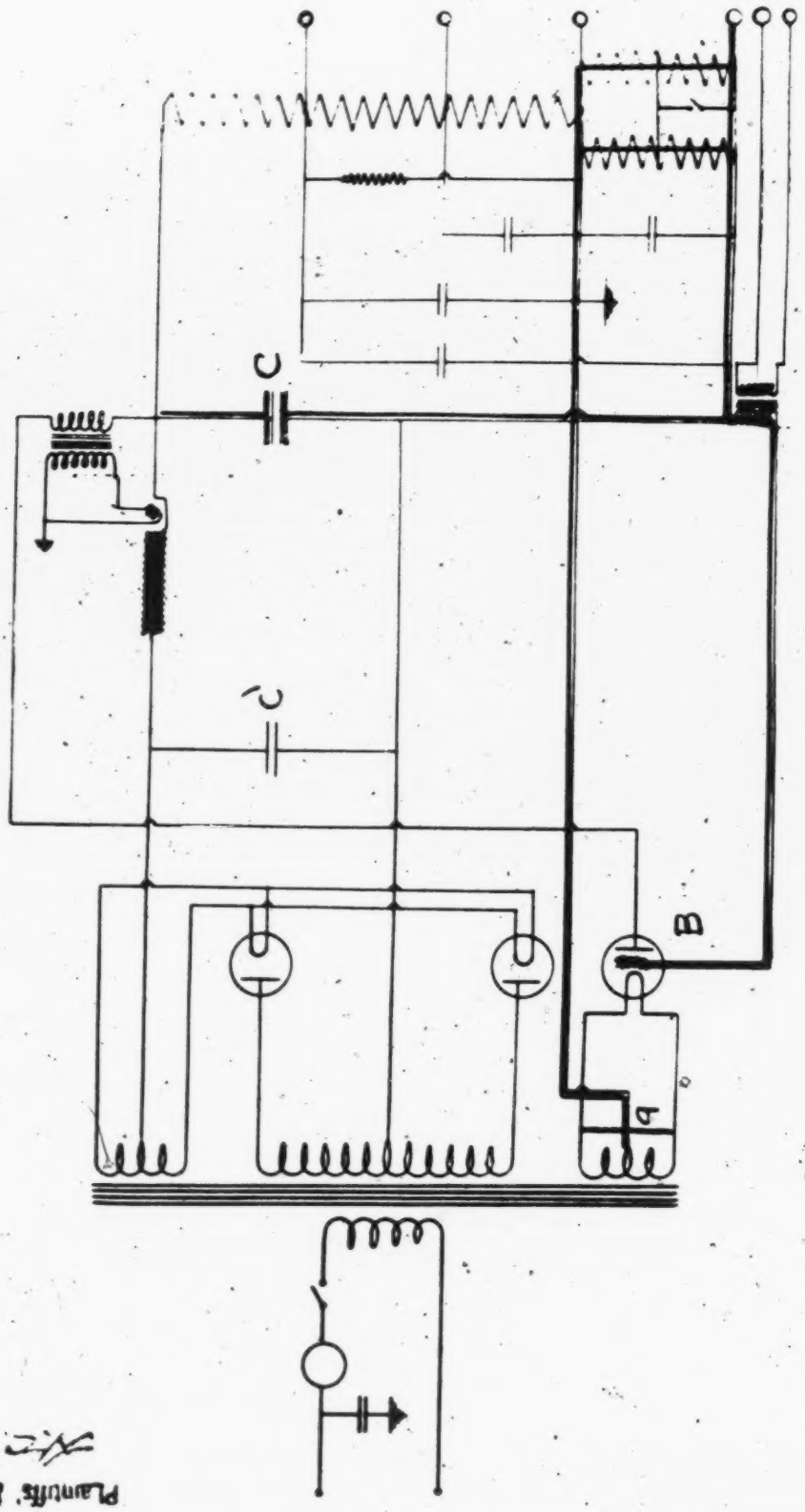

LOUD SPEAKER #104.
NEUTRALIZATION OF HUM
IN OUTPUT CIRCUIT.

Plaintiffs' Exhibit No. 38

PLAINTIFFS' EXHIBIT NO. 39.
(Diagram Defendant's Loudspeaker Current Path to Field Winding). Referred to in testimony in suit "Dubilier Condenser Corporation, et al., vs. Radio Corp. of America in the District of Delaware".

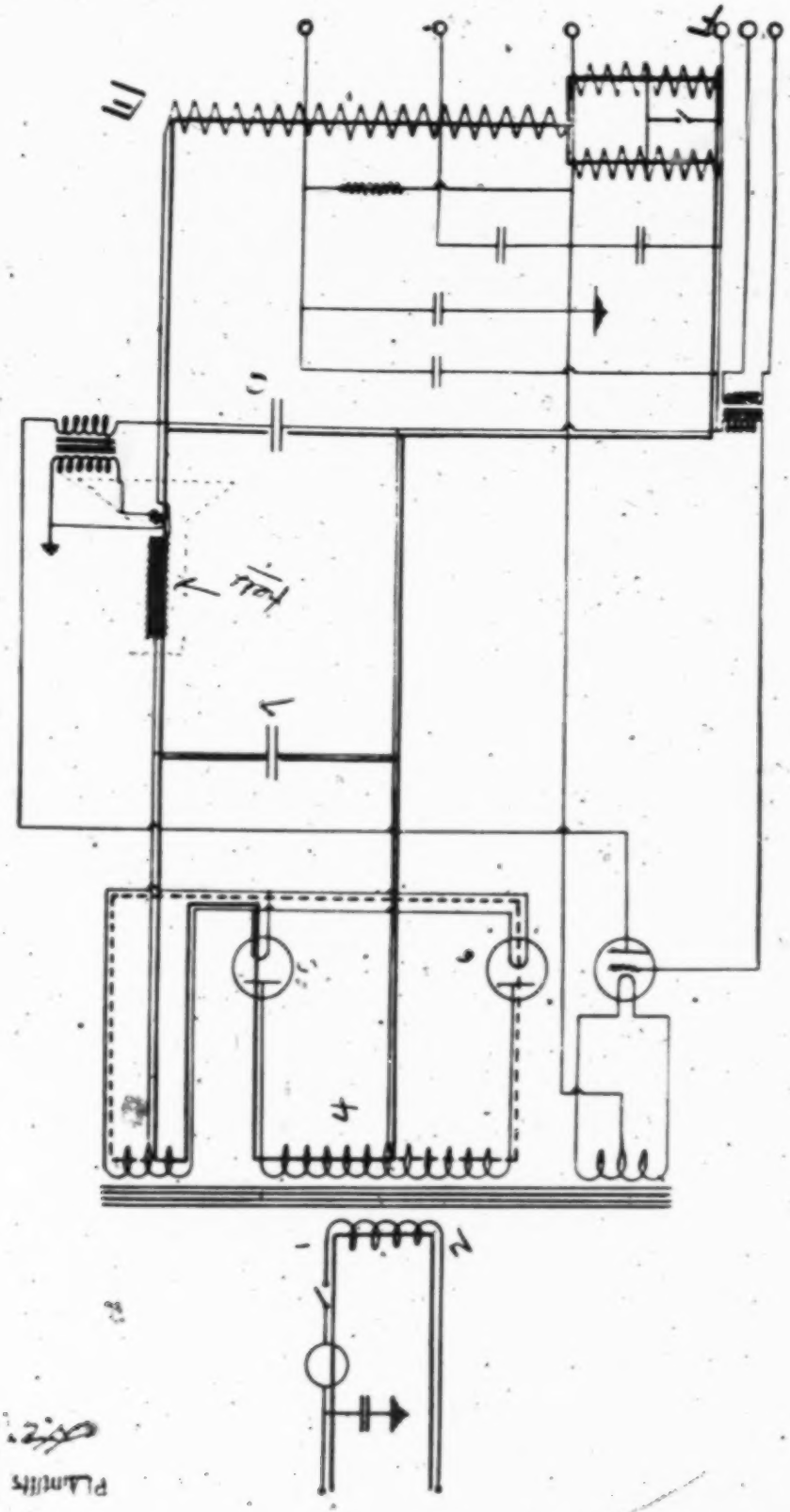

Plaintiffs Exhibit No 39

PLAINTIFFS' EXHIBIT NO. 40.
(Diagram Defendant's Loudspeaker 104, Neutralization of Hum in Field Winding Circuit) Referred to in testimony in suit "Dubilier Condenser Corporation, et al,, vs. Radio Corporation of America in the District of Delaware.

588 — 589

Plaintiffs Exhibit No 40

H.C. [illegible]
Clerk

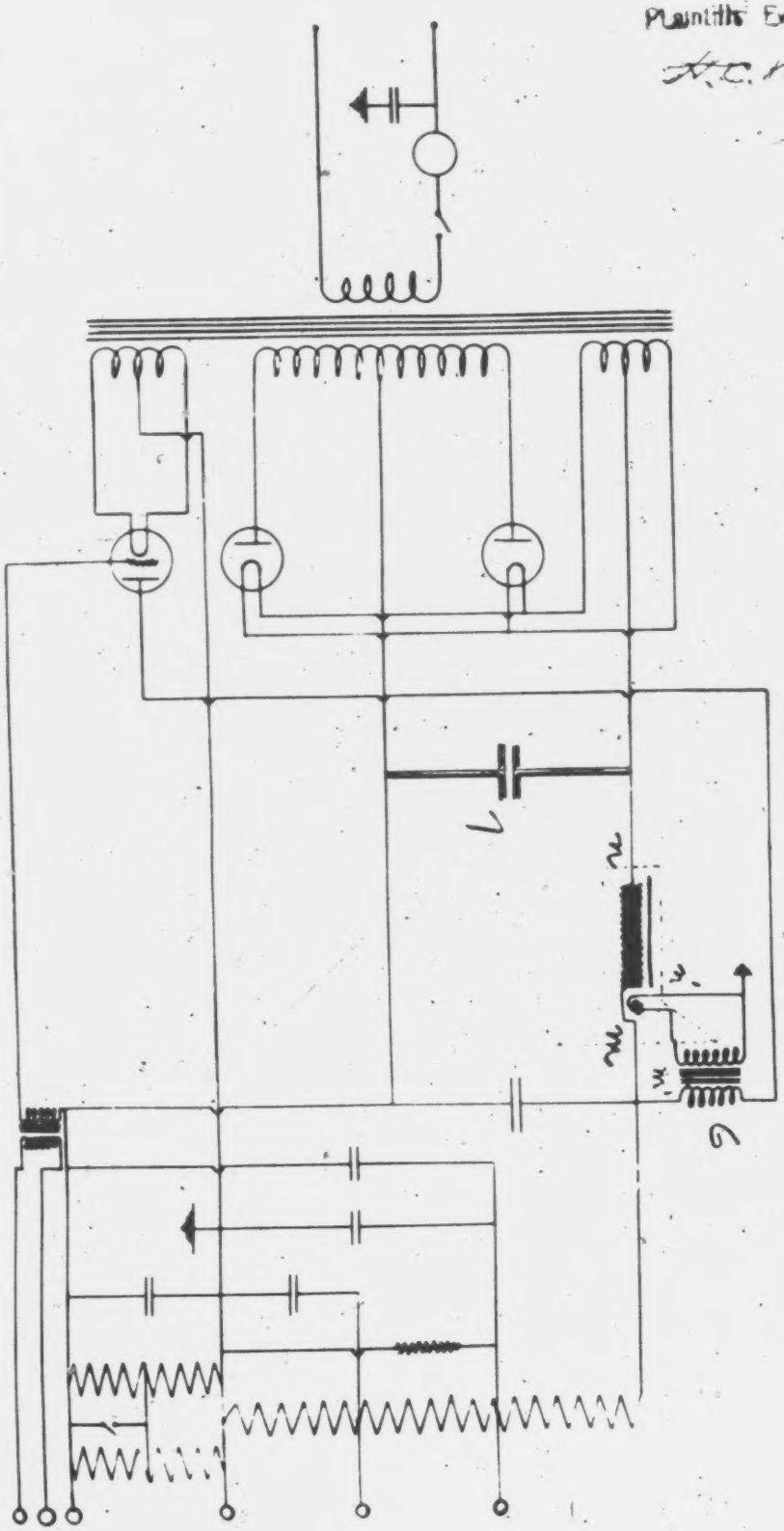

LOUD SPEAKER #104
NEUTRALIZATION OF HUM
IN FIELD WINDING CIRCUIT

DEFENDANT'S EXHIBIT No. 77, Sheet 1.
(Electrical Experimenter, Nov. 1919, pp. 636, 684, 686, 688, "Church Sermon Heard over One-half Mile".

804

590— 591

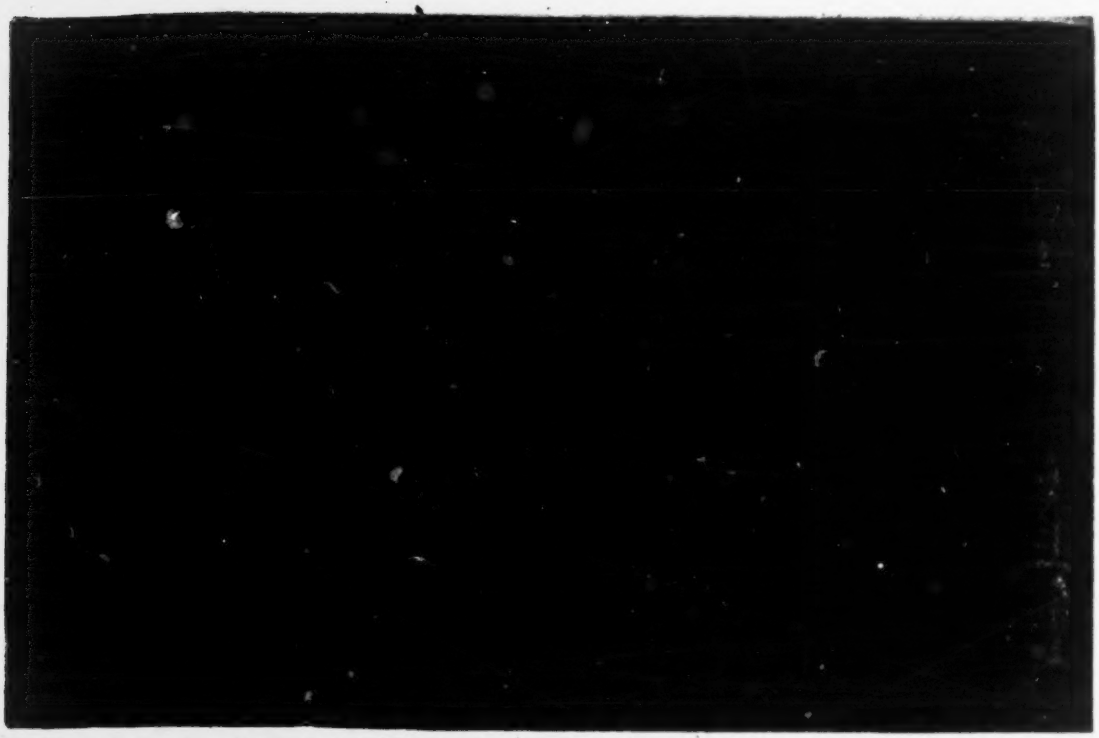

Recently, in the City of Washington, D. C., a Minister Had the Satisfaction of Broadcasting His Voice Over an Area One Mile in Diameter. His Sermon, Also the Choir and Organ Music, was Thus Heard One-half Mile Away from the Church, Thanks to the Magnavox, the Wonderful Sound Amplifier. People Eight Miles Away Heard the Voice, and it Worked One and One-half Miles Heavierward to an Airplane Flying Overhead.

Church Sermon Heard Over One-Half Mile

HAVE you ever been in the country on a quiet Sabbath morning and endeavored to note how far away from a church you could hear the minister's voice,—or for that matter, the choir singing, or the organ? Not very far you will say, if you have ever tried it. But in Washington, D. C., recently, a minister had the satisfaction of speaking to more people than any other minister, possibly, in church history. His voice, as well as the singing of the choir and the organ music, were amplified to such a tremendous volume, thanks to the newest electro-mechanical amplifier, known as the Magnavox—that the sermon was clearly audible over a circle whose diameter measured one mile, or over an area having a radius of about one-half mile. The Magnavox amplifier, which has been described several times in recent numbers of this journal in connection with public speaking events, was used on the present occasion in connection with a vacuum tube or audion amplifier, which is connected to the microphones and horns; these gathered the sounds of the minister's voice and the choir singing, in the manner here illustrated. The microphones, or sound detectors with the horns, were mounted as inconspicuously as possible about the pulpit and choral gallery, and concealed wires led to the large vacuum tube amplifier, shown in the accompanying illustration at the left. This was in turn connected up with wires and a suitable source of current, which led up to the belfries atop the two church spires, where there were placed on the outside of each belfry two of the Magnavox special amplifiers, fitted with large horns of the type shown at the left of the photograph just mentioned.

The minister spoke in an ordinary tone of voice, and in fact it was somewhat uncanny to be walking down a shady Washington street, when suddenly out of the very air above you, there came the command—"Thou shalt not steal!" in stentorian tones. Verily it sounded as if the prophets had come down to earth, and that the Day of Judgment had surely arrived. While it perhaps would not prove beneficial in a strictly ecclesiastical or religious sense to think of conducting our church services in such a broadcast manner as this, it would not seem a bad idea if in forthcoming years, our churches looked carefully into such matters, and considered the practice of broadcasting their pastors' sermons, organ and choral music by means of telephonic amplifiers, which it would seem, would surely have a beneficial effect and would do no harm, that is certain. Talking on the lighter side, there will probably be but one regret, and that will be on the part of the board of trustees of the church, which let us say has installed at some expense or other of these amplifying outfits. Mr. Stay-at-Home who is enjoying the sermon may make his remittance to the collection basket when His Reverence pronounces the all important words—"The usual Sunday offering will now be received," by contributing a weekly or annual amount for maintaining the equipment and its operating expense? If he heard the sermon.

General Layout of Amplifiers.

Two Magnavox loud-speakers are installed on the belfry of each tower of Trinity Church, corner "U" and Third Streets, Washington, D. C. A special three-step amplifier using a special combined audio and radio frequency circuit, is employed, so arranged that the output is 250 watts of voice modulated current. The input current can be any ordinary telephone current, radio, or the voice, spoken into special transmitters which are attached to the instrument.

Six volts are used on the filaments, and 300 to 600 volts are used on the plate circuits, depending on the volume of sound required. A special set of attachments are furnished, such as a minute transmitter utilizing a silk cord, which can be placed inside of a violin, cello, banjo, or other string musical instrument; also a small transmitter button can be attached to horned or other instruments. Any of these attachments will magnify the original instrument one hundred times by actual measurement.

In the church are installed special transmitters, one along each side of the pulpit, also one for each section of the pipe organ. These transmitters are equipt with papier-maché horns, 18 inches long and 14 inches at the opening of the bell. They will pick up a speaker's voice three to four feet away from the horn and reproduce it faithfully.

Preliminary tests were made with an ordinary watch ticking one of the transmitters, and with the three-step amplifier, the ticking of this watch was heard two blocks away thru normal street traffic. Pipe organ music, choir singing and special solo pieces

(Continued on page 684)

Who wants to be a good Boxer?

Suppose you are walking with your mother, sister, or best girl, and someone passes a slighting remark, won't you be ashamed if you cannot take her part? Well, can you?

Or suppose you remonstrate with a man for striking a smaller man, and the bully turns on you. Can you hold your own? Wouldn't you like to?

Or, if one of your pals says, "Come, put on the gloves and have some fun," can you do it, and get any "fun" out of it?

Less than 2 per cent of all men and boys know anything about the art of self-defense. That means when the test comes, less than 2 per cent are ready. Wouldn't you like to learn to box easily and quickly at half the usual cost?

Marshall Stillman has developed a unique "Shorthand Method" of teaching Boxing. You can learn the fundamentals in six lessons and can outbox older and stronger opponents after two weeks' study. His original principle has enabled him to teach professional boxers difficult blows and guards they could not learn by the old method. Professor Mike Donovan, former middle-weight champion of the world, who taught for thirty years at the New York Athletic Club, endorsed this "Shorthand Method," and helped prepare the lessons we send you. Boxing instructors and Y. M. C. A. physical directors are taking the course to use in their own work. Thousands of men and boys in this country and Canada,—boys as young as 12 and 15, and men as old as 50 and 60 have taken the course both for the boxing instruction and to keep in good physical condition and develop confidence and self-reliance.

It is the first time boxing has been successfully taught by mail, and it is only possible because Marshall Stillman starts with movements you are familiar with—holding out your hand for a coin, the breast stroke in swimming, etc. The first thing you know, he has led you into striking correct blows with both hands, putting the body weight behind them, guarding, ducking, feinting, etc. He teaches you the rudiments in front of your own mirror, before you face your first opponent. When you finally meet an opponent, you know how to hit him, what to expect in return, and how to guard against it.

The special introductory price of the new Home Study Edition is less than you would pay for a single term of lessons by the old method. We will include, until further notice, "Three Rounds of Shadow Boxing," 8 Jiu-Jitsu, or bone-breaking holds and releases, and 8 holds in standing wrestling, how to disarm a man, how to get out of dangerous holds, how to guard against a kick for the stomach, etc., and also a complimentary copy of Mike Donovan's famous book "The Science of Boxing." There are 175 illustrations in the course.

Frankly you don't believe that you can learn all these things by mail, do you? All right, we will take you on your own ground, we will send the course on 5-day approval, with the understanding that if you keep it you pay $5, but if you do not want it, you can return it on the fifth day, and end the matter. Simply fill in the coupon—we will do the rest.

Free Approval Coupon

MARSHALL STILLMAN ASSOCIATION
Suite E-11, No. 461 Fourth Ave., New York

You may send me at your risk, on 5-day approval, the complete Marshall Stillman "Shorthand Method" of Teaching Boxing, [illegible] the [illegible] described above. I agree [illegible] return the lessons on the fifth day after receiving same, or else send you $5, [illegible] payment for the coupon [illegible]

Church Sermon Heard Over One-Half Mile

(Continued from page 636)

played on the violin could be heard easily for *half a mile*. Preaching from the pulpit can be heard distinctly for the same distance.

N. Burglund, radio and electrical engineer of the concern manufacturing the Magnavox. Referring to the diagram herewith we see that this remarkable sound-reproducing instrument is of the [illegible]

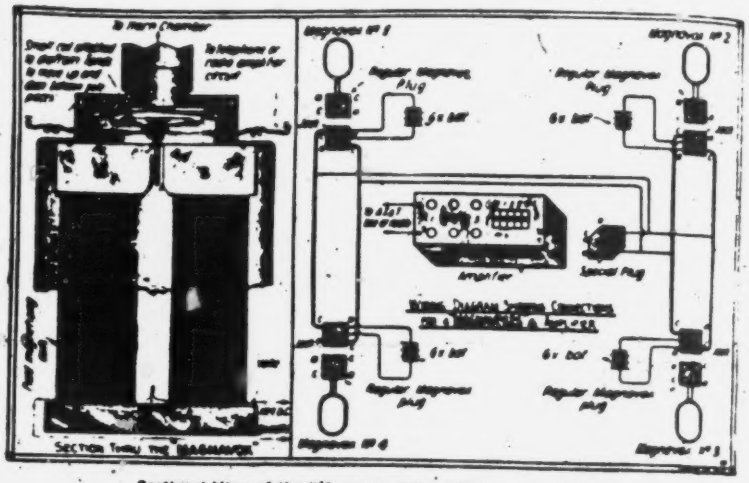

Sectional View of the "Magnavox" Loud-Talking Amplifier.

This installation was a special test conducted by the Signal Corps, U. S. Army, under the personal supervision of Dr. B. W. Burglund.

The amplifier is so constructed that one, two or three steps may be used. The cam switches on the Bakelite panel are as follows: M, master switch, controlling all currents; 1, 2 and 3 are respectively steps of amplification; R, special switch for "cutting in" a radio winding into the first step and cutting out the voice transmitter. Two binding posts are provided for attachment to any radio detector or telephone circuit.

In the circuit diagram are shown the four Magnavoxes (two for each tower) and a small 6-volt storage battery for exciting the magnetic fields of each Magnavox. This is not necessary unless the Magnavoxes are so far away from the amplifier that the drop of voltage would seriously weaken the fields.

For the sake of portability, special plugs are furnished for connecting to storage battery transmitters and plate battery (6 volts). They are not shown in diagram but attach to the front of the amplifier.

Description of the Magnavox Reproducer.

The [illegible] mechanism of the Magnavox reproducer are available thru the courtesy of Dr. B.

type, and in this respect differs from the usual telephonic devices intended for reproduction of speech. The ordinary telephone receiver operates on the electromagnetic principle, wherein variations in the magnetic field act upon a flat iron diafram about two inches in diameter, causing the diafram to be attracted and repelled alternately, so as to cause it to vibrate. The vibrations of the diafram in the well-known manner give rise to air vibrations corresponding to the originating voice waves at the transmitter end of the circuit.

In the Magnavox, the principle is *electrodynamic*, and the diafram is not acted upon directly by the magnetic flux from the electro-magnet. Instead, a minute insulated wire coil is placed in a small air gap about [illegible] inch long between the pole-

(Continued on page 686.)

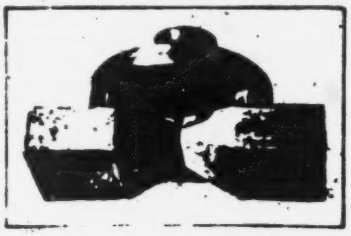

View Showing Pole Pieces and Diafram of the Magnavox Sound Amplifier. The Diafram Coil Lies Between the Pole Pieces

Handy Binder

for the Electrical Experimenter.

Holds and preserves 12 [illegible] be inserted or removed at [illegible] keep your magazines [illegible] preserve them like new [illegible] neatly. Made of heavy material [illegible] strongly reinforced at the back and covered with handsome [illegible] suitably lettered in gold.

65c

Add postage for 2 lbs.

Experimenter Pub. Co., Inc. [illegible] 233 Fulton St. N.Y.

DEFENDANTS' EXHIBIT No. 77, Sheet 3

BATTERY CHARGED AT HOME

Be it yourself. Save money and keep battery at highest efficiency by getting a

NEW F-F BANTAM BATTERY BOOSTER

This 5 ampere rectifier charges any 6 volt storage battery from 100 to 130 volts 60 cycle, Alternating Current Lamp Socket and at an expense equal to burning an electric lamp for a few hours.

Simple—safe—save acting. Infallible and long wearing carbon electrodes rectify the current. This new F-F rectifier already wonderfully popular—light in weight—10 lbs. complete ready for shipment—includes ammeter and battery clips. Get one and enjoy immunity from battery troubles.

Quick deliveries by Express. Per parcel post include postage and insurance charges.

$15

Ask for Circular No. 13

THE FRANCE MANUFACTURING CO., Cleveland, Ohio

MODEL AIRPLANE SUPPLIES

Build and fly Model Airplanes

Send 5¢ for catalog containing complete and knocked-down scale models of new machines, parts, fittings and supplies.

Wading River Mfg. Co. 972 Broadway Brooklyn, N.Y.

Church Sermon Heard Over One-half Mile

(continued from page 664)

pieces of the powerful electro-magnet, which pole-pieces are magnetized North and South, as shown in the accompanying drawing. No permanent magnets are used in its make-up. As the fluctuating or alternating currents from the microphone at the distant end of the circuit (or else the oscillatory audio-frequency currents coming from an audion amplifier) are sent thru this small coil attaching to the diafram, the coil is acted upon by the powerful magnetic field between the pole-pieces in such a manner as to be either repelled or attracted alternately (up and down) in a rapid manner, and at a rate corresponding to the voice wave pulsations. The movements of the small coil are, of course, immediately communicated to the diafram, and it is attached firmly to the latter, and in turn the movements of this diafram set up powerful air waves which issue from the sound amplifier horn attached to the instrument, and which is shown in one of our photographs. The odd-shape of this horn has a special bearing on the acoustic quality and sonority of the sound waves its sponsors claim. The upright poles of the electro-magnet have one-inch round cores of annealed Norway iron, the pole-pieces and yoke members being of similar material. The magnetizing coils consume a very small amount of current, or about 25 watts, and they are supplied to operate on 6, 8 or 18-volt D.C. from battery, as desired or on 110 volts D.C.

Contrary to the general opinion, no noticeable effect is caused in these speech reproducers when the latter current is used, due to the *commutator ripple*, owing to the high impedance of the windings, which smoothes out the pulsation so that they are not noticeable at all. Another very interesting feature of the Magnavox, which its inventors have ascertained after careful research on the acoustics of the instrument, is the *diafram*. As is well known, no phonograph or talking machine with a small diafram can be capable of producing the full sonorous quality of the average voice, such as a baritone, and particularly the music from string or wind instruments of the medium or lower tonal register. This is because of the fact that the smaller the diameter of the diafram the higher the natural period or pitch at which the diafram will vibrate, the greater its diameter, within certain limits, of course, the lower the natural period or pitch of the diafram and the more quality will it give to the average class of music, especially vocal or instrumental reproductions in the baritone or base register, for example. So the experts who have designed the Magnavox found that wonderful results were obtained by using a large diafram; in fact, it measures three and one-half inches in diameter. The diafram is neither of iron nor mica, but of German silver, and, furthermore, it is not flat, but has a double curve groove or rib pressed into its surface a short distance from the outer perifery. This helps to stiffen the diafram, and together with the peculiar properties of the material with which it is made, also tends to nullify any effects of natural period vibrations of the diafram itself.

It may be imagined from what has been said before that the new sound, music and speech reproducer must be used with an audion or vacuum tube amplifier—but such is not the case at all. This reproducer

(Continued on page 688)

You benefit by mentioning the "Electrical Experimenter" when writing to advertisers.

$1.00 INEXPENSIVE ELECTRIC POWER $1.00

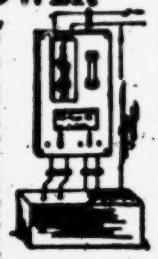

ELECTRIC LIGHT IN YOUR HOME $1.00

Our Guarantee—It is our intention that every article described above will reach you exactly as described, that it will satisfy you perfectly, that it represents full value for the money you paid or we will refund your money.

A. B. C. PRODUCTS CO. 8 JOHNSON & 13th Sts. CHICAGO

YOUR OPPORTUNITY

Canceled Government Contracts

This is Your Opportunity to buy new, guaranteed Electrical Apparatus of Standard Manufacture

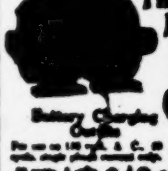

Battery Charging Outfits

$48.00
$68.00
$68.00
$94.00

1/2 H.P. $32.50

ALL MOTORS COMPLETE AS CUT

1/4 H.P. $18.50

VACUUM CLEANER MOTOR

WRITE FOR CATALOGUE. BARGAINS IN MOTORS AND GENERATORS. SPECIAL QUANTITY PRICES

NEW MOTORS

MANUFACTURERS' DISTRIBUTER

CHAS. H. JOHNSTON • West End • PITTSBURGH, PA.

"The Eastern" is a Large Achromatic Telescope

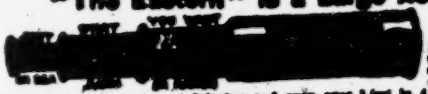

EASTERN NOVELTY CO., 67. 172 E. 93d STREET, NEW YORK.

Church Sermon Heard Over One-Half Mile

(Continued from page 686)

in itself possesses very remarkable amplifying properties and articulates the spoken word very beautifully. It has satisfied the most exacting test of the U. S. Signal Corps at Washington, as well as many experts of the Army and Navy Departments who have heard the instrument and tested it. The loud talker talks in a very loud and clear manner, with no vacuum bulb amplifiers attached. It is simply connected to a microphone, preferably a special microphone designed to be used with it, and comprising four standard microphone buttons connected in parallel, all enclosed in a single casing. In one test made with the instrument in this fashion, using a 12-volt battery current, a single reproducer was successfully employed to talk to 15,000 people, or covering a sound area equivalent to the average city block. In a test made at the Navy Department building at Washington, D. C., Dr. Burghead successfully transmitted the "tick of a watch" so as to be heard *one-half mile away* by experts who were listening for it. These tests proved very interesting, and also the manner of carrying them out. Dr. Burghead hooked up first one stage of a vacuum tube amplifier, and then successive stages. When he hooked on one amplifier he would ask then the Magnavox that the listeners stationed about one-half mile away lift their right arms to a horizontal position if they heard the voice clearly and distinctly, and to raise the arm vertically if they heard the voice extra loud and clear, which was the case when he connected two and three stages of vacuum tube amplifiers into the circuit with the Magnavox. The amplifying horn used in these different tests mentioned has been invariably a 24-inch quarter-sawed oak horn of the particular curved form as shown in the photograph of the instrument.

One of the most astounding features of the Magnavox is that, contrary to what the reader may at first believe, it is possible when the instrument is talking loudly to place the head directly into the horn with no uncomfortable feeling of having your ear drums shattered, or any rocking of the head, as is generally caused by a very loud sound, and at the same time you can walk away one-half mile and still hear the Magnavox talking to you clearly and loudly, and on a quiet day much farther than this. This instrument has many hundred uses, and one of the applications to which it is now being applied is for use on ship-board, and the ships being built by the U. S. Shipping Board are to be fitted with it for the purpose of giving orders from the officers' bridge, or chart house, to the engine room below decks. This has always been one of the most difficult features to install on any vessel, especially on war vessels, where it was imperative that orders should be accurately reproduced and heard at all times. Due to the peculiar construction of the balanced Magnavox microphone, which has found wide application in Aeroplane Radio telephony and the Magnavox itself, either of these instruments can be used where there is a perfect medium of noise, such as created by the turbine and dynamo running in the engine room, and the noise of other auxiliary machinery, without there being the least effect on the telephonic transmitting and reproducing qualities of the apparatus. In fact, in one instance, the Magnavox was fastened on the reduction gear case of a turbo-generator on a war ship. This, we must concede, is the acid test of any telephonic device

[fols. 598 & 599] DEFENDANTS' EXHIBIT No. 78

(Pridham and Jensen, U. S. Patent 1,105,924, Aug. 4, 1914, referred to in suit "Dubilier Condenser Corporation et al., vs. Radio Corp. of America, in District of Delaware)

This Exhibit is the same as Defendants' Exhibit "F" offered in the present case, and is incorporated in this Volume of Exhibits at page 566, etc.

DEFENDANT'S EXHIBIT No. 79,
(Simplified Schematic Diagram Radiola 28 connected to speaker, Model 104). Referred to in testimony in suit "Dubilier Condenser Corporation, et al., vs. Radio Corp. of America in Dist. of Delaware.

600-6

SIMPLIFIED SCHEMATIC DIAGRAM
RADIOLA 28 CONNECTED TO SPEAKER MODEL 104

○ Located in AC Package

DEFENDANT'S EXHIBIT NO. 80.
(Waterman Diagrammatic Sketch 104 Speaker Floating Coil Location). Referred to in testimony in suit "Dubilier Condenser Corporation, et al., vs., Radio Corp. of America in District of Delaware.

Defendant's Exhibit No 80.

H.C.M.

Clerk.

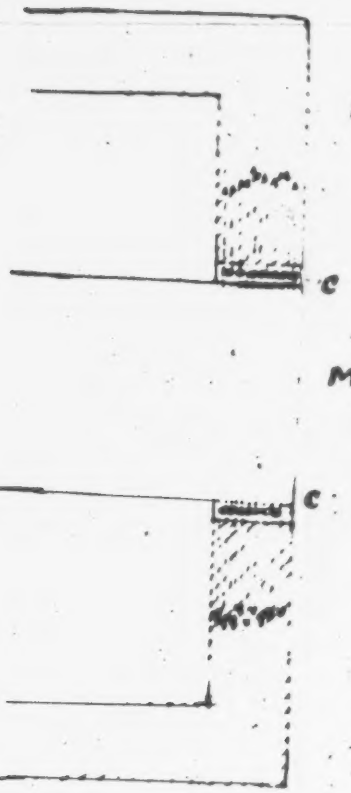

Diagrammatic Sketch
104 Speaker Floating
Coil Location

[fols. 604 & 605] Clerk's Certificates to foregoing record omitted in printing.

Endorsed on cover: File No. 39,942. U. S. Circuit Court of Appeals, Fourth Circuit. Term No. 388. A. G. Triplett, R. M. Triplett, A. Nelson, et al., petitioners, vs. Percival D. Lowell, Francis W. Dunmore, and Dubilier Condenser Corporation. Petition for writ of certiorari and exhibit thereto. Filed August 21, 1935. Term No. 388, O. T., 1935.

(7302-C)

CLERK'S COPY

CERTIFICATE

Supreme Court of the United States

OCTOBER TERM, 1935

No. 590

THE MANTLE LAMP COMPANY OF AMERICA

vs.

ALUMINUM PRODUCTS COMPANY.

ON CERTIFICATE FROM THE UNITED STATES CIRCUIT COURT OF APPEALS FOR THE SEVENTH CIRCUIT.

FILED NOVEMBER 16, 1935.

SUPREME COURT OF THE UNITED STATES

OCTOBER TERM, 1935

No. 590

THE MANTLE LAMP COMPANY OF AMERICA

vs.

ALUMINUM PRODUCTS COMPANY.

ON CERTIFICATE FROM THE UNITED STATES CIRCUIT COURT OF APPEALS FOR THE SEVENTH CIRCUIT.

INDEX.

	Page
Certificate from U. S. C. C. A., Seventh Circuit	1
Statement of facts	1
Questions certified	4
Judges' signatures	5
Clerk's certificate (omitted in printing)	5

JUDD & DETWEILER (INC.), PRINTERS, WASHINGTON, D. C., NOV. 19, 1935.

—7131-C

IN THE

United States Circuit Court of Appeals

FOR THE SEVENTH CIRCUIT.

No. 5412. OCTOBER TERM AND SESSION, 1935.

THE MANTLE LAMP COMPANY OF AMERICA, a corporation,
Appellant,
vs.
ALUMINUM PRODUCTS COMPANY, a corporation,
Appellee.

Appeal from the District Court of the United States for the Northern District of Illinois, Eastern Division.

Upon hearing and consideration of this appeal there have arisen certain questions of law whereon this Court is in doubt and desires the instruction and advice of the Supreme Court of the United States.

The relevant facts out of which such legal questions grow are:

United States Letters Patent No. 1,435,199, for a heat-insulated receptacle, were issued November 14, 1922, to the Mantle Lamp Company of America, the appellant, assignee of Lewis Van Deventer Blair, upon Blair's application therefor filed October 29, 1919.

On November 21, 1932, appellant brought suit under said patent in the District Court of the United States for the Northern District of Illinois, Eastern Division, against the appellee herein. The bill of complaint charged appellee with infringement of the said Blair patent, and demanded relief by injunction and accounting. Appellee answered setting up, *inter alia,* prior suits by appellant in the same circuit wherein claims of the Blair patent had been found and decreed invalid, and that

"9. The defendant further answering the bill of complaint avers that no disclaimer as required by the stat-

utes of the United States has been made and/or filed in the United States Patent Office, in connection with Blair Patent 1,435,199, as to claims 1, 4, 5, 6, 7, 10, 11, 12, 13, 14, 17, 18, 21, 22, 23 and 24 thereof which were held invalid by the United States Circuit Court of Appeals for the Seventh Circuit on May 28, 1927, in the case of *Macomb Mfg. Co.* v. *The Mantle Lamp Company of America,* Docket No. 3812, referred to in Section A of paragraph 8 hereof, and that because no disclaimer has been filed as aforesaid Blair Patent No. 1,435,199 is entirely invalid."

Upon hearing of the cause the District Court held and decreed claims 1, 3, 4, 5, 6, 7, 8, 9, 10, 11, 12, 13, 14, 17, 18, 21, 22, 23 and 24, whereon appellant relied, to be invalid for various reasons, among them for neglect to file within reasonable time disclaimers of the said claims of this patent which had been, in prior suits, held to be invalid by the United States Circuit Court of Appeals for the Seventh Judicial Circuit,[1] and decreed dismissal of the bill for want of equity, from which decree the pending appeal was taken.

On July 8, 1924, this appellant brought suit against Macomb Manufacturing Company in the District Court of the United States for the Southern District of Illinois, charging that defendant with infringement of certain claims of the said Blair patent; and upon the hearing of that cause the court found the claims there in issue, viz., claims 1, 4, 5, 6, 7, 10, 11, 12, 13, 14, 17, 18, 21, 22, 23 and 24, to be valid and infringed, and entered a decree accordingly, from which decree an appeal was prayed and allowed to the United States Circuit Court of Appeals for the Seventh Judicial Circuit.

In a suit brought October 2, 1924, in the District Court of the United States for the Northern District of Illinois, Eastern Division, the appellant herein was a party, and the said

---

1 Among the District Court's findings of fact are:

"37. The present suit was commenced on November 21, 1932, or over five years after the judgments rendered in the Macomb and Monarch suits.

"38. No disclaimer has been filed to date, a period of over six years, by The Mantle Lamp Co. of America as to any of the claims held to be invalid in the Macomb and Monarch suits.

"39. This delay of over five years in instituting this suit and six years to date in filing disclaimers to the claims held invalid in the Macomb and Monarch suits is unreasonable within the meaning of the disclaimer statutes, Sections 65 and 71, Title 35 U. S. C. A."

Among the District Court's conclusions of law is:

"6. Each of the claims of the Blair Patent is invalid for unreasonable delay and neglect in filing disclaimers to invalid claims."

Blair patent became involved by way of a counterclaim. The said District Court held the claims of the Blair patent there in suit, to wit, claims 1, 3, 4, 5, 6, 7, 10, 11, 12, 13, 14, 17, 18, 21, 22, 23 and 24, were valid and infringed and decreed accordingly, from which decree an appeal was prayed and allowed to the United States Circuit Court of Appeals for the Seventh Judicial Circuit.

The two appeals last above referred to were co-pending in the United States Circuit Court of Appeals for the Seventh Judicial Circuit and were there heard together; and on May 28, 1927, the Court filed opinions in both of the appeals holding the enumerated claims of the said Blair patent therein respectively involved to be invalid, and adjudging and directing that the decrees therein be reversed, and ordering dismissal, for want of equity, of the bill of complaint in the first of those appeals and dismissal of the counterclaim in the second. 22 F. (2d) 93 and 95.

No petition for certiorari was filed in either cause, and on December 5, 1927, the said Circuit Court of Appeals issued mandates to the respective District Courts in the said causes, whereupon the bill of complaint in the one and the counterclaim in the other were promptly thereafter dismissed, and these causes, so far as they involved the said Blair patent, were finally concluded.

On July 28, 1924, appellant brought a suit on said Blair patent in the District Court of the United States for the Western District of Missouri against Cutino Company, a customer or jobber of Monarch Company, Incorporated, and on January 3, 1928, a bill was brought in the District Court of the United States for the Northern District of Illinois, Eastern Division, by Monarch Company, Incorporated, et al., to restrain the prosecution of the said suit in Missouri. A motion for temporary injunction having been denied, an appeal was taken to the United States Circuit Court of Appeals for the Seventh Judicial Circuit, in which Court, on October 2, 1928, the decree of the District Court was reversed and a temporary injunction was ordered restraining appellant from prosecuting any suit against any customers of the Monarch Company, Incorporated.

On September 12, 1928, appellant brought suit for infringement of said Blair patent against the George H. Bowman Company in the District Court of the United States for the

Northern District of Ohio, and upon the hearing of said cause the claims there in issue, to wit, 1, 3, 4, 5, 6, 7, 9, 10, 11, 12, 13, 14, 17, 18, 21, 22, 23 and 24, were held invalid and the bill was ordered dismissed. An appeal was taken to the United States Circuit Court of Appeals for the Sixth Judicial Circuit, where, in an opinion filed November 3, 1931 (53 F. (2d) 441), that Court reversed the District Court as to claim 1 of the Blair patent, finding it to be valid and infringed, without prejudice to the remaining claims in suit. This appellant petitioned the Supreme Court of the United States for writ of certiorari, based upon conflict of opinion and decision respecting said patent between the two Circuit Courts of Appeals, which petition was denied March 14, 1932. 285 U. S. 545.

The questions concerning which this Court desires the instruction and advice of the Supreme Court are:

1. Where certain but not all of the claims of a patent are in suit, and all of the claims in suit are held and decreed to be invalid pursuant to a finding and judgment to that effect of the Circuit Court of Appeals of the circuit, may the owner of the patent maintain a suit afterward brought thereon in the same judicial circuit as that in which the first cause was decided, and against a different defendant not involved in the first suit—the second suit being based on the claims held in the prior suit to be invalid and on other claims of the same patent not previously adjudicated—where the owner of the patent wholly failed and omitted to file any disclaimer of the claims held in the first suit to be invalid, and where, between entry of decree of invalidity of the claims in the first suit and the bringing of the second suit in the same circuit, reasonable time had elapsed for filing such disclaimer?

2. If question 1 is answered in the affirmative, does the intervention of a period of approximately five years between the final judgment in the first suit and the institution in the same circuit of the second suit constitute delay so unreasonable as to bar the second suit for want of disclaimer of the claims which had been held to be invalid?

3. If question 2 is answered affirmatively, may the institution or pendency of other suits in another judicial circuit or circuits after entry of final decree in the first suit, based on claims of the patent so held invalid and on other claims thereof not previously adjudicated to be invalid, excuse the

failure to file disclaimer of the claims held invalid prior to instituting the later suit in the same circuit?

The Clerk of this Court is directed to transmit to the United States Supreme Court a certified copy hereof.

EVAN A. EVANS,
WILLIAM M. SPARKS,
SAMUEL ALSCHULER,
United States Circuit Judges before whom the appeal herein was heard and is pending in the United States Circuit Court of Appeals for the Seventh Judicial Circuit.

Chicago, Illinois,
October 30, 1935.

J-11577 The Gunthorp-Warren Printing Company, Chicago—10-31-35—50

FILE COPY

Office Supreme Court, U. S.
FILED
JAN 22 1936
CHARLES ELMORE CROPLEY
CLERK

IN THE

SUPREME COURT OF THE UNITED STATES

OCTOBER TERM, A. D. 1935

No. 590

THE MANTLE LAMP COMPANY OF AMERICA,

vs.

ALUMINUM PRODUCTS COMPANY.

ON CERTIFICATE FROM THE UNITED STATES CIRCUIT COURT OF APPEALS FOR THE SEVENTH CIRCUIT.

BRIEF OF APPELLANT.

GEORGE I. HAIGHT,
Attorney for Appellant.

W. H. F. MILLAR,
M. K. HOBBS,
Of Counsel.

CHICAGO LAW PRINTING CO., 111 N. WACKER DRIVE (COR. WASHINGTON ST.) TEL. FRANKLIN 6521

TABLE OF CONTENTS.

	PAGE
Brief of Appellant	1
Opinions Below	2
Jurisdiction	2
Statement of the Case	2
Questions Presented	4
The Statutes Involved	5
Introduction to Argument	5
Summary of Argument	9
Point I: All the material and substantial parts of the thing patented having been found to be invalid for lack of invention, there is no necessity for filing a disclaimer	9, 11
Point II: Continuous efforts of a patent owner to vindicate its assertion of validity, after a finding of lack of invention, makes unnecessary the filing of a disclaimer	9, 17
Point III: The Act of 1891 creating the Circuit Courts of Appeals contemplated finality of judgments and decrees for each Circuit without thereby binding all other Circuits. This has resulted in	

PAGE

diversity of opinion resolvable only in the Supreme Court and has been long recognized by the Supreme Court's practice in reference to patent causes 9, 26

Point IV:

A valid disclaimer cannot be made to eliminate elements of a patent for a combination 10, 30

The Certified Questions 31

Appendix A 35

Appendix B 47

Appendix C 54

Appendix D 56

Appendix E 67

CASES CITED.

Abercrombie & Fitch Co. v. Baldwin, 245 U. S. 198, 38 S. Ct. 104 24

Altoona Publix Theatres, Inc. v. American Tri-Ergon, Inc., 294 U. S. 477-492 ..... 6, 10, 14

Armstrong v. Toler, 11 Wheat. 258, (1826) 27

Brunswick, Balke, Collender Co. v. Klumpp, 131 Fed. 255 (C. C. A. 2) 9

Corona Cord Tire Co. v. Dovan Chemical Corporation, 276 U. S. 358, 48 S. Ct. 380 24

Clark v. Hoover, 51 Tex Cir. App. 181 28

PAGE

CASES CITED (CONTINUED).

Dahlgren v. Pierce, 270 Fed. 507, (appeal dismissed 256 U. S. 682; Certiorari denied, 256 U. S. 692) 27

Diamond Rubber Co. v. Consolidated Rubber Tire Co., 220 U. S. 428, 31 S. Ct. 444 24

Dowagiac Mfg. Co. v. Minnesota-Moline Plow Co., 235 U. S. 641, 35 S. Ct. 221 24

Ensten v. Simon, Ascher & Co., 282 U. S. 445; 51 S. Ct. 207 ..... 6, 9, 22

Expanded Metal Co. v. Bradford, 214 U. S. 366, 29 S. Ct. 652 24

Gill v. Wells, 89 U. S. (22 Wall.) 1 ..... 10, 30

Gelyscke v. Dubuque, 1 Wall. 221 (1863) 27

Hoe & Co. v. Goss Printing Press Co., 31 Fed. (2) 565 6

John E. Thropps Sons Co. v. Seiberling, 264 U. S. 320, 44 S. Ct. 346 24

McGuire v. Van Pelt, 55 Ala. 344 28

Meccano, Ltd. v. John Wanamaker, 253 U. S. 136, 40 S. Ct. 463 24

N. Y. C. R. Co. v. Gray, 239 U. S. 583 27

New York Scaffolding Co. v. Chain Belt Co., 254 U. S. 32, 41 S. Ct. 21 24

O'Reilly v. Morse, 56 U. S. (15 How.) 62 (1854) 25

PAGE

CASES CITED (CONTINUED).

Radio Corporation v. Radio Engineering Laboratories, 293 U. S. 1, 54 S. Ct. 752 24

Railroad Supply Co. v. Elyria Iron & Steel Co., 244 U. S. 285, 37 S. Ct. 502 24

Robinson on Patents, Sec. 643-645 ..... 9, 15, 16

Saranac Automatic Machine Corp. v. Wirebounds Patents Co., 282 U. S. 704, 51 S. Ct. 232 24

Supreme Ct., Revised Rules, Rule 38 30

Thompson v. Marshall, 36 Ala. 504 28

Trustees of Phila. Baptist v. Hart, 4 Wheat. 1 27

T. H. Symington Co. v. National Malleable Castings Co., 250 U. S. 383, 39 S. Ct. 542 24

U. S. v. Bradley, 10 Pet. 343, 9 L. Ed. 448 (1836) 27

U. S. v. Mora, 97 U. S. 413 27

Vance v. Campbell, 66 U. S. (1 Black) 427 ..... 10, 30

Winans v. N. Y. & Erie R. R. Co., 62 U. S. (21 How.) 88 ..... 9, 15

STATUTES CITED.

Act of 1891, Chap. 517, Sec. 6, 26 Stat. 828, as amended Sec. 128 of the Judicial Code, Title 28, U. S. C. A. 225 26

Judicial Code, Sec. 239, as amended by Act of Feb. 13, 1935 (U. S. Code Title 28, Sec. 346) 2

Revised Statutes, Sec. 4917, 35 U. S. C. A. 65 ..... 5, 9

Revised Statutes, Sec. 4922, 35 U. S. C. A. 71 ..... 5, 9

IN THE

SUPREME COURT OF THE UNITED STATES

OCTOBER TERM, A. D. 1935.

No. 590

THE MANTLE LAMP COMPANY OF AMERICA,

vs.

ALUMINUM PRODUCTS COMPANY.

ON CERTIFICATE FROM THE UNITED STATES CIRCUIT COURT OF APPEALS FOR THE SEVENTH CIRCUIT.

BRIEF OF APPELLANT.

This case is before this Court on a certificate from the United States Circuit Court of Appeals from the Seventh Circuit. The Mantle Lamp Company of America, the original plaintiff, was the appellant in the Circuit Court of Appeals and is so designated in this Brief.

OPINIONS BELOW.

The opinion of the District Court of the United States is not reported nor included in the certificate. So far as it is relevant to the questions certified by the Circuit Court of Appeals for the Seventh Circuit, the District Court's findings appear on page 2 of the Certificate. The Circuit Court of Appeals for the Seventh Circuit has filed no opinion pending instructions from the Supreme Court.

Of collateral interest in this proceeding is the opinion of the Circuit Court of Appeals for the Sixth Circuit in *The Mantle Lamp Company of America* v. *George H. Bowman Company,* reported in 53 F. (2) 441 (Appendix D); and the opinions of the Circuit Court of Appeals for the Seventh Circuit in *Macomb Manufacturing Company* v. *The Mantle Lamp Company of America;* (Appendix B) and *Monarch Company, Inc. et al.* v. *The Mantle Lamp Company of America,* (Appendix C) reported respectively in 22 F. (2) 93 and 95.

JURISDICTION.

The jurisdiction of the Court to entertain this certificate and proceeding and to decide the questions therein raised, rests upon Section 239 of the Judicial Code as amended by the Act of February 13, 1935 (U. S. Code, Title 28, Section 346).

STATEMENT OF THE CASE.

This is a patent case. It came to the Court of Appeals for the Seventh Judicial Circuit on appeal from the District Court for the Northern District of Illinois, Eastern Division, to reverse a decree dismissing the plaintiff's bill of complaint for want of equity. On this appeal the ques-

tion arose as to applicability of Sections 4917 and 4922 of the Revised Statutes relating to disclaimers. Relevant considerations drawn from the record are set forth in the certificate from said Circuit Court of Appeals on pages 1, 2, 3 and 4 thereof. Broadly, the facts are that appellant's Blair patent in suit, No. 1,435,199, for a Heat-Insulated Receptacle, issued November 14, 1922, had been found invalid by the Circuit Court of Appeals for the Seventh Judicial Circuit in two cases that were heard together. These two cases were *Macomb Mfg. Co.* v. *The Mantle Lamp Company of America* and *Monarch Company, Inc., et al.* v. *The Mantle Lamp Company of America.* The former was an appeal from a decree of the District Court for the Southern District of Illinois and the other an appeal from the District Court for the Northern District of Illinois. Both District Courts held the said Blair patent valid and infringed. The mandates in the *Macomb* case and the *Monarch* case went down to the District Court and a decree was entered therein after denial of Petitions for Rehearing on December 5, 1927.

The present suit was commenced on November 21, 1932 —five years later. It is against a different defendant and on a different record. During the five-year interval, the Appellant sought to bring to trial its previously pending suit on the same patent in the Western District of Missouri against one Cutino. At the instance of said Monarch Company, the prosecution of this suit was enjoined in the District Court for the Northern District of Illinois, Eastern Division. It claimed that the Cutino Company was its customer. Motion for temporary injunction was denied and appeal taken to the United States Circuit Court of Appeals for the Seventh Circuit on October 7, 1928. The District Court was reversed and the issuance of the temporary injunction ordered.

On September 12, 1928, The Mantle Lamp Company of America brought suit on the said Blair patent against George H. Bowman Company in the District Court of the United States for the Northern District of Ohio. That court held the Blair patent invalid and decreed a dismissal of plaintiff's bill of complaint. On appeal to the Circuit Court of Appeals for the Sixth Judicial Circuit reversal was had and the Blair patent held valid as to claim 1, without prejudice to the other claims.

Not all of the claims of the patent in suit were charged to be infringed in the foregoing causes. It is the contention of appellant that the Court's opinion of invalidity for lack of invention in the *Monarch* and *Macomb* cases in the Seventh Circuit related to all that was of substance in the said Blair patent in suit. The Mantle Lamp Company of America has not filed a disclaimer following the decision in the *Macomb* and *Monarch* cases.

QUESTIONS PRESENTED.

The questions presented and upon which the Circuit Court of Appeals desires the instruction and advice of the Supreme Court of the United States are:

> "1. Where certain but not all of the claims of a patent are in suit, and all of the claims in suit are held and decreed to be invalid pursuant to a finding and judgment to that effect of the Circuit Court of Appeals of the circuit, may the owner of the patent maintain a suit afterward brought thereon in the same judicial circuit as that in which the first cause was decided, and against a different defendant not involved in the first suit—the second suit being based on the claims held in the prior suit to be invalid and on other claims of the same patent not previously adjudicated—where the owner of the patent wholly

failed and omitted to file any disclaimer of the claims held in the first suit to be invalid, and where, between entry of decree of invalidity of the claims in the first suit and the bringing of the second suit in the same circuit, reasonable time had elapsed for filing such disclaimer?

2. If question (1) is answered in the affirmative does the intervention of a period of approximately five years between the final judgment in the first suit and the institution in the same circuit of the second suit constitute delay so unreasonable as to bar the second suit for want of disclaimer of the claims which had been held to be invalid?

3. If question (2) is answered affirmatively, may the institution or pendency of other suits in another judicial circuit or circuits after entry of final decree in the first suit, based on claims of the patent so held invalid and on other claims thereof not previously adjudicated to be invalid, excuse the failure to file disclaimer of the claims held invalid prior to instituting the later suit in the same circuit?"

THE STATUTES INVOLVED.

The statutes involved are Section 4917 R. S., 35 U. S. Code 65, and Section 4922 R. S., 35 U. S. Code 71, each relating to the subject matter of disclaimers. These statutes are set forth in full in Appendix E hereto.

INTRODUCTION TO ARGUMENT.

The facts herein distinguish the cases heretofore adjudicated under the disclaimer statutes from the case at bar. The disclaimer statutes have no application to the facts of this record.

Broadly speaking, cases relating to disclaimer after adjudication of invalidity are of three classes. The first type of case, illustrated by the case of *Altoona Publix Theatres, Inc.* v. *American Tri-Ergon, Inc.*, 294 U. S. 477, deals with an effort to broaden a patent claim by disclaiming certain elements therefrom.

The second type of case is where, upon a holding of partial invalidity by a Circuit Court of Appeals, the patentee will be required as a condition precedent to ultimate relief by way of injunction and accounting, and recovery of profits and damages upon claims held valid, to disclaim the claims held invalid. This rule has been adopted in several of the Judicial Circuits and is illustrated by the case of *Hoe & Co.* v. *Goss Printing Press Co.*, 31 Fed. (2) 565.

The third type of case is illustrated by the case of *Ensten* v. *Simon, Ascher & Co.*, 282 U. S. 445, 51 S. Ct. 207 which deals with a situation where a patentee, after adjudication of the invalidity of *some of the claims of his patent and validity of others*, fails to prosecute an appeal from such an adjudication. The question in that case was "whether a patentee to save the life of his patent when one claim thereof has been held invalid by an interlocutory decree, must either appeal from such a decree or promptly file a disclaimer."

It is reasonable to require a patentee in such a case to elect to disclaim or appeal after adjudication of invalidity rather than to take the position of holding out such a claim as valid on the one hand, and yet not attempting to demonstrate it to be valid. Such a position is obviously inconsistent and one requiring an election by the patentee. This and nothing more was the holding of the Supreme Court in the *Ensten* case. Excerpts from the opinion clearly demonstrate this (Pages 457-459):

"When a competent court has declared his pretensions without sufficient foundation, we think good faith and the spirit of the enactment demand that he act with such promptness as the circumstances permit *either to vindicate his position or to relieve the public from further evil effects of his false assertion* • • • *and those provisions were intended to protect only those who by prompt action either seek to overturn adverse ruling or retreat from a false position.*

"He did not choose this course but continued to hold himself out as possessor of the sole right to 'make, use and vend' under the rejected claim for nearly two years, then he abandoned it. *He made no effort promptly to vindicate what he had asserted, nor did he surrender it.* Thus he failed to earn the offered exemption and now he may not complain • • •.

"Certainly in this case where an appeal was taken by the defendants, it would have entailed no unreasonable hardship upon the patent owner promptly to have submitted the legality of the rejected claim for determination by the Appellate Court. The route to that end was obvious, easy, inexpensive. *He deliberately failed to defend his assertion of right by appealing.*" (Emphasis supplied.)

As we view it the gist of that opinion, is that a patentee be required to take a stand one way or the other upon a claim adjudicated invalid within a reasonable time after such adjudication. He should either "vindicate what he has asserted" by making every effort to obtain an ultimate holding of validity of the claim in question, or he should surrender that claim.

Obviously the first two classes of cases are inapplicable since no questions arise herein involving either the broadening of a claim by disclaimer, nor disclaiming in order to enforce a decree.

The *ratio decidendi* of the *Ensten* case is that one against whom a decree of invalidity has been rendered must, in fairness to the public, do one of two things; he must either accept defeat and disclaim, or he must continue to fight for the assertion and protection of the right granted him. Either procedure puts the public on notice and knowledge. The disclaimer, if that be the choice, is publicly of record. Continued litigation, by appeal or otherwise, is likewise of public knowledge. The public is not misled at any time by the continued assertion of a right through the medium of the courts, particularly when, as in this case, there has been continuously litigation pending with respect thereto.

It is appellant's position that continued litigation on the part of appellant brings it within the reasoning of the court in the *Ensten* case, and by analogy makes it applicable.

We have found no case where all, or substantially all, of a patent has been declared to be invalid for lack of invention in which the patentee was required to disclaim all except remaining minutia, nor do we believe such to be the spirit of the enactment.

SUMMARY OF ARGUMENT.

Point I.

All the material and substantial parts of the thing patented having been found to be invalid for lack of invention, there is no necessity for filing a disclaimer.

Winans v. *New York & Erie R. R. Co.*, 62 U. S. (21 How.) 88.

R. S. Sec. 4917 (U. S. C. A. Title 35, Sec. 65).

R. S. Sec. 4922 (U. S. C. A. Title 35, Sec. 71).

Brunswick, Balke, Collender Co. v. *Klumpp*, 131 Fed. 255 (C. C. A. 2).

Robinson on Patents, Secs. 643 and 645.

Point II.

Continuous efforts of a patent owner to vindicate its assertion of validity, after a finding of lack of invention, makes unnecessary the filing of a disclaimer.

Ensten v. *Simon, Ascher & Co.*, 282 U. S. 445.

R. S. Sec. 4917, 35 U. S. C. A. 65.

R. S. Sec. 4922, 35 U. S. C. A. 71.

Point III.

The Act of 1891 creating the Circuit Courts of Appeals contemplated finality of judgments and decrees for each Circuit without thereby binding all other Circuits. This has resulted in diversity of opinion resolvable only in the Supreme Court and has been long recognized by the Supreme Court's practice in reference to patent causes.

Point IV.

A valid disclaimer cannot be made to eliminate elements of a patent for a combination.

Altoona Publix Theatres Inc. v. *American Tri-Ergon, Inc.*, 294 U. S. 477.

Vance v. *Campbell*, 66 U. S. (1 Black) 427.

Gill v. *Wells*, 89 U. S. (22 Wall.) 1.

ARGUMENT.

Point I.

All the material and substantial parts of the thing patented having been found to be invalid for lack of invention, there is no necessity for filing a disclaimer.

Since one of Appellant's contentions is that no substantial part of its patent remained after the finding of invalidity by the Circuit Court of Appeals for the Seventh Circuit, a consideration of the claims of the patent are essential for a determination thereof, we attach hereto a copy of the Patent involved as Appendix "A".

The Blair patent No. 1,435,199 (Appendix A) covers a heat-insulated receptacle of the non-vacuum type and, broadly speaking, its several claims all in apt language included as its main structural features,—

(1) an outer metallic, (non-frangible) jacket;

(2) an inner container either frangible or vitreous;

(3) said container being sealed, bonded to, or pendently supported or sustained in, the jacket;

(4) heat-insulating and shock-absorbing comminuted material disposed between the walls of the jacket and the container.

The narrower features claimed, in various of the claims, included as additional elements, a paper lining substantially co-extensive with the jacket (Claims 2 and 15), a circumferential spun seam uniting parts of the outer jacket (Claim 3), a closure for the mouth of the container sepa-

rated from the inner-wall thereof (Claims 8 and 9), a silver coating on the outside of the inner-container (Claim 16), and vitreous stopper with resilient gasket, or a recessed resilient gasket (Claims 19 and 20).

In the Blair device, including a single walled container and a protective metal jacket, the frangible neck of the container and the metal neck of the jacket are so joined by a bond as to provide a unitary element of the device. This unitary element, wherein glass and metal are bonded together, was absolutely new in the art of non-vacuum, heat-insulated receptacles. Blair's combination of elements permits the production of large, strong, and thermally efficient heat-insulated receptacles that successfully competed with the small and fragile, though thermally efficient, vacuum, commonly called thermos, bottles.

The thermal efficiency of the Blair device, as described in the patentee's specification, is due to the fact that the pendent vitreous (glass) receptacle of the new unitary element is so combined with the other parts as to afford only a single, poor heat conducting path and to the fact that moisture is prevented from entering the space between the container and the jacket, which would destroy its thermal efficiency. The result of Blair's combination is, that equalization of temperatures within and without the receptacle is deferred almost as long as it is in the thermos bottle wherein heat-insulation is obtained by a vacuum.

The Circuit Court of Appeals for the Seventh Circuit in the case of *Macomb Manufacturing Company* v. *The Mantle Lamp Company of America,* (Appendix B) 22 Fed. (2d) 93 said, at page 95:

> "The result obtained by Blair may be a better structure than was ever before produced and yet for the lack of novelty of device or new result produced, it

may have no patentable quality. He has assembled—combined in the ordinary sense—old and well known elements but he has not made an invention."

This opinion was adopted by reference by the court in the case of *Monarch Co. Inc. et al* v. *The Mantle Lamp Company of America,* (Appendix C) 22 Fed. (2d) 95.

The claims not in issue in either of those cases, were 2, 8, 9, 15, 16, 19 and 20. Those particular claims, as indicated above, in addition to the dominant structural features of the invention claimed, add only additional details, such as the paper bag, the outside silvering on the container, a vitreous instead of a cork stopper, the gasket for the stopper, or a stopper separated from the inner-wall of the container by an over-extending flange at its upper end. The additional subject matter of the omitted claims therefore refers in each instance to minutia. While these claims, notwithstanding this, might be valid if the broader, dominant, combinations in the other claims were valid, when it is postulated that the claims in suit are invalid, it follows necessarily that the minutia in the claims not in suit would not impart invention with respect to them, particularly when the court found that only mechanical skill and not inventive genius were used in combining the essential elements of the invention. In its broader aspect, the entire substance of the patent was gone.

As an example: Had the duty devolved upon the Appellant to effectually disclaim after the finding of no invention, in order to avail itself of the benefits of the statute, it would have been necessary for it to disclaim all of the fundamental structural features of the patent, including the outer metallic jacket, the inner frangible or vitreous container, means for sealing, bonding or pendently supporting the container from the jacket at only one point,

and comminuted heat-insulating and shock-absorbing material disposed between the jacket and the container, and to disclaim claims 1, 3, 4, 5, 6, 7, 10, 11, 12, 13, 14, 17, 18, 21, 22, 23 and 24, including all the dominant elements of the invention, and either by qualifying disclaimer or by necessary implication would have been required to disclaim those same elements as to claims 2, 8, 9, 15, 16, 19 and 20. Remaining then as novel features would be as to claim 2, "a lining disposed within said jacket and substantially co-extensive with said jacket; as to claims 8 and 9, a closure (disclaimed) separated from the inner wall of said neck by a heat-insulating air space"; as to claim 15, "a retainer for holding said insulating material in place pending the placing in position of a section of the outer jacket" (the same element as claimed in claim 2); as to claim 16, said container "having an outside coating of silver to render it opaque and reflective of heat rays"; as to claim 19, "a *vitreous* stopper carrying a resilient gasket" and as to claim 20, "a *vitreous* stopper having a recess carrying a resilient gasket."

Appellant would have *then* been permitted to test the validity of the remaining claims, the novel features of which would be only a paper lining, a separated stopper, a silver coating on the outside of the container, or a vitreous stopper with a gasket. The ineffectiveness of such a disclaimer in a combination patent will be discussed under another heading.

It is readily apparent that after the finding by the Circuit Court of Appeals in the foregoing cases no material or substantial part of the thing patented remained which the inventor could truly and justly claim as his own, since, as this court so aptly said in the case of *Altoona Publix Theatres* v. *American Tri-Ergon Corporation, et al,* 294 U. S. 477-492:

> "Upon the filing of disclaimers, the original claims were withdrawn from the protection of the patent laws and the public was entitled to manufacture and use the device originally claimed as freely as though it had been abandoned."

Neither the disclaimer Statutes, which were enacted in the first instance to soften the original harsh common law rule, nor practical equity require a disclaimer under these circumstances.

This court indicated in *Winans* v. *New York and Erie R. R. Co.*, 62 U. S. (21 How.) 88, that disclaimers are not involved "where the disclaimer, to be effectual, would include the whole invention". It is the Appellant's position that the disclaimer sections of the statute do not apply where no "material or substantial part of the thing patented" would remain after disclaimer.

An examination of the opinions appearing in the Appendix to this Brief will disclose that the Circuit Court of Appeals for the Seventh Circuit held the claims of the Blair patent involved void for lack of invention; and that the Circuit Court of Appeals for the Sixth Circuit differed in its judgment on the same question. In respect to the claims of the Blair patent held invalid, there is no question of improperly claiming more than the patentee invented. The sole question in respect to validity is whether the patentee invented anything. The disclaimer statutes relate to the claiming of something in excess of the real invention and if this excess of claim is separable, the defect in the patent may be cured by disclaimer. That the application of the disclaimer statutes is to the situation when an excess over an invention is claimed, is supported by *Robinson on Patents*, Section 643, wherein the author, in discussing disclaimers, states:

"A claim is excessive when it claims any material and substantial act or thing beyond the scope of the real invention of the patentee, or beyond the scope of what he has described in his specification, drawings, or model, as his invention."

And again, in the same section, the author states:

"Whether it exceeds the real invention is determined by ascertaining the precise limits of the idea of means embodied in the invention and inquiring if the allegations of the claim cover any substantial instrument or operation not embraced in this idea."

The same thought is made more positive in Section 645 of Robinson which is quoted below in full.

"An excessive Claim can be amended by a disclaimer only when the Claim as amended would cover a patentable invention. The patentee has no right to any patent whatever unless he has invented something which may lawfully become the subject-matter of a patent, and no mistake of his in coupling with his own production such instruments or operations as give to the described invention its entire patentable character can entitle him to retain the patent for what is truly his, after disclaiming that excess in which the attributes of a patentable invention alone reside. No one, therefore, can be permitted to disclaim, unless he or the alleged inventor from whom he derives his title has performed an inventive act, resulting in some material and substantial part of the thing patented which is so far separable from the excess that the patent can be valid for it, and protect it, after the excess has been disclaimed."

But the sole question as to the validity of the Blair patent is not one of excess or divisibility; rather it is the question of invention. No portion of the patent can be disclaimed without disclaiming the whole patent. Against the contention that the patent is invalid for lack of invention, the patentee has no cure or method to remedy the claims save through litigation to enforce them. In all the litigation over the Blair patent, there has been no contention that Blair claimed more than he invented; the sole contention has been that he invented nothing. There is no divisible claim to cured by disclaimer and no claim which may separately be disclaimed. The question of validity goes to the entire patent. As the Circuit Court of Appeals for the Seventh Circuit said in its opinion in the *Monarch* case, Appendix C, namely,

"We hold the patent invalid".

Under this situation, the disclaimer statutes offer no remedy to the appellant. One cannot by any fractionation disclaim a part of zero. He can contest the postulated premise that his patent is zero.

Point II.

Continuous efforts of a patent owner to vindicate its assertion of validity, after a finding of lack of invention, makes unnecessary the filing of a disclaimer.

This court while repeatedly condemning the practice of endeavoring to enforce claims of a patent found to be valid, by those who refuse to disclaim broader claims found invalid, has impliedly approved the right of a patentee to refuse to dedicate to the public all the substance of his patent by disclaimer, provided he vigorously attempts to vindicate his assertion of validity.

The Circuit Court of Appeals for the Seventh Circuit, in its opinion in the case of *Macomb Manufacturing Company* v. *The Mantle Lamp Company of America,* 22 Fed. (2d) 93, selected three patents urged in defense, although two of them did not even belong in the same art, and from those three patents selected three separate elements (one from each) and combined them in an impossible manner and held that the selection of these elements, and the combining of them involved mechanical skill and not invention.

The Appellant then, as now, asserted that the Circuit Court of Appeals for the Seventh Circuit was not justified in arriving at such conclusion nor in selecting from non-analogous arts the prior patents and ascribing to elements thereof functions that the patentees themselves never contemplated nor claimed, and combining those elements, without showing how such a combination could be made, and then finding that not a flash of genius was required to combine the elements into one unitary structure.

Appellant realizing that all of the substance of its patent was gone, then adopted a course which deceived no one as to its intentions. It was not holding out invalid claims as a threat, while it contemporaneously endeavored to enforce claims found valid, but rather, it began a long, continuous, uphill fight to vindicate its position and hoped to ultimately establish the validity of the dominant structural features of its patent. Necessarily such a course of action received set-backs and rebuffs. Its course of action involved the following:

1. Upon the denial of its petitions for rehearing in the *Macomb Manufacturing Company* and *Monarch Company* cases on December 5, 1927, it proposed to and did endeavor to bring to trial its prior co-pending case entitled *The Mantle Lamp Company of America* v. *The Cutino Com-*

pany, pending in the District Court of the United States for the Western District of Missouri.

On January 3, 1928, the Monarch Company, one of the successful litigants in the cases before that time decided by the Circuit Court of Appeals for the Seventh Circuit filed its bill to enjoin the prosecution of said pending case against The Cutino Company in the District Court of Missouri, alleging The Cutino Company to be its customer.

Preliminary injunction being denied, an appeal to the Circuit Court of Appeals for the Seventh Circuit was successful in preventing a trial of the said *Cutino* case (October 8, 1928), so that then the Eighth Circuit as another forum was closed to the Appellant.

2. Prior to the decision of the Circuit Court of Appeals for the Seventh Circuit ordering the issuance of the preliminary injunction to enjoin the prosecution of the Kansas City case, and on September 12, 1928, the Appellant sought redress in the Sixth Circuit by filing a bill for infringement on the same patent against the Geo. H. Bowman Company (it not being a customer of either the Monarch Company or the Macomb Manufacturing Company), in the District Court of the United States for the Northern District of Ohio.

The Ohio District Court, through comity, followed the Seventh Circuit opinions in the *Macomb Manufacturing Company* and *Monarch Company* cases and again found the patent and claims therein sued upon to be invalid.

3. In spite of the usual persuasiveness of an opinion from another Circuit Court of Appeals, the Appellant prosecuted its appeal to the Circuit Court of Appeals for the Sixth Circuit in the said *Bowman* case. Its position in refusing to accept the invalidity of the Circuit Court of Appeals for the Seventh Circuit as being final, was then

justified in that the Circuit Court of Appeals for the Sixth Circuit found the Blair patent valid and reversed the District Court for the Northern District of Ohio.

The Circuit Court of Appeals for the Sixth Circuit, in considering this appeal, examined the entire records in the *Monarch Company* and *Macomb Manufacturing Company* cases decided by the Seventh Circuit Court of Appeals, not for the purpose of reviewing them as an Appellate tribunal, but presumably in an effort to reconcile the Seventh Circuit Court of Appeals' findings with the evidence then before the Circuit Court of Appeals for the Sixth Circuit, and to promote uniformity of decision between Circuit Courts of Appeal.

The opinion of the Sixth Circuit Court of Appeals (Appendix D), reversing the *Bowman* case and finding the Blair patent valid and infringed, is interesting and instructive in that in a foot note it discusses the evidence in the prior cases (*Macomb* and *Monarch*) and in considering the art which the Circuit Court of Appeals for the Seventh Circuit had selected and combined so as to label the same mechanical skill and not invention, said (445):

> "Even if this were a case where the lack of invention could be spelled out in this way, the patents do not seem to us sufficient for that result."

It justified its opinion of validity by the testimony of two competitors showing their unsuccessful efforts to obtain patentee's results by other means, and said that "this evidence alone goes far towards justifying a different result." (*The Mantle Lamp Company of America* v. *Geo. H. Bowman,* 53 Fed. (2) 441, 445. Appendix D.)

The Circuit Court of Appeals for the Sixth Circuit specifically refrained from passing upon more than one claim

and did so without prejudice to any of the Appellant's rights under any other claim.

4. Although probably unprecedented to file a petition for the writ of certiorari in the United States Supreme Court from a decree of which petitioner was not complaining, Appellant nevertheless, in pursuing its efforts to vindicate its position, did file such petition in the *Bowman* case in the Sixth Circuit, there then being a diversity of opinion between circuits not only as to the applicable law involved but on the specific facts as well.

This petition for the writ of certiorari being denied March 14, 1932 (285 U. S. 545), the petitioner filed its bill in the instant case again in the Seventh Circuit reasserting the validity of the Blair patent and substantially all of the claims adjudicated in the former cases in the Seventh Circuit Court of Appeals. The District Court for the Northern District of Illinois, Eastern Division, in this case, found the patent invalid following the opinions of the Circuit Court of Appeals for the Seventh Circuit in the *Macomb Manufacturing Company* and *Monarch Company* cases, and likewise, because the Appellant had failed to file disclaimers after the findings of invalidity in the cases previously adjudicated in the Seventh Circuit. Since the Circuit Court of Appeals for the Seventh Circuit in the *Macomb* and *Monarch* cases did not find part of the Blair patent valid and other portions thereof invalid, (as for instance,—too broad), but rather, without differentiation as to claims, decisively eliminated the entire patent from further consideration of validity, the Appellant was justified in feeling that, in the court's opinion, "No material or substantial part of the thing patented was truly and justly the patentee's" so as to bring him within the sections of the disclaimer statute, permitting one by com-

pliance therewith to salvage or save the residuum of his patent.

It is the Appellant's position in this regard, that the Appellant has not held the claims of its patent found invalid as a threat over the heads of the public without endeavoring to vindicate its position but rather its course of conduct has been such that the trade generally understood quite thoroughly that it believed its patent valid and would pursue its remedies generally to the extreme in its efforts to maintain that position.

The very fact that the Appellant is before this court on these questions certified from the court that had previously found the Blair patent to be invalid, may indicate that with respect to the validity of the patent the Circuit Court of Appeals for the Seventh Circuit in the instant case has already satisfied itself and that the substantial remaining question involved, is the applicability of the disclaimer statutes under these circumstances involving continuity of effort to substantiate an allegation of validity.

We believe this precise question has not heretofore been passed upon by this court, although the opinion in the leading case of *Ensten* v. *Simon, Ascher & Company,* 282 U. S. 445, suggesting an exception to the general rule leads us now to urge as applicable herein, the doctrine thereof where the court said, page 455:

> "When a competent court has declared his pretensions without sufficient foundation we think good faith and the spirit of enactment demand that he act with *such promptness as the circumstances permit* either to vindicate his position or to relieve the public from further evil effects of his false assertion." (Italics ours.)

The Appellant has acted with such promptness as the circumstances permitted (necessary court delays and modern procedure considered) and should be entitled to the benefit under the exception to the rule already implied by the court.

Long continued practice has permitted seeking adjudications of patents in more than one circuit. Without it, few patent infringement suits would heretofore have been adjudicated by this court, particularly after the establishment of the Circuit Courts of Appeals and the finality of their opinions, (except in cases of diversity of opinion between Circuits), and prior to the enactment of 1925 extending and enlarging the jurisdiction of this Court to all cases.

Apparently a patentee must, in *each* instance, be successful, else he may lose his entire franchise by failure to disclaim, but an infringer loses no right to question and contest validity, no matter how often the patent may previously have been found to be valid. Certainly no such unreasonable rule was contemplated.

There never would be necessity for this Court in the interest of uniformity of decisions between circuits to consider patent infringement cases where the patentee in his case adjudicated first in point of time was unsuccessful, even though he might be successful in establishing validity in a later case in another circuit. The patentee herein did not acquiesce in the first ruling—it aggressively pursued its rights in another forum. Was it unreasonably neglectful or dilatory in failing to disclaim—should it have dedicated all or substantially all of its patent to the public? If that be the proper interpretation of the disclaimer statutes, then the cases hereinafter set forth in which the first

adjudication was against the patentee should never have been considered by this Court.

Expanded Metal Co. v. *Bradford,* 214 U. S. 366, 29 S. Ct. 652.

Diamond Rubber Co. v. *Consolidated Rubber Tire Co.,* 220 U. S. 428, 31 S. Ct. 444.

Dowagiac Manufacturing Co. v. *Minnesota-Moline Plow Co.,* 235 U. S. 641, 35 S. Ct. 221.

Railroad Supply Co. v. *Elyria Iron & Steel Co.,* 244 U. S. 285, 37 S. Ct. 502.

Abercrombie & Fitch Co. v. *Baldwin,* 245 U. S. 198, 38 S. Ct. 104.

T. H. Symington Co. v. *National Malleable Castings Co.,* 250 U. S. 383, 39 S. Ct. 542.

Meccano, Limited v. *John Wanamaker,* 253 U. S. 136, 40 S. Ct. 463.

New York Scaffolding Co. v. *Chain Belt Co.,* 254 U. S. 32, 41 S. Ct. 21.

John E. Thropps Sons-Co. v. *Seiberling,* 264 U. S. 320, 44 S. Ct. 346.

Corona Cord Tire Co. v. *Dovan Chemical Corporation,* 276 U. S. 358, 48 S. Ct. 380.

Saranac Automatic Machine Corp. v. *Wirebounds Patents Co.,* 282 U. S. 704, 51 S. Ct. 232.

Radio Corporation v. *Radio Engineering Laboratories,* 293 U. S. 1, 54 S. Ct. 752.

Disclaimer statutes if construed to penalize a patentee under the circumstances herein arising so as to bar him by reason of his failure to disclaim would be contrary to the spirit of the enactment. As is well known, under the early practice patents invalid in part were invalid *in toto.* The disclaimer statutes were intended to soften this harsh rule. Ample justification for the Appellant in this

position is found in the differences of opinion that exist now between circuits.

The often quoted case of *O'Reilly* v. *Morse,* 56 U. S. (15 How.) 62 (1853) at page 121 suggests that delay was not unreasonable in that case because among other things "differences of opinion in relation to it are found to exist among the judges of this court." If it was an excuse in that case, surely the proved excuse of a difference of opinion between Judges of the Sixth and Seventh Circuits now justifies Appellant's proposition that the passage of time was not unreasonable, inasmuch as Appellant was consistently and with such speed as the courts permitted attempting to establish the validity of the patent, even to the extent of attempting to secure the opinion of the court of last resort, to-wit, this court, in having applied to the Supreme Court for the writ of certiorari from the Sixth Circuit case.

The Court, in the case of *O'Reilly* v. *Morse,* said, p. 121:

> "The law which requires and permits him to disclaim, is not penal but remedial. It is intended for the protection of the patentee as well as the public, and ought not, therefore, to receive a construction that would restrict its operation within narrower limits than its words fairly import. It provides 'that when any patentee shall have in his specification claimed to be the first and original inventor or discoverer of any material or substantial part of the thing patented, of which he was not the first and original inventor, and shall have no legal or just claim to the same,'—he must disclaim in order to protect so much of the claim as is legally patented."

As Appellant construes the disclaimer statutes, insofar as judicial determination of an inventor having claimed more than that of which he was the original inventor is concerned, it applies only where a patent has been adjudi-

cated to be partly valid and partly invalid, as for instance too broad, and the valid part may be so separated from the invalid part that after the elimination of the invalid part substance still remains in the patent. The disclaimer sections of the statute are not applicable to the instant situation if it is to be construed as a remedial statute rather than a penal one. To construe it against this Appellant would be to penalize it to a greater extent than if the statute had never been passed. For instance, upon the finding of invalidity, for want of invention, of all the substantial parts of Appellant's patent by the Circuit Court of Appeals, the patent, in so far as that circuit is concerned, would have been entirely invalid. The Appellant, however, would have had the right of adjudication in another circuit, and having done so successfully, would have had the right to seek the intervention of this Court on the writ of certiorari to finally determine the validity or invalidity of its patent without any question of necessity for disclaimer arising and without the intervention of any such defense which might bar its rights in a later suit, so that under those circumstances the statute intended as a remedy becomes a penalty, a weapon instead of a bulwark.

Point III.

The Act of 1891 creating the Circuit Courts of Appeals contemplated finality of judgments and decrees for each Circuit without thereby binding all other Circuits. This has resulted in diversity of opinion resolvable only in the Supreme Court and has been long recognized by the Supreme Court's practice in reference to patent causes.

The Act of 1891 creating Circuit Courts of Appeals, Chapter 517, Section 6, 26 Stat. 828, as amended, Section 128 of the Judicial Code, Title 28, U.S.C.A. 225, provides

under Item d the circuits in which reviews shall be had by Circuit Courts of Appeals, *inter alia*, decisions of a District Court of the United States within a State in the circuit embracing such State. Circuit Courts of Appeals were specified respectively for the District Court of Alaska or any division thereof; The Supreme Court of Hawaii, the United States Court for China, the Courts of Porto Rico, of the Virgin Islands, and the Canal Zone.

The appellate jurisdiction of a Circuit Court of Appeals is of course wholly statutory. The intention of Congress is apparently to define and limit the territorial jurisdiction of each Circuit Court of Appeals, to reviews of judgments and decrees of District Courts in that circuit. If there had been any intention to make any right determined in one circuit applicable to all circuits, save for the interposition of the doctrine of *res adjudicata*, Congress would have said so. No exception is made as to patent rights, and there is nothing to indicate that this is in a different class from any other rights on which court adjudications may be had. The disclaimer statutes were apparently designed to care for those patents or contracts that had within them sound, as well as unsound, subject matter. This idea is not new. In the law of contracts, generally, the rule had been long established that where an illegal part thereof was so wrapped up in the contract that it could not be segregated it tainted the entire instrument, but where the illegal part could be segregated it did not invalidate the valid part (*N. Y. C. R. Co.* v. *Gray*, 239 U. S. 583; *U. S.* v. *Mora*, 97 U. S. 413; *U. S.* v. *Bradley*, 10 Pet. 343, 9 L. Ed. 448 (1836); *Gelyscke* v. *Dubuque*, 1 Wall 221 (1863); *Armstrong* v. *Toler*, 11 Wheat. 258 (1826). The same principle has been applied in the case of wills (*Trustees of Phila. Baptist* v. *Hart*, 4 Wheat. 1; *Dahlgren* v. *Pierce*, 270 Fed. 507, (Appeal dismissed 256 U. S. 682,

Certiorari denied, 256 U. S. 692), and in the case of deeds (*McGuire* v. *Van Pelt,* 55 Ala. 344; *Thompson* v. *Marshall,* 36 Ala. 504; *Clark* v. *Hoover,* 51 Tex. Cir. App. 181).

Apparently the disclaimer statute was a mere application of these principles to patents. It was not intended to put upon anyone the duty of disclaiming in a case where the question as to validity went to the entire instrument; and if this be so, then there could be no application of it to a case where the whole or a substantial part of the instrument is found invalid. It is not a case where the old doctrine of invalid in part, invalid *in toto* is to be applied with the remedy against a situation which had been obtained by judicial construction in respect to other instruments, as above pointed out. And so we have a situation in which, quite regardless of the disclaimer statutes, the patent in one action is found invalid. There is no duty upon the owner of a patent to do anything about it. He brings another suit within a short time or within a long time. Length of time is quite immaterial. In respect to his first suit he is barred, as far as the defendant in that suit is concerned, by the well established principle of *res adjudicata.* But the doctrine of *res adjudicata* cannot be transferred for another's benefit. It is true that there are principles not determinative of necessity that are at times applied by way of example under such doctrines as *stare decisis* and under rules of comity where, however, there is no duty imposed upon the tribunal.

Congress did not intend (there is nothing whatever to indicate that it did so intend) to take from the courts of one circuit the power to make its own determination; or to take from the court in a particular circuit power even to change its mind in other litigation on the same subject matter; or to change its mind in other litigation upon the same subject matter generally but with a differ-

ent record. Whatever the power of Congress may be to provide that if a patent adjudicated in a court of last resort in reference to one circuit shall be determinative and binding upon all other circuits, or whatever the power of Congress to declare that a patent adjudicated in any court in any suit shall be a final adjudication of that patent in the same circuit as against all other litigants, it is plain that it has never been exercised. Such a power if exercised would doubtless in fairness have provided that a patent found valid in one circuit could never again have its validity challenged in any other circuit.

Congress in 1925 made changes in the jurisdiction of Circuit Courts of Appeals and of the Supreme Court. It eliminated all rights of appeal that had theretofore existed and abolished writs of error and made every determination in Circuit Courts of Appeals final, save for the relief that might be granted upon the issuance of the writ of certiorari of the Supreme Court. If Congress then had any idea of making the determinations of any Circuit Court of Appeals final as to all circuits and of imposing on any circuit a duty to disregard activities in respect to a given subject matter in other jurisdictions, they would have again said so. Congress promulgated no such procedure.

There can be no finality to the ruling of a Circuit Court of Appeals in one circuit binding upon other circuits—persuasive possibly, but not binding. The rule is no different in patent infringement cases than in other cases.

Appellant herein had a perfect right after the entire substance of its patent had been invalidated to seek to have its patent adjudicated in another circuit. If criticism be directed to the failure of appellant to file a petition for the writ of certiorari in the cases first adjudicated in the Seventh Circuit, the *Macomb* case and the *Monarch* case, appellant's position is that having been advised by this

Court in Rule 38 of its Revised Rules of the circumstances under which such writs would be granted in an endeavor of the court to prevent an over-plus of petitions of this sort Appellant's cases in the Seventh Circuit did not come within it and could not come within it until diversity of opinion between circuits was established. When the situation first arose, Appellant took the only possible action, even though possibly unprecedented, as hereinbefore suggested, which was to endeavor to secure the writ by petition to the Sixth Circuit in the *Bowman* case.

Differences of opinion in relation to the validity of the patent herein exist between Circuit Courts of Appeals. Any doctrine which invokes the disclaimer statutes as a bar in this proceeding and which does not give heed to Appellant's successful efforts in the Sixth Circuit case as tolling the time would be quite contrary to the practice contemplated by this court in suggesting that the court under proper circumstances would consider petitions for the writ of certiorari to promulgate uniformity of decisions between circuits.

Point IV.

A valid disclaimer cannot be made to eliminate elements of a patent for a combination.

It has properly been held that a disclaimer cannot properly apply to a patent claim for a combination so as to eliminate one or more elements of the combination.

Vance v. *Campbell*, 66 U. S. (1 Black) 427.
Gill v. *Wells*, 89 U. S. (22 Wall.) 1.

Obviously the result of such a disclaimer would be to leave the claim for a lesser number of elements in com-

bination, broader and not narrower. Under the statute the patentee is only permitted to disclaim when he has claimed more than he had a right to claim.

The claims in the patent involved herein are for a number of elements in various combinations.

CONCLUSION.

The Certified Questions.

Contemplating that the Court's opinion herein will definitely decide the problem herein presented in all its realties, Appellant's position as to the first certified question is, that the patent owner may, without disclaimer, again sue in the same judicial circuit, or any judicial circuit, on a different record if the claims held invalid covered all the material or substantial part of the thing patented (as they did herein), particularly in view of the institution, pendency, and prosecution of other suit or suits in another judicial circuit or circuits during and after entry of the final decree in the first suit based on claims held invalid and on others not previously adjudicated, and in view of the termination of such proceedings in the other Circuit Court of Appeals in a decree of validity and infringement.

As to Certified Question 2—Continuity of prompt effort in another forum, regardless of the actual time consumed in the pendency, trial and appeal of pending cases, so explains elapsed time, that the particular circumstances of each case must be considered in determining what is a reasonable time.

Appellant urges therefore, that the intervention of approximately five years time between final judgment in the

first suit and the institution in the same circuit of the second suit, did not constitute delay so unreasonable as to bar the second suit for want of disclaimer, since during the interim the Appellant was prosecuting another suit on the same patent in another Circuit Court of Appeals, and in endeavoring to have the diversity of opinion and decision between the Circuits so occasioned, reviewed by the United States Supreme Court.

In Appellant's view hereof, an answer to Question 3 is hereinabove provided in the answers to the previous questions.

Respectfully submitted,

GEORGE I. HAIGHT,
Attorney for Appellant.

W. H. F. MILLAR,
M. K. HOBBS,
Of Counsel.

LEWIS VAN DEVENTER BLAIR.

HEAT INSULATED RECEPTACLE.

APPLICATION FILED OCT. 29, 1919.

1,435,199. Patented Nov. 14, 1922.

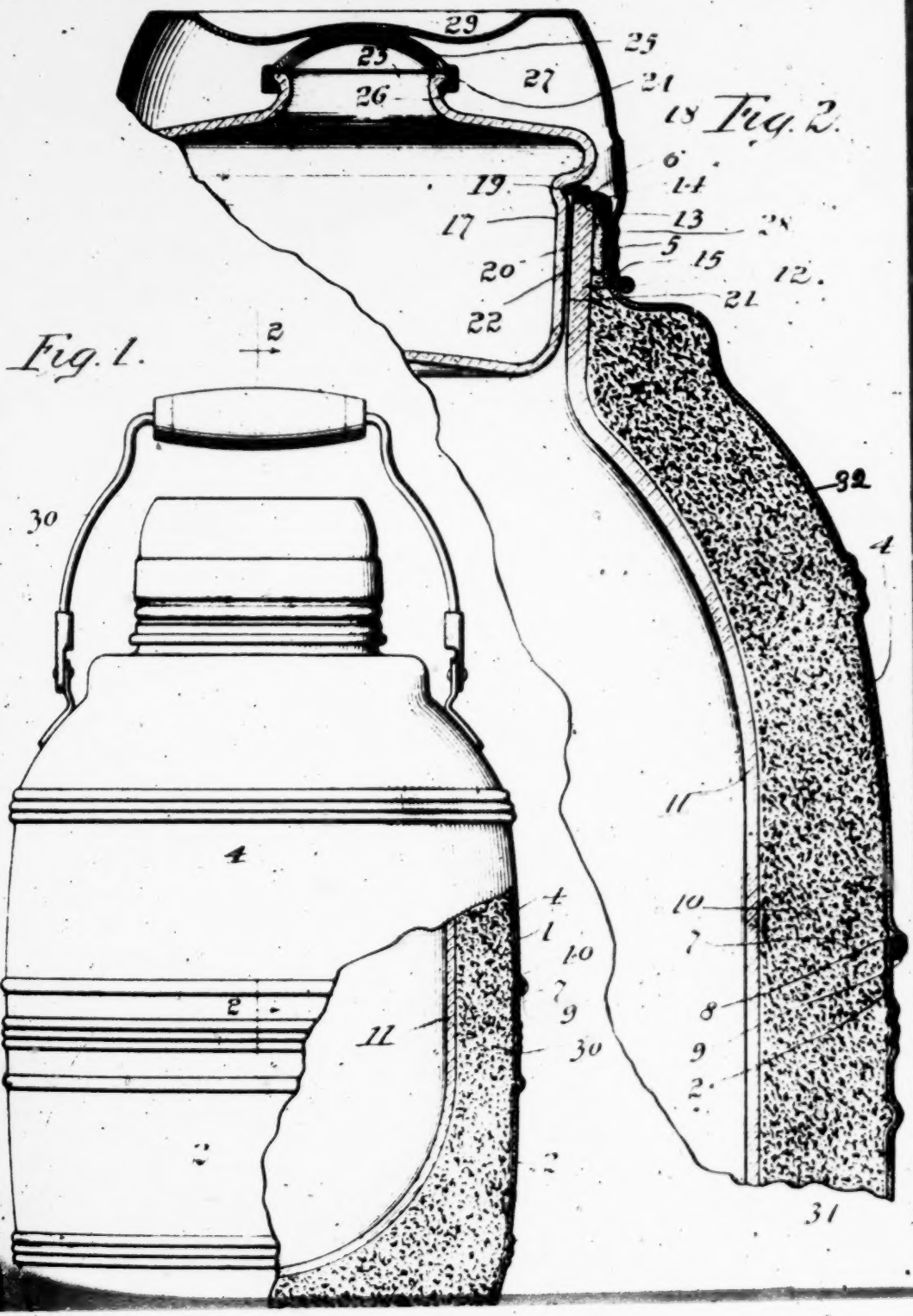

1,435,199. Patented Nov. 14, 1922.

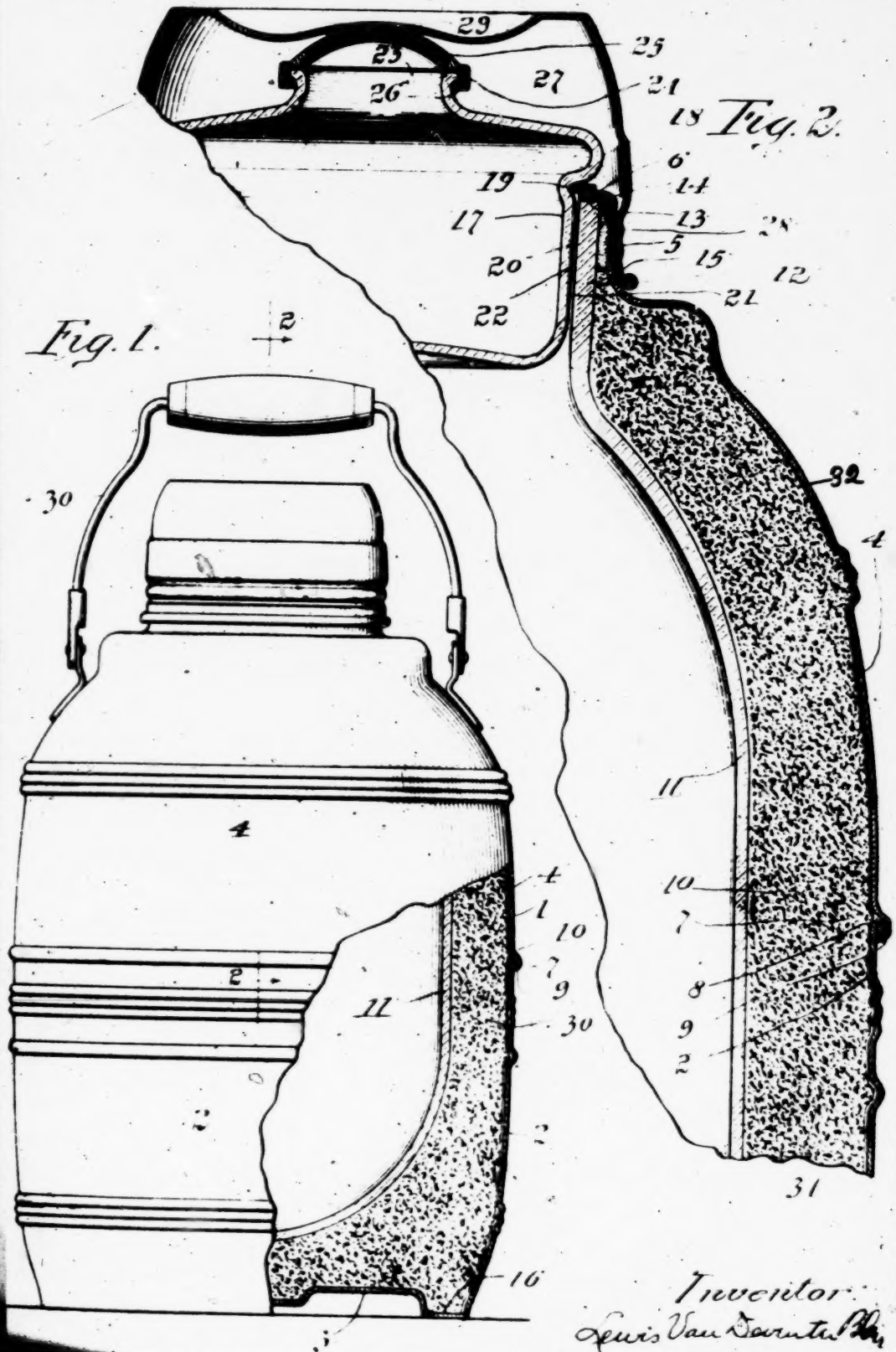

APPENDIX A.

Patented Nov. 14, 1922. 1,435,199

UNITED STATES PATENT OFFICE.

LEWIS VAN DEVENTER BLAIR, OF CHICAGO, ILLINOIS, ASSIGNOR TO THE MANTLE LAMP CO. OF AMERICA, OF CHICAGO, ILLINOIS.

HEAT-INSULATED RECEPTACLE.

Application filed October 29, 1919. Serial No. 334,212.

To all whom it may concern:

Be it known that I, LEWIS VAN DEVENTER BLAIR, a citizen of the United States, residing at Chicago, in the county of Cook and State of Illinois, have invented certain new and useful Improvements in Heat-Insulated Receptacles, of which the following is a specification.

The invention relates to receptacles of the heat-insulated non-vacuum type, objects thereof being to economically produce relatively large receptacles, to render such receptacles sanitary and easy to clean, to improve the insulation, to provide means for easily and permanently assembling and uniting the component parts, and to minimize the transmission of shocks to the inner vessel or container which, being preferably composed of glass or other frangible substance, is likely to be broken if means for its protection from extraneous shocks are not utilized.

The invention will be best understood by referring to the drawing constituting a part of this specification in which Figure 1 is a view in elevation with portions broken away to show the lower parts of the outer jacket and the container with which a receptacle made in accordance with the invention is to be provided; and Figure 2 is a sec-

tional view of a portion of such a receptacle showing the construction of the upper parts thereof on a larger scale.

The outer jacket, 1, is made of at least two parts, a lower cylindrical section, 2, having a bottom, 3, and an upper cylindrical section 4, which terminates in a threaded neck, 5, having an inturned flange, 6. These two sections, 2 and 4, which are preferably of metal or other non-frangible substance, are united by a substantially air-tight and water-tight spun joint, 7, consisting of an outwardly-turned bead, 8, on one section and an inwardly turned lip, 9, on the other section, said lip being spun over said bead and being a continuation of a deflected portion, 10, of the upper section which constitutes a shoulder against which said bead rests.

The inner container, 11, may be made of glass or some other vitreous substance, which, despite its fragility is employed because it is a poor conductor of heat and in order that the interior of the container may be properly cleaned and insanitary conditions avoided. The container is provided with a neck, 12, the upper edge, 13, of which terminates under the inturned flange, 6, of the threaded neck, 5, to which it is bonded by a substantially infusible substance 14, of low heat conductivity. The bond may be in part disposed between the necks 5 and 12, of the jacket and the container which are separated to leave a space, 15, whereby their only physical connection is through the bond, 14, which on account of its low heat conductivity and its consequent disability as a heat conductor is incapable of transferring much heat from the container to the jacket if the contents be hot, or from the jacket to the container if the contents be cold. The container should be silvered to intercept radiant heat, and, for convenience of manufacture, is made of one piece of glass. The bottom of the container is devoid of angles and is approximately of semi-

spherical form, the object being to avoid fractures which are caused by unequal expansion of parts of vessels of irregular shapes.

The bottom, 3, of the jacket is provided with a support, 16, of limited area to enable the receptable to rest upon irregular surfaces without tilting and for reducing conduction of heat to objects on which the receptacle may be placed.

The stopper, 17, for the container, 11, is hollow and preferably made of glass, and it is provided with a rib, 18, from which it may be sustained. The air may be exhausted from the space within the stopper, or rarefied by expansion before the stopper is closed. A gasket, 19, which may be of rubber, is interposed between the rib, 18, and the edge, 6, of the container to make a tight joint, to cushion the surface thereof and to prevent any considerable heat from being conducted to the stopper, 17. The cylindrical outer wall, 20, of the stopper and the inner cylindrical wall, 21, of the neck, 12, are separated by an annular space, 22, to limit heat conduction and are ground to remove any protuberances or irregularities which might, if present, interrupt the continuity of said annular space, 22, and establish undesirable and excessive paths of heat conductivity. The stopper, 17, is normally out of contact with the contents of the container, 11, and hence all of the heat which is conducted to the stopper must be transmitted through the glass neck, 12, of the container which is of relatively small cross-section and a poor conductor of heat. If the stopper were not spaced from said neck, the insulation would be appreciably impaired and the period of heat retention would be somewhat shortened.

The stopper has a relatively small mouth, 23, which is provided with an external bead, 24, and this mouth is closed by a convex cap, 25, that is secured in position by a her-

metical adherent seal, 26, extending over the edge of said mouth, and, if desired, over said external bead.

A cover, 27, having a threaded lower edge, 28, which engages the threads of the neck, 5, of the jacket, 1, is provided with a centrally disposed cavity, 29, in its top wall which cavity coincides with the convex cap, 25, of the stopper, 17, to thereby center said stopper and compel a concentric disposition of said stopper and the neck, 12, of the container, as well as to maintain the separation of their adjacent surfaces.

The receptacle is provided with a bale, 30, to facilitate its handling.

The space between the jacket, and the container 11, is filled with a comminuted substance 31, of poor heat conducting properties, such as cork, and this substance is packed with sufficient density to prevent violent pendulous movements of the container occasioned by shocks administered from without the receptacle, while permitting the expansion and contraction and the slight bodily movements of the container which are produced by changes of temperature. The walls of the jacket, 1, and the container, 11, are spaced apart a sufficient distance to prevent indented portions of the jacket from exerting pressure upon or transmitting shocks to the frangible wall of the container, and to admit of the dispersion of the force of external blows into the relatively thick protective packing, 31, in order that said frangible wall may not be broken. The distance between the walls of a vessel having substantially a capacity of one gallon should be one inch or more, and the packing should be such as to readily disperse shocks.

By employing a two-part jacket the manufacture of the receptacle is greatly facilitated. The various parts are separately produced ready for assembling, whereupon the

container is inserted into the top portion of the jacket from below and bonded thereto. The container is then silvered by a well-known process and the coating of silver covered by a film of protective paint. The packing is next introduced, and this part of the assembling operation is accomplished by telescoping a cylinder, 32, of paper or other poor conductor of heat into the section, 4, of the jacket, 1, said cylinder being substantially coextensive with said jacket. The non-conducting filling, 31, is then placed within said cylinder and packed in the desired degree, whereupon the section, 2, of the jacket is slid over said cylinder and secured in position by spinning the lip, 9, over the bead, 8.

The substance of which the bond is composed is, preferably, a prepared shellac which is fully described in United States Letters Patent #1,309,967, granted to Simonson and Blair on July 15, 1919. This substance is of especial utility as a bond inasmuch as it may be fused in situ at a temperature which is lower than the temperature at which glass fuses and, by sufficient heat treatment at normal pressures, becomes, exceedingly tenacious and permanently adherent to the neck of the jacket and the container. The substance is ground before it is applied, and when heated it fuses and becomes sticky and immediately attaches itself to the adjacent parts. Prolonged heating hardens it, renders it substantially insoluble in alcohol, and materially raises or eliminates its melting point, so that its durability as a bond is ensured. The tenacity of this bond is such that it is capable of supporting the container in its pendent position with the jacket without the aid of adjunctive supporting devices. The filling between the jacket and the container is primarily employed as a shock-absorber and an insulator, and for the purpose of preventing the container from responding to external shocks

which, if of sufficient intensity, would cause the container to oscillate to such extent, relatively to the jacket, as to fracture its neck. Experiments have shown that the bond will remain intact and adherent to the parts even when contiguous portions of the glass of the container are broken by a shock.

It is important that the inner container be composed of a substance which is a poor conductor of heat, so that heat will not be readily transmitted upward through the body of the container to the outer jacket from which it is suspended. Although the bonding material constituting the seal is itself a poor conductor of heat, it is desirable to supplement its non-heat transmitting properties as much as possible.

Having thus described my invention, what I claim is:

1. A heat-insulated vessel of the non-vacuum type having an outer jacket of non-frangible material, an inner container of frangible material, said inner container being bonded to and pendently supported from said jacket, and heat-insulting and shock-absorbing means surrounding said container for limiting oscillations of said container while permitting expansion thereof by changes of temperature.

2. A heat-insulated vessel having a transversely divided outer jacket of non-frangible material, an inner container of frangible material bonded to the upper portion of said jacket and pendently supported thereby, a lining disposed within and substantially coextensive with said jacket, and a comminuted body of heat insulating and shock-absorbing material disposed between said container and said lining for limiting oscillations of said container while permitting expansion thereof by changes of temperature.

3. A heat-insulated vessel of the non-vacuum type, having an outer non-frangible jacket provided with a neck and consisting of a plurality of parts united by a circumferential spun seam, a strong inner frangible container having a neck which is sealed to the neck of said jacket, and a packing of shock-dispersing and heat-insulating material enveloping said container and of sufficient thickness to prevent indentations or distortions of said jacket from exerting a breaking pressure on said container, whereby oscillation of said container is limited and expansion thereof by changes of temperature permitted.

4. A heat-insulated vessel of the non-vacuum type having a non-frangible outer jacket, an inner frangible container, and a bond uniting said jacket and said container at their upper ends and sustaining said container in a pendent position within said jacket, said jacket and said container being sufficiently spaced to prevent indented or distorted portions of said jacket from touching said container.

5. A heat-insulated vessel of the non-vacuum type having a two-part outer jacket, an inner container of non-corrosive material bonded directly to and pendently sustained by said outer jacket, and a comminuted packing, disposed around said container to limit pendulous movements of said container while permitting expansion and contraction thereof by changes of temperature.

6. A heat-insulated vessel having a non-frangible outer jacket provided with a top portion and a bottom portion each formed with a cylindrical wall and united by a circumferential joint, and an intergral non-corrosive inner container united to said top portion by an adherent bond, and supported by said bond in a pendent position.

7. A heat-insulated vessel consisting of a divided outer jacket, a single-wall container, a bond directly uniting the

tops of said jacket and said container and sealing the space within said jacket, and cushioning means, said cushioning means substantially filling the space between said jacket and said container and having low heat conductivity for insulating said container and for limiting pendulous movements thereof.

8. A heat-insulated vessel having an outer jacket and an inner container provided with a neck, a body of heat-insulating material surrounding said container and a closure for and engaging the neck of said container and separated from the inner wall of said neck by a heat-insulating air space.

9. A heat-insulated vessel having an outer jacket and an inner single-wall container provided with a neck, a body of heat-insulating material surrounding said container, a closure for the neck of said container separated from the inner wall of said neck, by a heat-insulating air space and a heat-insulating gasket disposed between said neck and said closure.

10. A heat-insulated receptacle of the non-vacuum type, including a multi-part outer jacket having an inturned portion at its upper end, a single-walled strong inner frangible container having a neck surrounded and laterally sustained by said jacket, and resilient heat-insulating material disposed between said jacket and said container and extending from the inner wall of said jacket to the outer wall of said container for limiting the oscillation of said container while permitting expansion thereof by changes of temperature.

11. A heat-insulated vessel of the non-vacuum type, having a non-frangible multi-part outer jacket, an inner strong single-walled container of low heat conductivity pendently sustained in and separated at all points from

said outer jacket by heat-insulating material which limits oscillation of said container while permitting expansion thereof by changes of temperature.

12. A heat-insulated vessel of the non-vacuum type, having a non-frangible outer jacket, a strong inner single-walled frangible container of low heat conductivity pendently sustained in said jacket and separated at all points below the point of suspension in said outer jacket by heat insulating material for limiting oscillation of said container while permitting expansion thereof by changes of temperature.

13. A heat-insulated receptacle of the non-vacuum type, including a non-frangible outer jacket, a strong inner vitreous container supported in the upper portion of said outer jacket, and a comminuted heat-insulating material disposed between said jacket and said container for limiting oscillation of said container while permitting expansion thereof by changes of temperature, said container having sufficient opacity to substantially conceal said insulating material.

14. A heat-insulated receptacle of the non-vacuum type, having a non-frangible outer jacket, a strong inner single-walled container of frangible material, said inner container being pendently sustained in said jacket, and heat-insulating and shock-aborbing means surrounding said container for limiting its oscillation while permitting expansion thereof by changes of temperature.

15. A heat-insulated receptacle including an inner vitreous container, a sectional outer jacket, heat insulating material disposed between said container and jacket, and a retainer for holding said insulating material in place pending the placing in position of a section of the outer jacket.

16. A heat-insulated receptacle of the non-vacuum type, including an outer non-frangible jacket, a strong inner

vitreous container supported in the upper portion of said jacket, and heat insulating material disposed between said container and said jacket for limiting oscillation of said container while permitting expansion thereof by changes of temperature, said container having an outside coating of silver to render it opaque and reflective of heat rays.

17. A heat-insulated receptacle of the non-vacuum type, including a multi-section outer jacket, a strong vitreous single-walled inner container sustained in the upper portion of said outer jacket, resilient heat-insulating material disposed between said jacket and said container for limiting oscillation of said container while permitting expansion thereof by changes of temperature, one section holding a cover, and a seal to prevent moisture from reaching said insulating material.

18. A heat-insulated receptacle of the non-vacuum type, including a multi-section outer jacket, a strong vitreous single-walled inner container sustained in the upper portion of said outer jacket, resilient heat-insulating material disposed between said jacket and said container for limiting oscillation of said container while permitting expansion thereof by changes of temperature, a screw-threaded section for holding a cover, and a seal for preventing moisture from reaching said insulating material.

19. A heat-insulated receptacle including a multi-section outer metallic jacket, a vitreous inner container, heat-insulating material disposed between said jacket and said container, and a vitreous stopper carrying a resilient gasket, said stopper being retained in position by a cup engaged with a section of said outer jacket.

20. A heat-insulated receptacle including a multi-section outer metallic jacket, an opaque vitreous inner con-

tainer, heat-insulating material disposed between said jacket and said container, and a vitreous stopper having a recess carrying a resilient gasket, said stopper being retained in position by a cup engaged with a section of said outer jacket.

21. A heat-insulated receptacle of the non-vacuum type, including a multi-section outer jacket, a vitreous open-mouth single-walled inner container sustained in the upper portion of said outer jacket, resilient heat-insulating material disposed between said jacket and said container for limiting oscillation of said container while permitting expansion thereof by changes of temperature, and an insulated stopper for closing the mouth of said container, a section of said outer jacket having means for holding and vertically adjusting a cover.

22. A heat-insulated receptacle of the non-vacuum type, including a non-frangible outer jacket, a strong inner frangible container having a body portion and a neck, said neck being held laterally by an upper part of said receptacle, and additional means for laterally holding said body portion and for restricting convective air currents around said container, said means consisting of comminuted heat-insulating material surrounding said body portion to thereby substantially prevent lateral movements of said body portion.

23. A heat-insulated receptacle of the non-vacuum type, including a non-frangible outer jacket, an inner frangible container having a neck, the neck of said container being laterally positioned by an adjacent part of said jacket, and the body of said container being laterally sustained in the body of said receptacle by a mass of comminuted heat-insulating material disposed in the space between said bodies to restrict convective currents of air

therein and to limit the amplitude of pendulous movement of the body of said container.

24. A heat-insulated receptacle of the non-vacuum type, including a non-frangible outer jacket, a strong inner frangible container positioned at its upper end by an adjacent part of said jacket, and heat insulating material disposed within said jacket, filling the space between said jacket and said container and of sufficient density to substantially prevent said container from whipping, vibrating or oscillating at its lower end.

In testimony whereof he affixes his signature in the presence of two witnesses.

LEWIS VAN DEVENTER BLAIR.

Witnesses:

CARL J. POWERS,

B. E. FACTOR.

APPENDIX B

No. 3812

UNITED STATES CIRCUIT COURT OF APPEALS

FOR THE SEVENTH CIRCUIT

OCTOBER TERM, 1926, APRIL SESSION, 1927.

MACOMB MANUFACTURING COMPANY, *Appellant*,
vs.
THE MANTLE LAMP COMPANY OF AMERICA, *Appellee.*

Appeal from the District Court of the United States for the Southern District of Illinois, Northern Division.

May 28, 1927.

BEFORE ALSCHULER, EVANS and ANDERSON, *Circuit Judges.*

ANDERSON, Circuit Judge: This is an appeal from a decree holding patent No. 1,435,199, issued to the appellee as assignee of Lewis Van Deventer Blair, valid, and claims 1, 4, 5, 6, 7, 10, 11, 12, 13, 14, 17, 18, 21, 22, 23 and 24 thereof infringed.

Appellee, in its brief, after differentiating these 16 claims, says they "are not redundant, but define one or

another of the aspects of the invention." 1 and 17 are put forth as "examples" of the claims. These are:

> 1. A heat-insulated vessel of the non-vacuum type, having an outer jacket of non-frangible material, an inner container of frangible material, said inner container being bonded to and pendently supported from said jacket, and heat-insulating and shock-absorbing means surrounding said container for limiting oscillations of said container while permitting expansion thereof by changes of temperature.
>
> 17. A heat-insulated receptacle of the non-vacuum type, including a multi-section outer jacket, a strong vitreous single-walled inner container sustained in the upper portion of said outer jacket, resilient heat-insulating material disposed between said jacket and said container for limiting oscillation of said container while permitting expansion thereof by changes of temperature, one section holding a cover, and a seal to prevent moisture from reaching said insulating material.

The patent says: "The invention relates to receptacles of the heat-insulated, non-vacuum type." Such receptacles are found in prior patents. We will therefore consider this case without reference to the heat-insulated, vacuum receptacles so common when the patent was issued.

After stating, in general terms, the state of the art at the time of Blair's application, appellee says: "The problem, therefore, which confronted Blair, * * * was the production of a receptacle, without the intervention of a vacuum and of relatively large size, for the maintenance for many hours of a desired high or low temperature of food or liquid contents, and of a better shock-resisting character."

This problem, in the language of appellee, was solved by the following means:

> "His receptacle includes a metallic protective jacket and a single wall container."
>
> "This container is fixedly and firmly connected at its upper end with the top of the outer metal jacket by means of a bond."
>
> "The space between the jacket and the body of the inner container, as distinguished from the neck portion, contains comminuted material, which material impedes the transfer of heat by induction between the inner container and the jacket and limits the pendulous vibrations of the container within the jacket."
>
> "The comminuted material, if allowed to become moist, would be a good conductor of heat. But moisture is kept therefrom by an inturned flange extending from the neck of the jacket, which flange while acting as a seal also protects the frangible neck of the container and positions the container in the jacket while the parts are being assembled. The means constituting a bond and also acting as a seal, which hold the neck of the container in place within the neck of the jacket, also operates to prevent moisture from reaching the comminuted material, in case moisture should pass between the flange and the neck of the container."

And appellee continues:

> "It will thus be seen that all of the elements above enumerated are tied together in a true combination producing a single and useful result and that if any one element, the jacket, the container, the spacing, or the packing were omitted, or some sealing means were not used to keep moisture away from the packing, and

to pendently support the container so that only one path of heat conductivity is afforded, the device would not be such as efficiently to perform its intended functions."

The prior art discloses heat-insulated and shock-resisting receptacles of the non-vacuum type. Prior patents show each of the elements enumerated by appellee. We need only to call attention to three, which appear in the record: No. 211,092, issued to Heath, January 7, 1879; No. 358,732, issued to Clisbee, March 1, 1887; and No. 438,149, issued to Fox, October 14, 1890.

Heath calls his invention "an encased bottle," and says: "the object sought for being the prevention of breakages during transportation." This is the shock-resisting object of the patent in suit. Heath discloses an outer jacket, a single wall container, spacing between the jacket and the container, and the packing therein. The container had its neck extended up through the jacket, and the jacket and the container connect or contact with each other only at the extreme end of the neck. At no other point is the container in contact with the jacket. So far, Heath describes the construction of the patent in suit.

Clisbee calls his invention an "insulated can," and says:

"The object of this invention is to furnish an improved insulated can for coffee and other beverages * * * so that the liquid may retain its heat * * *." Clisbee has the outer jacket, the inner single wall container, the spacing between the jacket and the container, the packing in the spacing, and the neck of the container connecting with the jacket at the upper end of the neck and nowhere else. Blair positions these elements as they are positioned in Heath's and Clisbee's patents.

In these two patents we have disclosed every element claimed to be in the patent in suit, except the bond or bonding means which appellee says holds the container firmly and fixedly, pendently positioned in the jacket. This use of a bonding means to thus hold the container firmly and fixedly in its position, and also to prevent moisture from getting into the packing, is disclosed in the Fox patent.

This Fox patent is for a carboy, and shows an outer jacket, called a box or frame, a single wall container inside the jacket with a neck extending up through the jacket, and packing between the container and the jacket, and the patentee says: "Around this neck of the carboy I tightly pack plaster-of-paris or other suitable material, as shown at B (in the drawing), for the purpose of firmly holding the carboy in place, * * * and also for the purpose of excluding moisture or water." And, again: "B is a packing of plaster-of-paris or other suitable material, intended to hold the carboy firmly in place within the box or frame enclosing it and to exclude water or moisture from the packing C."

Thus we have all the elements in appellee's claims disclosed in these three prior patents, each operating in its old way and effecting its old result, and the only question to be decided is: Did it involve invention for Blair to take the bond from Fox and the other elements from Heath or Clisbee, or both of them, and assemble them in one heat-insulated, non-vacuum receptacle?

With Heath, Clisbee and Fox in the field—Heath and Clisbee both showing (except the bond between the container and the jacket) the construction adopted by Blair, Heath's object being shock resistance and Clisbee's heat insulation, both using the same means and construction—did it involve invention to take Fox's bond and add it to

Heath or Clisbee? We think this involved mechanical skill, and not inventive genius. In the language of the Supreme Court in *Hollister* v. *Benedict Mfg. Co.*, 113 U. S. 59, on page 73, 5 S. Ct. 717, 724, (28 L. Ed. 901): "It is but the display of the expected skill of the calling, and involves only the exercise of the ordinary faculties of reasoning upon the material supplied by a special knowledge, and the facility of manipulation which results from its habitual and intelligent practice." A person skilled in the art pertaining to heat-insulated receptacles of the non-vacuum type, knowing what had been done before, and seeing these various elements performing their functions in the patents above mentioned, would not require a flash of genius to combine with the structures shown by Heath or Clisbee a bond to hold the container in position and at the same time prevent moisture from getting into the insulating packing.

We are not now concerned with the particular bond set forth in appellee's patent, which says: "The substance of which the bond is composed is, preferably, a prepared shellac which is fully described in United States Letters Patent No. 1,309,967, granted to Simonson & Blair on July 15, 1919." If appellant used the bond described in that patent, for such use the suit should be for its infringement; but it is not claimed that appellant used this particular bond. It used plaster-of-paris, or a mixture of plaster-of-paris and cement or white lead, none of which, singly or combined, is the bond of appellee.

The result obtained by Blair may be a better structure than was ever before produced, and yet, for the lack of novelty of device, or new result produced, it may have no patentable quality. He has assembled—combined, in the ordinary sense—old and well-known elements, but he has not made an invention.

Reversed, with direction to dismiss the bill of complaint for want of equity.

A true Copy; Teste.

EDWARD M. HOLLOWAY,
Clerk of the United States Circuit Court of Appeals for the Seventh Circuit.

(SEAL)
(United States Circuit Court)
(of Appeals, Seventh Circuit.)

Rehearing denied Dec. 5, 1927.

APPENDIX C

No. 3889

UNITED STATES CIRCUIT COURT OF APPEALS

FOR THE SEVENTH CIRCUIT

OCTOBER TERM, 1926, APRIL SESSION, 1927.

MONARCH COMPANY, INC. AND THERM-A-JUG COMPANY, INC.
Appellants,

vs.

THE MANTLE LAMP COMPANY OF AMERICA,
Appellee.

Appeal from the District Court of the United States for the Northern District of Illinois, Eastern Division.

May 28, 1927.

Before ALSCHULER, EVAN A. EVANS, and ANDERSON,
Circuit Judges.

ANDERSON, Circuit Judge: Appellants filed suit against appellee for unfair competition in the sale of heat-insulated receptacles designed to keep hot liquids hot and cold liquids cold. Appellee filed a counterclaim charging that plaintiffs, in making their receptacles, infringed patent No.

1,435,199, owned by appellee and considered in the case of *Macomb Manufacturing Co.* v. *Mantle Lamp Co.*, (No. 3812) 22 F. (2d) 93, decided this day.

The court dismissed the bill of complaint for want of equity, upheld the counterclaim, and adjudged the patent valid and infringed as to the same claims relied on in No. 3812. The only question presented upon the issue of unfair competition is whether the decree was right upon the evidence. We have examined the evidence, and are satisfied that it does not warrant a decree for appellants upon this issue. That part of the decree dismissing the bill of complaint is affirmed.

But we cannot approve the decree upon the patent branch of the case. For the reasons stated in our opinion in the *Macomb* Case, we hold the patent invalid. This part of the decree is reversed, with direction to dismiss the counterclaim. Costs shall be divided equally between the parties.

APPENDIX D

Filed Nov. 3, 1931
John W. Menzies,
Clerk.

No. 2506

UNITED STATES CIRCUIT COURT OF APPEALS

SIXTH CIRCUIT

THE MANTLE LAMP COMPANY OF AMERICA,
Appellant,
vs.
GEO. H. BOWMAN COMPANY,
Appellee.

Appeal from the District Court of the United States for the Northern District of Ohio.

Decided November 3, 1931.

Before DENISON AND MOORMAN, *Circuit Judges, and* SIMONS, *District Judge.*

DENISON, Circuit Judge: This is the usual patent infringement suit, based upon the Blair patent, No. 1,435,199, of November 14, 1922, for a "heat insulated receptacle." It discloses the type now common on the market, which

comprises a large mouthed receptacle, holding a gallon or more, insulated within an outer casing which is in the general form of a pail or a large bottle, and which efficiently keeps a substantial amount of food or drink hot or cold for several hours. The patent was sustained in the *Monarch* and the *Macomb* cases, in the Northern District of Illinois (unreported), but these decrees were reversed by the Seventh C. C. A., (22 Fed. (2d) 93, 95), and the patent was held to be lacking in invention.

In the present case, the defendant filed an answer relying upon the former decision and setting up a long list of earlier patents. It did not take proofs and did not appear at the final hearing in the court below. The plaintiff voluntarily put in evidence all the patents set up in the answer. The District Judge felt obliged to follow the earlier decision, and dismissed the bill. Upon this appeal the defendant did not appear; and we accept the assurance of plaintiff's counsel that they know of no reason for defendant's default except lack of sufficient pecuniary interest. At our suggestion, we have been furnished with copies of the records and of the briefs in the former cases, and have thus been quite fully informed as to the proofs and the contentions therein.

The modern art of efficient insulated receptacles for domestic use seems to have been begun about 1907, with the now very familiar thermos bottle, and with similar structures known as "icy-hot", or by other names. These comprised a double wall of glass with an intervening vacuum; from necessities of manufacture they were very delicate and fragile; and they had usually no greater capacity than one quart; though a two-quart size was made to some extent. Beginning about 1907, this vacuum type for keeping liquids hot or cold, became exceedingly popular. The invention now involved was put upon the market

about 1918, under the trade name "Aladdin." It comprised a much larger receptacle, holding from one up to three or four gallons, and, by reason of its size and permissible large neck, was adapted to keep hot or cold not only liquids but solid or semi-solid food. It was well received and had large and increasing sales. Within a short time, it and similar articles made by others, and which are said to be infringements, had established their position as practically a new article of manufacture, and plaintiff was far and away the leader in the sales. Up until the proofs were taken it had sold over one million of them.

What Blair did, in substance, was to depart from the vacuum type; to rely for his heat insulation upon a relatively non-conducting packing between his outer and inner walls; to use an outer casing made of metal, which would be strong enough to receive ordinary shocks, and an inner container made of glass or some vitreous material that would allow the minimum of heat to escape therefrom; and to unite the outer and inner casings at their upper or neck ends, so that the inner would be pendently supported by the outer and so that the uniting means or bond should also serve as an insulator against heat or cold and as a seal to exclude air or moisture from the packing material. He was thereby enabled to, and was the first who did, put on the market a strong and satisfactorily efficient portable insulated jar or can, of relatively large size. There was, of course, nothing new in having merely the outer and inner vessels, with a packing between; but both the face of the patent and a review of the prior art and the oral testimony, indicate that Blair's useful novelty, which is incorporated in several of the claims, and which we take to be the dominant characteristic of his invention, consisted in hanging the inner container to the outer shell at the upper extremity of each by a bond which was suffi-

cient for this supporting function and which also served the essential insulating and sealing purposes. He was thus enabled to avoid relying upon the packing material for supporting the inner container from below—a function which it could only imperfectly perform,—and to avoid any extensive contact between the inner receptacle and the outer casing, whereby there would be any substantial channel for the escape of heat. Obviously, the use of a bonding material between the two instead of having any mechanical direct union, gave opportunity for interposing a comparatively non-conducting material. So far as the record indicates, there is no material used by the plaintiff or by infringers, which is suitable for this bond, which is not also, in considerable degree, heat insulating.

Claim 1 is given in the note,[1] and is sufficient to indicate the limits of the controversy. For the outer and inner containers, the parties have not used any materials other than metal for the outer and a vitreous or glasslike material for the inner. There is nothing to show that the more generic terms, non-frangible and frangible, have practically any wider application which might extend the field of prior use. The claim may, therefore, as well be read as if it called for containers that were respectively metallic and glassy.

The record leaves no doubt that Blair's combination was new, and its utility is demonstrated by the large sales and

---

[1]A heat-insulated vessel of the non-vacuum type, having an outer jacket of non-frangible material, an inner container of frangible material, said inner container being bonded to and pendently supported from said jacket, and heat-insulating and shock-absorbing means surrounding said container for limiting oscillations of said container while permitting expansion thereof by changes of temperature.

the adoption by infringers. The argument against validity is that all the elements were old and there was no invention in putting them together. The earlier existence of the elements must be conceded; outer metallic casings used with an inner glass receptacle and with interposed insulating packing were old; metal and glass had been bonded together for some purposes and to some extent by material which would adhere to each; and an inner receptacle of bottle shape had been hung by its neck from the indrawn neck of an outer casing through mechanical direct contact. All these constructions had defects which apparently had prevented them,—something had,—from going into general use. The packing interposed between the outer and inner parts was certain to become, with use, somewhat denser and to leave the inner imperfectly supported and subject to jar and breakage. If the inner receptacle had its neck extended out so that it would rest upon the outer casing, and might, *e. g.*, be soldered thereto, a path was given for the escape of heat. By adopting the plan of pendent support, Blair insured against failure of the interposed packing to support sufficiently, and by effecting this support by a bond between the two, rather than by a mechanical union, and by using for the bond this described material, or any other which has been found effective for that purpose, he at the same time gave support, prevented the escape of heat and sealed out the air and moisture from the packing. Further, this method of bond support was mechanically more efficient and satisfactory than the other methods which had been tried.

The substantial character of Blair's step and its non-obviousness, are demonstrated by the testimony. The manager of a leading manufacturer of bottles of the thermos or vacuum type, testifies that when they realized the demand for larger receptacles, they tried to enlarge

their thermos bottle, the "icy-hot," using its method of manufacture, and they found it impossible. The mechanical difficulties of handling hot glass in the manufacturing process, so as to produce a large and heavy receptacle, were insuperable. Thereupon, in the endeavor to make an article to compete with the Aladdin, then on the market, without adopting the pendent-bond-support, they tried the best plan they knew. They inserted between the two bottoms supporting springs, which would hold the upper one against vibration and compensate for any settling in the packing; but when they produced this article for the market, they found the best they could do was to maintain the temperature three or four hours, as against six or eight for the Aladdin. The manager says that for his own use he discarded his own and bought an Aladdin. The attempt to market this article was abandoned.

The manager at the time, of the McComb Company, one of Blair's chief early competitors and defendant in one of the Illinois cases, testifies in this record. The McComb Company began to make this non-vacuum type in 1921 (the Blair patent application was filed in 1919) and sold about 1500 of its devices, which had an earthenware container supported at the neck by the indrawn neck of the metallic casing. There was no bond or seal,—at least, not in any effective way. This form did not satisfy the market, after one season's trial, it was abandoned and Blair's patent-bond-support adopted.

The record in the *Monarch* case contains, in our view, most persuasive evidence that Blair's advance step was not one obvious to those skilled in this art. The Monarch Company was engaged for two or three years in the effort to make a satisfactory article to meet the need for a larger and stronger "thermos bottle." Its mechanics,—certainly skilled,—tried several different forms, marketed

some, abandoned them, and eventually came to and adopted Blair's pendent-bond-support form, a year or more after the Aladdin was on the market. A summary of this evidence is in the note.[2]

We thus find that in accomplishing this combination of old elements to make a new market article, there had been

---

[2]In 1918 the Monarch Company began its attempt to develop the non-vacuum type so as to get a relatively large container. It was without knowledge of Blair's idea. It used an ordinary Mason jar, packed in a casing with interposed insulation and with a metal tube for filling and emptying, extended from the jar cover up through the open top of the outer container and soldered thereto. There was thus (perhaps) the pendent support, but no combination of metal and glass, by such a bond or support by that bond, as Blair provided, and there was an obvious metallic channel for heat escape. About the same time the Monarch people made a second form, using an earthenware container with a neck and a metallic outer jacket conically drawn in at its neck and closely surrounding the projecting earthenware neck, but there was no attempt at insulation at this point between the two, or support of one by the other, but for this support the interposed packing material was relied upon. As this could not maintain resilience, the structure was certain to be inefficient as well as heat conveying. They planned to manufacture this on a large scale, but very soon discarded it. About July, 1918, they tried a third form, upon which, in December, they filed an application for a patent (later abandoned). This was like the second form just described, except that spring supports were interposed between the two bottoms to hold the inner container up in position (like the trial form experimentally produced by the "icy-hot"). This could hardly be satisfactory; the springs could not hold the inner jar motionless, there was no bond or seal at the necks, moisture and air would enter the packing material and both the direct contact of the two necks and the lower springs would make troublesome heat conveyers. In March, 1919, they

not only the delay of thirty or more years since the old patents now said sufficiently to teach the combination (though during most of this period there was no foreseen public demand for a thing of this kind), but there had been, after the demand was known, two or three years of effort

---

filed another patent application on a fourth and slightly different form. It lacked springs, but it had the other recited defects. They had not felt justified in trying to market any of these four forms. A fifth form, adopted October, 1919, was put upon the market. This was like numbers 3 and 4, except that they endeavored to avoid the heat escape at the contact point of the two necks by interposing a rubber gasket. There was no suggestion of bond or pendent support. There was a form of sealing by this gasket, but nothing to compel contact so as to make the seal effective. During 1919 and 1920, they marketed some 7,000 jugs of this type, of which nearly half were returned as unsatisfactory. In the fall of 1920, they substituted for number 6, form number 7. This was an elaboration of the rubber gasket idea. In addition, the inner jar was pendently supported at the neck by a screw thread engagement with the cap which was in contact with the outer container. Here again there was a heat losing contact between the inner and outer parts, and nothing resembling a supporting insulating bond between the two. As a sealing means, the rubber gasket was inefficient because it would be released whenever the cap was taken off. They manufactured and sold this form with some success for two years. Just at what time they had knowledge of the Blair construction does not appear, but in 1923, they abandoned number 7 and adopted the Blair idea of pendent-bond-support. They discarded their rubber gasket seal and separable two-part form of the outer casing; they abandoned direct contact between the two necks, enlarged the outer one so as to get an intermediate space, and filled this in with a composition which was both bond and seal and which caused the inner to be pendently supported by and from the outer.

by Blair's competitors to satisfy it by using their best skill in various combinations other than his, and we see that eventually one of them dropped out and the other two were compelled to use Blair's system of bond support for the pendent inner container. Seldom is there a record of failure by other things and success by the patented means, more helpful than this is, upon the issue of invention.

We do not overlook the problem presented by the form of the claim. The functions of the bonding material, as an insulator to interrupt the flow of heat and as a seal to exclude air and moisture from the packing, are not specified in the claim, although they are of considerable importance, (we do not say vital), in distinguishing from the prior art.

We think this patent is entitled to a fairly liberal construction in aid of its validity and ought not to be defeated by any unnecessary adherence to technical rules. We think also that the always implied "substantially as described" and the doctrine of interpretation by the specifications, justify regarding the "bond" of the claim as one which does effectively insulate the outer and inner members. The patent specifies, in line 61 of page 1, that the bonding substance shall be of low heat conductivity, and the succeeding lines emphasize that it is to be incapable of transferring much heat or cold from one to the other. Its "non-heat transmitting properties" are again emphasized in line 115 of page 2. To import this limitation into the claim is not to bring in an additional element. It is only to interpret with the aid of the specification one of the words of the claim, so that it may not be thought so broad as to be destructive.

How far the sealing quality should also be implied in the claim in aid of its validity, it does not seem necessary to decide. Nor need we decide just what would or would not be

the supporting bond contemplated by the claim. In defendant's form, the material of the bond is a sulphur composition. It is strongly adherent, both to glass and metal. It seems probable that it would, unaided, sufficiently support the pendent receptacle; but its operation is aided by providing grooves in the outer surface of the inner and the inner surface of the outer necks into which grooves the bonding composition enters, and which grooves therefore aid in preventing any slippage as between the two members. This construction renders it less vital that the bonding material should adhere, efficiently to smooth glass and smooth metal, as shown in the structure of the patent drawings; but the testimony of the experts that there is infringement is not disputed, we have no argument on the subject, and we think, for the purposes of this record, we should find that infringement exists.

The Seventh Circuit Court of Appeals relied upon three old patents as the most pertinent out of the many cited by defendant in that case, and expressed the view that in selecting elements from these three and combining them, as Blair did, there was no invention. Even if this were a case where the lack of invention could be spelled out in this way, the patents do not seem to us sufficient for that result. *Clisbee,* No. 358,732, March 1, 1887 relates to a double wall metallic can for keeping coffee hot. The inner can is pendently supported by an upturned flange on its neck resting against the indrawn collar of the outer can, and the parts are screw-clamped together. There is no suggestion of bond or seal. The loss of heat from the direct contact of the two metal parts is obvious. The other two patents relied upon (*Heath,* No. 211,092, January 7, 1879, and *Fox,* No. 438,149, October 14, 1890) do not relate at all to heat insulation. They consist essentially of packing boxes to prevent the enclosed bottle from being broken

in transportation. They do not have, in an effective sense, any bond or seal. Fox shows a wooden packing case, for transporting a glass carboy. He furnishes support apparently only from below by an interposed packing. It is true that between the neck of the carboy and the surrounding hole in the top of the wooden box, Fox puts in plaster-of-Paris and says that it is "to exclude water or moisture." There was thus the thought of a seal, but the proof is that plaster-of-Paris alone does not effectively exclude air or moisture, and that it would not adhere to the wood and glass so as to support the heavy carboy. It never was intended to give pendent support. Heath, likewise, who has only a bottle cased for shipping, and whose entire stated object was to prevent breakage, has no pendent support and no bond or seal.

The leading decisions on the subject of invention are too familiar for citation. Their application depends on the facts of each case. We are constrained to the other conclusion from that reached by the Seventh Circuit Court of Appeals. It may well be noted that the testimony of two competitors, showing their unsuccessful efforts to get Blair's result by other means, was not in these McComb and Monarch records, and this proof is so important that it alone goes far toward justifying a different result here.

We have considered only claim 1. There are other claims which are broader in some respects and do not incorporate the supporting bond. They thus present questions of validity which we have not discussed. Some other claims are narrower and suggest questions of infringement. We see no object, upon this record, in considering any of these claims.

The decree will be reversed and the case remanded, with instructions to enter the usual decree for plaintiff on claim 1, and without prejudice to any rights of the plaintiff under any other claim.

APPENDIX E

Sec. 4917 Rev. Stat.; 35 U. S. C. A. 65. Whenever, through inadvertence, accident, or mistake, and without any fraudulent or deceptive intention, a patentee has claimed more than that of which he was the original or first inventor or discoverer, his patent shall be valid for all that part which is truly and justly his own, provided the same is a material or substantial part of the thing patented; and any such patentee, his heirs or assigns, whether of the whole or any sectional interest therein, may, on payment of the fee required by law, make disclaimer of such parts of the thing patented as he shall not choose to claim or to hold by virtue of the patent or assignment, stating therein the extent of his interest in such patent. Such disclaimer shall be in writing, attested by one or more witnesses and recorded in the Patent Office; and it shall thereafter be considered as part of the original specification to the extent of the interest possessed by the claimant and by those claiming under him after the record thereof. But no such disclaimer shall affect any action pending at the time of its being filed, except so far as may relate to the question of unreasonable neglect or delay in filing it.

Sec. 4922 Rev. Stat.; 35 U. S. C. A. 71. Whenever, through inadvertence, accident, or mistake, and without any wilful default, or intent to defraud or mislead the public, a patentee has, in his specification, claimed to be the original and first inventor or discoverer of any material or substantial part of the thing patented, of which he was not the original and first inventor or discoverer,

every such patentee, his executors, administrators and assigns, whether of the whole or any sectional interest in the patent, may maintain a suit at law or in equity, for the infringement of any part thereof, which was *bona fide* his own, if it is a material and substantial part of the thing patented, and definitely distinguishable from the parts claimed without right, notwithstanding the specifications may embrace more than that of which the patentee was the first inventor or discoverer. But in every such case in which a judgment or decree shall be rendered for the plaintiff no costs shall be recovered unless the proper disclaimer has been entered at the Patent Office before the commencement of the suit. But no patentee shall be entitled to the benefits of this section if he has unreasonably neglected or delayed to enter a disclaimer.

FILE COPY

IN THE

SUPREME COURT OF THE UNITED STATES

OCTOBER TERM, A. D. 1935.

No. 590.

THE MANTLE LAMP COMPANY OF AMERICA,

VS.

ALUMINUM PRODUCTS COMPANY.

ON CERTIFICATE FROM THE UNITED STATES CIRCUIT COURT OF APPEALS FOR THE SEVENTH CIRCUIT.

BRIEF OF APPELLEE.

WM. NEVARRE CROMWELL,
Counsel for Appellee.

JAMES L. McMANUS,
Of Counsel.

Eastman Bros., Inc., Law Printers, 542 S. Dearborn St., Chicago.

INDEX.

Opinions below 2
Jurisdiction 2
Statement of the case 2
Questions presented 6
The statutes involved 7
Introduction to argument 7
SUMMARY OF ARGUMENT 9
ARGUMENT 10
Point I. The facts of this case and the facts of the Ensten case strictly applying the disclaimer stautes parallel one another 10
Point II. The disclaimer statutes are applicable to the facts of this case 12
Point III. By the very wording of the disclaimer statutes they are jurisdictional in their nature 13
Point IV. Claims held invalid for lack of invention are within the disclaimer statutes 14
Point V. Specific disclaimers to some of the claims of the patent do not affect claims remaining in the patent 15
Point VI. The technicalities urged by appellant do not take the facts of this case from within the disclaimer statute nor excuse delay in filing disclaimers thereunder 19
Analysis of appellant's citations urged in support of appellant's Point II 22
Conclusion 28

Appendix—Disclaimer statutes:
R. S. 4917; 35 U. S. C. A. 65 31
R. S. 4922; 35 U. S. C. A. 71 31

Cases Cited.

Abercrombie & Fitch *v.* Baldwin, 245 U. S. 198; 38 S. Ct. 104 23
Altoona Publix Theatres, Inc. *v.* American Tri-Ergon, Inc., 294 U. S. 477, 489, 490; 55 Sup. Ct. 455, 460 18
Corona Tire Co. *v.* Doran Chemical Corporation, 276 U. S. 358; 48 S. Ct. 380 27
Diamond Rubber Co. *v.* Consolidated Rubber Tire Co., 220 U. S. 428; 31 S. Ct. 444 22

Dowagiac Manufacturing Company *v.* Minnesota-Moline Plow Co., 235 U. S. 641; 35 S. Ct. 221 23
Ensten *v.* Simon, Ascher & Co., 282 U. S. 445; 51 Sup. Ct. 207 ..... 7, 9, 10, 12, 13, 20, 21, 28, 29
Expanded Metal Co. *v.* Bradford, 214 U. S. 366; 29 S. Ct. 652 22
Gill *v.* Wells, 89 U. S. (22 Wall.) 1 18
Graham *v.* Earl, 92 Fed. 155, 159 ..... 10, 16
Hoe & Co. *v.* Goss Printing Press Co., 31 Fed. (2d) 565 ..... 9, 13, 20, 23, 28
John E. Thropp Sons Co. *v.* Sieberling, 264 U. S. 320; 44 S. Ct. 346 26
Liquid Carbonic C[illegible] Gilchrist Co., 253 Fed. 54, 58 ..... 9, 13, 28
Macomb Manufacturing Company *v.* The Mantle Lamp Company of America, 22 F. (2d) 93 ..... 2, 3
Mantle Lamp Company of America *v.* The George H. Bowman Company, 53 F. (2d) 441 2
Meccano Limited *v.* John Wanamaker, 253 U. S. 136; 40 S. Ct. 463 25
Monarch Company, Inc., *et al. v* The Mantle Lamp Company of America, 22 F. (2d) 95 ..... 2, 3
New York Scaffolding Co. *v.* Chain Belt Co., 254 U. S. 32; 41 S. Ct. 21 25
Radio Corporation *v.* Radio Engineering Laboratories, 239 U. S. 1; 54 S. Ct. 752 28
Railroad Supply Co. *v.* Elyria Iron & Steel Co., 244 U. S. 285; 37 S. Ct. 502 23
Saranac Automatic Machine Corp. *v.* Wirebound Patents Co., 282 U. S. 704; 51 S. Ct. 232 27
T. H. Symington Co. *v.* National Malleable Castings Co., 250 U. S. 383, 39 S. Ct. 542 24
United States Metallic Packing Co. *v.* Hewitt Co., 236 Fed. 739, 742; denied 242 U. S. 651; 37 Sup. Ct. 243 ..... 10, 16
Vance *v.* Campbell, 66 U. S. (1 Black.) 427 19
Winans *v.* New York & Erie R. R. Co., 62 U. S. (21 How.) 88 ..... 18, 22

Statutes Cited.

Judicial Code, Sec. 239, 28 U. S. C. A. 346 2
Revised Statutes, Sec. 4917; 35 U. S. C. A. 65 7
Revised Statutes, Sec. 4922; 35 U. S. C. A. 71 ..... 7, 8

IN THE

SUPREME COURT OF THE UNITED STATES

OCTOBER TERM, A. D. 1935.

No. 590.

THE MANTLE LAMP COMPANY OF AMERICA,

vs.

ALUMINUM PRODUCTS COMPANY.

ON CERTIFICATE FROM THE UNITED STATES CIRCUIT COURT OF APPEALS FOR THE SEVENTH CIRCUIT.

BRIEF OF APPELLEE.

This cause is before this Court upon a certificate from the United States Circuit Court of Appeals for the Seventh Circuit relative to disclaimers in patent cases. The Mantle Lamp Company of America having designated itself as appellant throughout its brief, the same distinction will be maintained throughout this brief of Aluminum Products Company, defendant in the lower court.

Opinions Below.

There are no published opinions of the Courts below. Certain of the findings of fact and a conclusion of law of the District Court in so far as they are pertinent to disclaimers appear in the Record, page 2. This certificate is before this Court prior to the filing of an opinion in this cause by the Circuit Court of Appeals for the Seventh Circuit.

Opinions in other cases having an important bearing upon the questions certified are as follows:

1. *Macomb Manufacturing Company* v. *The Mantle Lamp Company of America,* 22 F. (2d) 93 (C. C. A. 7).

2. *Monarch Company, Inc., et al.* v. *The Mantle Lamp Company of America,* 22 F. (2d) 95 (C. C. A. 7).

3. *The Mantle Lamp Company of America* v. *The George H. Bowman Company,* 53 F. (2d) 441 (C. C. A. 6).

Jurisdiction.

For jurisdiction of this certificate and the questions therein certified Section 239 of the Judicial Code, as amended; 28 U. S. C. A. 346, is relied upon.

Statement of the Case.

This suit was brought to recover damages and profits occasioned by the alleged infringement of letters patent No. 1,435,199 issued to appellant as assignee of Lewis Van DeVenter Blair for Heat-Insulated Receptacle.

The District Court rendered findings of fact and con-

clusions of law for the appellee and entered a decree dismissing the bill of complaint for want of equity. From that decree an appeal was taken to the United States Circuit Court of Appeals for the Seventh Circuit. After the submission of briefs and argument by counsel, the United States Circuit Court of Appeals for the Seventh Circuit has certified to this Court the several questions relative to disclaimers appearing at the end of this certificate and upon which the Circuit Court of Appeals desires instruction and advice.

The facts necessary to a decision of certified questions Nos. 1 and 2 are simple. Appellant is owner of a patent containing, for the purposes of the present discussion, two groups of claims, which, for convenience of reference as hereinafter more fully set forth, may be denominated A and B. The claims in group A were involved in two suits against parties other than appellant in the District Court for the Southern District of Illinois, Northern Division, and the District Court for the Northern District of Illinois, Eastern Division, respectively.

On appeal the decrees in those cases were reversed and all of the claims in suit, or group A claims, were held to be invalid. *Macomb Manufacturing Company* v. *The Mantle Lamp Company of America*, 22 F. (2d) 93, *Monarch Company, Inc. and Therm-A-Jug Company, Inc.* v. *The Mantle Lamp Company of America*, 22 F. (2d) 95 (R., pp. 2-3). Petitions for rehearing were denied and the mandates issued December 5, 1927. No petition for certiorari was filed in either case. No further effort was made to establish the validity of the claims in those suits (R., p. 3).

Four years and eleven months later, without disclaimers having been filed, appellant brought suit in

the District Court for the Northern District of Illinois, Eastern Division, against appellee for infringement of the claims of group A previously held invalid, as well as certain additional claims embraced in group B. The latter claims had not theretofore been passed upon by the courts of that Circuit or any Circuit Court of Appeals (R., p. 1).

The failure to file disclaimers was set up as a defense in appellee's answer, and, in dismissing the bill of complaint for want of equity, the District Court in the present suit, among other conclusions of law, held that each of the claims of the patent was invalid for unreasonable delay and neglect for filing disclaimers to the claims formerly held invalid (R., p. 2).

Appellant appealed from the decree dismissing the bill for want of equity and the case is now before this Court upon the questions certified.

For the purpose of deciding question No. 3 it will be necessary to consider that during the pendency of the first two suits appellant had brought suit in the Eighth Circuit against a customer (Cutino Company) of a defendant (Monarch Company, Inc.) in one of the earlier suits. Following the holding of invalidity of the group A claims the defendant, Monarch Company, Inc., procured a preliminary injunction restraining appellant from proceeding further in the Eighth Circuit suit against the defendant's customers (R., p. 3).

Shortly after the holding of invalidity of the group A claims by the Court of Appeals for the Seventh Circuit, and before the institution of the present suit, appellant brought suit in the District Court for the Northern District of Ohio, Eastern Division (*Mantle Lamp Company of America* v. *George H. Bowman Company*) upon group A claims plus one of the claims of group B. That court in an unreported decision, following

the Seventh Circuit decision, held all of the claims in suit to be invalid. Upon appeal the District Court was reversed (53 F. (2d) 441) as to claim 1 of group A which claim was held valid and infringed without prejudice to the remaining claims (R., pp. 4-5).

Other than the filing of an answer the defendant in the Sixth Circuit case functioned no further. It did not appear at the trial. It took no proofs. Plaintiff voluntarily put in evidence all the patents set up in the Answer. Upon the appeal the defendant did not appear. The question of failure to file disclaimers was not raised or even considered (53 F. (2d) 441). The case was substantially an *ex parte* proceeding. Appellant filed a petition for writ of certiorari in the Supreme Court to the Circuit Court of Appeals for the Sixth Circuit and this was denied. (R., p. 4; 285 U. S. 545.)

Four years and eleven months elapsed between the decision of invalidity of the group A claims in the Seventh Circuit and the institution of the present suit against appellee, during which the aforesaid proceedings took place.

The facts as to the pendency of the Bowman case are relied upon most strongly by appellant to excuse the delay in filing disclaimers if the disclaimer statutes are found to apply to the facts outlined herein, or to show that the period of delay has not yet begun to run (Appellee's Brief, Points II-III, pp. 9-26).

This is not a case where the whole patent was held invalid in the first suits (R., pp. 2-3). It is a case where appellant is attempting to maintain a suit on claims not previously held invalid without having disclaimed claims previously held invalid (R., p. 2).

Questions Presented.

The questions concerning which the Circuit Court of Appeals desires the instruction and advice of the Supreme Court of the United States are as follows:

"1. Where certain but not all of the claims of a patent are in suit, and all of the claims in suit are held and decreed to be invalid pursuant to a finding and judgment to that effect of the Circuit Court of Appeals of the circuit, may the owner of the patent maintain a suit afterward brought thereon in the same judicial circuit as that in which the first cause was decided, and against a different defendant not involved in the first suit—the second suit being based on the claims held in the prior suit to be invalid and on other claims of the same patent not previously adjudicated—where the owner of the patent wholly failed and omitted to file any disclaimer of the claims held in the first suit to be invalid, and where, between entry of decree of invalidity of the claims in the first suit and the bringing of the second suit in the same circuit, reasonable time had elapsed for filing such disclaimer?

"2. If question (1) is answered in the affirmative does the intervention of a period of approximately five years between the final judgment in the first suit and the institution in the same circuit of the second suit constitute delay so unreasonable as to bar the second suit for want of disclaimer of the claims which had been held to be invalid?

"3. If question (2) is answered affirmatively, may the institution or pendency of other suits in another judicial circuit or circuits after entry of final decree in the first suit, based on claims of the patent so held invalid and on other claims thereof not previously adjudicated to be invalid, excuse the failure to file disclaimer of the claims held invalid prior to instituting the later suit in the same circuit?"

The Statutes Involved.

The statutes involved are those directed to disclaimers in patent cases and appear as R. S. Section 4917; 35 U. S. C. A. 65 and R. S. Section 4922, 35 U. S. C. A. 71. These statutes may be found in the Appendix attached to this brief.

Introduction to Argument.

Appellant's contentions are based upon two main propositions:

1. The disclaimer statutes have no application to the facts of this record.

2. If the disclaimer statutes are applicable to the facts of this record these facts also excuse the delay or failure to file disclaimers.

Appellee's argument is based primarily upon the fact that the disclaimer statutes are applicable to the facts of this record and that the facts in the case of *Ensten* v. *Simon, Ascher & Co.*, 282 U. S. 445; 51 Sup. Ct. 207, are paralleled by the facts of this case with certain exceptions where such facts show an even further disregard of the disclaimer statutes.

Prior to the passage of the disclaimer statutes, when one claim of a patent was held to be invalid by a court of competent jurisdiction and the patentee could not go to a higher court, or would not go to a higher court, the entire patent became void. (*Ensten* v. *Simon, Ascher & Co.*, 282 U. S. 445; 51 Sup. Ct. 207.) The disclaimer statutes were passed so as to permit such patentee to bring other suits, under certain circumstances, upon those parts of the patent not previously held void—

"But no patentee shall be entitled to the benefits of this Section if he has unreasonably neglected or delayed to enter a disclaimer."

(R. S. 4922, 35 U. S. C. A. 71.)

These disclaimer statutes do not in so many words prevent a patentee whose entire patent has been judicially declared invalid from entering another circuit and attempting to save something from that patent through another judicial determination. We do not have that state of facts in the instant case. Nor do the disclaimer statutes specifically forbid a patentee who has had certain claims of his patent declared invalid from entering another circuit upon those specific claims in an attempt to save something from those invalid claims. Neither does this state of facts exist in the instant case.

The disclaimer statutes do say, substantially, that where claims of a patent are held invalid and something still remains in the patent in the form of other claims the patentee may maintain a suit on those other claims providing a disclaimer is filed to the invalid claims. Conversely, where certain claims of a patent have been held invalid a patentee may not maintain suit on other claims of that patent until a disclaimer to the invalid claims has been filed. (35 U. S. C. A. 71; R. S. 4922.)

The facts outlined in the last paragraph are broadly the facts of the case at bar, and it is submitted that the disclaimer statutes do apply.

Appellee, therefore, will show how and why the disclaimer statutes are applicable to the circumstances of this case, how the facts parallel those of the Ensten case, and how the technicalities relied upon by appellant in an attempt to excuse the delay in disclaiming, or to excuse the application of the disclaimer statutes, are really non-existent or fall by their own weight.

SUMMARY OF ARGUMENT.

Point I.

The facts of this case and the facts of the Ensten case strictly applying the disclaimer statutes parallel one another.

Ensten v. *Simon, Ascher & Co.*, 282 U. S. 445; 51 Sup. Ct. 207.

Point II.

The disclaimer statutes are applicable to the facts of this case.

35 U. S. C. A. 65; R. S. Sec. 4917.
35 U. S. C. A. 71; R. S. Sec. 4922.

Point III.

By the very wording of the disclaimer statutes they are jurisdictional in their nature.

35 U. S. C. A. 71; R. S. Sec. 4922.
Ensten v. *Simon, Ascher & Co.*, 282 U. S. 445; 51 Sup. Ct. 207.
R. Hoe & Co. v. *Goss Printing Press Co.*, 31 Fed. (2d) 565 (C. C. A. 2).
Liquid Carbonic Co. v. *Gilchrist Co.*, 253 Fed. 54; 58 (C. C. A. 7).

Point IV.

Claims held invalid for lack of invention are within the disclaimer statutes.

Point V.

Specific disclaimers to some of the claims of the patent do not affect claims remaining in the patent.

Graham v. *Earl*, 92 F. 155, 159 (C. C. A. 9).

United States Metallic Packing Co. v. *Hewitt Co.*, 236 Fed. 739, 742 (C. C. A. 7); certiorari denied 242 U. S. 651; 37 Sup. Ct. 243).

Point VI.

The technicalities urged by appellant do not take the facts of this case from within the disclaimer statutes nor excuse delay in filing disclaimers thereunder.

ARGUMENT.

Point I.

The Facts of this Case and the Facts of the Ensten Case Strictly Applying the Disclaimer Statutes Parallel One Another.

The present case involves a patent in which claims of group A (claims 1, 3, 4, 5, 6, 7, 10, 11, 12, 13, 14, 17, 18, 21, 22, 23 and 24) were held invalid. Nearly five years later appellant, without filing disclaimers, brought suit on claims of group B (claims 8 and 9) of said patent, not previously held invalid, joining the claims of group A.

In the case of *Ensten* v. *Simon, Ascher & Co.*, 282 U. S. 445; 51 S. Ct. 207, there was a patent in which the claim of group A (claim 2) was held invalid and claims of group B (claims 1, 3, 4 and 5) were held valid and infringed. The patentee disclaimed group A within two years. Thereafter the patentee brought

suit in another circuit on claims of group B without joining group A theretofore disclaimed.

The differences in the facts of these cases are (1) in the Ensten case a disclaimer was filed while none was filed in the instant case; and (2) in attempting to maintain the later suit upon the claims of group B, Ensten did not join his group A claim, while in the instant case claims of group A were joined. An important question, therefore, presents itself as to whether if Ensten had not disclaimed group A (claim 2) but had included it in the later suit, the result of that suit would have been different. It is these facts which are present in the case at bar.

Appellant says that if these are the facts it is excused from filing disclaimers by reason of what took place in the Sixth Circuit. The facts there were the same. Appellant brought suit on group B (claim 9) and joined the previously-held invalid claims of group A. The question of disclaimers not having been raised, the court did not discuss the applicability of the Ensten case. The claims of the patent would never have been considered if these facts had been called to the attention of the Circuit Court of Appeals for the Sixth Circuit. The disclaimer statute says appellant may maintain a suit on claims of group B, but he shall not be entitled to maintain such a suit if he has unreasonably neglected or delayed to enter a disclaimer of the claims of group A (R. S. 4922; 35 U. S. C. A. 71). Nothing could be clearer than the wording of this statute in view of its interpretation in the Ensten case. There are no exceptions to this rule among the cases. No suit can be maintained upon the claims of group B until the claims of group A are disclaimed.

Point II.

The Disclaimer Statutes Are Applicable to the Facts of this Case.

The historical background for the disclaimer statutes is set forth in the case of *Ensten* v. *Simon, Ascher & Co.,* 282 U. S. 445, 452, 51 S. Ct. 207, 209. To remedy the rigid common law that a patent with an invalid claim was entirely void, the disclaimer statutes, through one section, permitted a disclaimer of that part of the patent not invented by the patentee. The second section permitted the patentee to maintain a suit upon that part of his patent which he had invented provided he had first disclaimed that which he had not invented.

Nothing is said in these statutes about the maintenance of suits by the patentee upon that part of the patent judicially declared to be invalid and cases involving such facts are not pertinent to a decision of this case. The latter involves facts wherein the patentee is attempting to maintain suit upon that part of the patent not judicially declared void without disclaiming the part judicially declared void (R., p. 2). It was to assist the patentee to save a portion of his patent that the disclaimer statutes were passed. If the patentee could not maintain his suit upon what remained in his patent before the passage of the disclaimer statutes, certainly he cannot maintain a similar suit after the passage of those statutes without strictly complying therewith.

Point III.

By the Very Wording of the Disclaimer Statutes They Are Jurisdictional in Their Nature.

A study of the cases discloses that a patentee is not permitted to maintain a suit upon that portion of his patent not judicially declared invalid until he has disclaimed that portion of his patent judicially declared void. Even in the same suit where some of the claims of a patent are held void and some are upheld by a Circuit Court of Appeals, the patentee may not further maintain that suit for the purposes of an accounting until he has filed a disclaimer to the void claims (*Liquid Carbonic Co.* v. *Gilchrist,* 253 F. 54, 58; C. C. A. 7), or applied to the Supreme Court for a writ of certiorari and been vindicated, or disclaimed after the petition for said writ was denied (*Hoe & Co.* v. *Goss Printing Press Co.,* 31 F. (2d) 565; C. C. A. 2).

In the case of *Ensten* v. *Simon, Ascher & Co.,* 282 U. S. 445, 51 S. Ct. 207, the later suit in the Second Circuit was dismissed without passing upon the merits of the case because of unreasonable neglect and delay in filing disclaimers. After the Sixth Circuit suit, Ensten had applied for a preliminary injunction against Simon, Ascher & Company in the District Court for the Southern District of New York. That court not only refused a preliminary injunction but dismissed the bill for unreasonable delay in filing a disclaimer, which rulings were affirmed on appeal (38 F. (2d) 71).

The result under the decisions of these cases and other similar ones is that before a case of this nature may be maintained upon the merits, either in the same suit or in another suit, upon parts of a patent not declared invalid, the courts will first determine

whether a proper disclaimer has been filed, or whether the patentee has vindicated himself, with respect to that part of the patent held void, by appeal to a higher court or by way of writ of certiorari from the Supreme Court.

Consequently, the Circuit Court of Appeals for the Seventh Circuit is proceeding properly in this case in establishing the effect of appellant's failure to file disclaimers before it proceeds with a decision of the case upon the merits.

Point IV.

Claims Held Invalid for Lack of Invention Are Within the Disclaimer Statutes.

Appellant's play on words that "there has been no contention that Blair claimed more than he invented; the sole contention has been that he invented nothing" (Brief, p. 17) is clever but futile. If Blair invented nothing and claimed something he certainly claimed more than he invented. The nothing that Blair invented was defined by the Circuit Court of Appeals for the Seventh Circuit and is to be found in the claims of group A. Claims of group B have never been passed upon by a Circuit Court of Appeals. The something that Blair invented may be found among those claims. But unless disclaimers are filed that something cannot be saved.

The whole effect of appellant's argument in its brief is to belittle the claims of group B which have not been finally passed upon and to insist upon the claims of group A previously held void. Whether a patent is held invalid *in toto* is to be determined not by the *obiter dictum* of an opinion but by the facts and the actual decision. The patent of appellant was never

held invalid *in toto* (R., pp. 2-3). If nothing remained after claims of group A were held invalid, why was appellant maintaining a suit in the Sixth Circuit on a group B claim and why is it now maintaining a suit on group B claims (claims 8 and 9) in the Seventh Circuit?

Point V.

Specific Disclaimers to Some of the Claims of the Patent Do Not Affect Claims Remaining in the Patent.

Appellant argues that all of the material and substantial parts of the patented device were in the claims of group A, were held invalid, and nothing remains in its patent if it disclaims group A. Group B is for "minutia," says appellant. It might possibly be that the patentee, if he invented anything, invented only minutia. Claims broader than the minutia might be invalid for many reasons, including lack of invention by reason of his claiming more than he was entitled to and thereby claiming as well the prior art which he did not invent.

If at this time a patent should issue in the automobile field including a claim for "a body portion, wheels rotatably mounted on said body portion, an engine mounted on said body portion, and means operatively connecting said engine to said wheels for rotating the same upon operation of said engine," it undoubtedly would be void, in view of the prior art, for lack of invention by reason of the patentee claiming more than he invented. Suppose now his patent in addition contained claims for minutia, such as his exact means for operatively connecting the wheels to the engine, as by a certain type of shaft, or clutch,

or both together, thereby producing additionally an entirely new and different entity. If the broad claim were held to be void he would be forced to disclaim before he could sue another upon his claim for minutia. If he disclaims his broad claim does he thereby disclaim everything in his claim for minutia except his particular shaft or clutch or both? Appellant thinks so. Appellant's contention is that he has nothing left but a shaft or clutch without cooperating wheels, body or engine because these elements, as words, were mentioned in the broad claim. The entity of the claim for minutia has disappeared. By analogous reasoning, appellant (Brief 14) says that should it disclaim the claims of group A then all it would have left in claims 8 and 9 of group B is a heat-insulating air space.

Obviously the answer is that a disclaimer to a claim disclaims the particular combination of that claim. Another claim with other coacting elements included therein is a separate and distinct combination and another entity. In *United States Metallic Packing Co.* v. *Hewitt Co.*, 236 Fed. 739, 742 (C. C. A. 7), the court said:

> "Clearly the second claim was disclaimed because it covered, not a ring, but an old combination of the ring and the other elements used in the stuffing box. The packing ring in this combination was described only as composed of interlocking segments and formed with a conical end. Obviously neither this claim nor its disclaimer can extend or limit the scope of the first claim, the only claim for a special ring construction."

In *Graham* v. *Earl*, 92 Fed. 155, 158, 159 (C. C. A. 9), the court said:

> "Claims 1 and 2 of the patent just referred to are exceedingly broad, and cover all possible

means for holding the lids of the ventilators open in oppositely inclined positions, while its claims 3 and 4 are more narrow, and cover only the specific means therein particularly described for holding such lids open. The whole argument of the plaintiff in error upon this point seems to rest upon the proposition that, as claims 1 and 2 are broad enough in their descriptive language to include the specific combinations covered by claims 3 and 4, plaintiff's disclaimer of claims 1 and 2 was, in legal effect, a disclaimer of the particular device described in claims 3 and 4; in other words, that the particular means for holding the lids of the ventilators open as described in claims 3 and 4 were thus disclaimed, because such means are covered by the broad language of claims 1 and 2.

. . . . . .

"Applying this rule of interpretation to the disclaimer filed by the plaintiff in this action, it would seem too clear to admit of any doubt that such disclaimer cannot be given the broad and sweeping effect claimed for it by the plaintiff in error. On the contrary, the only reasonable construction which can be given the disclaimer of claims 1 and 2 is that the plaintiff intended to thereby limit his patent to the specific invention described in the remaining claims of his specifications, and not to abandon such remaining claims."

The citations from Robinson on Patents by appellant (Brief, p. 16) are directed to the amendment of a claim by disclaiming a part of the claim and are not in point in the determination of the question of disclaimer as raised in this case.

In Section 650 (Volume II, p. 289) of the same work by Professor Robinson appears the following:

"The effect of a disclaimer is confined to the excess which it removes from the apparent protection of the patent. Except as to this the patent

> remains operative to the same extent as before the disclaimer was filed. The disclaimer of a void Claim does not affect such other Claims of the patent as by themselves are valid, nor does the disclaimer of the excessive portion of a Claim impair the force of what is not disclaimed."

This observation shows that Robinson realized the distinction made between disclaiming excess parts of a claim and disclaiming a whole claim of excess where other claims remain in the patent. It effectively disposes of appellant's argument that there is no such distinction, and that, with the invalidation of claims of group A, if disclaimers were filed, nothing would remain in the patent as expressed by the claims of group B.

In *Winans* v. *New York & Erie R. R. Co.*, 62 U. S. (21 How.) 88, the patent contained only one claim. (Fed. Cas. 17,863.) Consequently the language of the Supreme Court contained in appellant's statement, "that disclaimers are not involved 'where the disclaimer, to be effectual, would include the whole invention'" (Appellant's Brief, p. 15) was perfectly sound and appropriate for that case. A disclaimer of that claim would have left the patentee with nothing.

The case of *Altoona Publix Theatres, Inc.* v. *American Tri-Ergon; Inc.*, 294 U. S. 477, 489, 490; 55 S. Ct. 455, 460, cited under appellant's Point IV, deals with circumstances where the patentee attempts to amend a claim by disclaiming a part of that claim or amends by adding elements to that claim by disclaimer, and has no bearing upon this case. For a distinction between the Altoona case and the case at bar see the cases cited in Note 2 of the report of the Altoona case.

The other cases cited under Point IV are equally not in point. One, *Gill* v. *Wells*, 89 U. S. (22 Wall.)

1, involved a reissue patent having new matter, and the other, *Vance* v. *Campbell,* 66 U. S. (1 Black.) 427, involved alleged infringement where the alleged infringing device omitted an element of a combination claim and this court refused to permit the patentee to disclaim that element of its claim or to speak of that element as immaterial or useless.

The appellant is not asked to give up one element of an entity but to give up an entire entity that does not belong to it in order to hold on to another entity that may belong to it.

Point VI.

The Technicalities Urged by Appellant Do Not Take the Facts of this Case From Within the Disclaimer Statute Nor Excuse Delay in Filing Disclaimers Thereunder.

Most of appellant's technicalities are discussed under Points III to V of this brief. Summarized they are:

1. Proposition: Where a claim has been held void for lack of invention by disclaiming that claim the patentee disclaims every element of that claim when repeated in other claims of the same patent. Citations where claims have been amended by adding or cancelling elements therefrom are set up in support of this proposition. Therefore, says appellant, when one claim is disclaimed all other claims are likewise disclaimed to the extent that they use the same elements. Consequently no disclaimer need be filed as nothing substantial is left in any of the claims.

Answer: The same argument obviously may be applied to claims whether held invalid for lack of inven-

tion, aggregation, anticipation or prior invention. The fallacy of this reasoning is shown by the cases cited in Point V of this brief.

2. Proposition: The entire patent was held void by the Circuit Court of Appeals for the Seventh Circuit (Appellant's Brief, p. 17), and, therefore, no disclaimer need be filed.

Answer: This is an extraordinary statement in view of the facts cited by the Circuit Court of Appeals in its record on this certificate (pages 2 and 3) where only certain claims, group A, are set forth as being held invalid in the earlier suits.

3. Proposition: Appellant's position as to the validity of the claims of group A was vindicated in the Sixth Circuit (Appellant's Brief, pp. 17 to 26).

Answer: Appellee submits that the Sixth Circuit suit was nothing but the maintaining of a suit upon a presumptively valid part of appellant's patent without having disclaimed the judicially-declared invalid parts of the patent and that the courts of the Sixth Circuit had no jurisdiction to pass upon the merits of the case. Appellant did not choose to vindicate its position by seeking a writ of certiorari from this Court after the early decisions of the Seventh Circuit (*Hoe & Co.* v. *Goss Printing Press Co.*, 31 F. (2d) 565) but went to another Circuit as in *Ensten* v. *Simon, Ascher & Co.*, 282 U. S. 445; 51 S. Ct. 207. This is at least one breach in appellant's continuity of action. It did not even seek vindication of its position as to the invalid claims of group A alone. Though the disclaimer statutes applied, it failed to bring itself under the beneficent provisions of those statutes. Instead, it maintained a suit upon a claim of group B without filing disclaimers as to the invalid claims of group A.

4. Proposition: Appellant insists that it has a right to be heard by the Supreme Court following a diversity of opinion between two Circuit Courts of Appeals before it must disclaim.

Answer: An argument of this nature was answered in *Ensten* v. *Simon, Ascher & Co.*, 282 U. S. 445, 453; 51 S. Ct. 207, 209, where the court said:

> "Under this view a patentee having procured allowance of an invalid claim may hold it in the face of the public for years (here nearly two years) with large possible advantage to himself and much injury to others. By the assertion of his apparent monopoly he may deter others from legitimate action and seriously prejudice the public."

Appellant has held claims of group A in the face of the public for over eight years to date and is attempting to maintain a suit upon claims of group B without disclaiming the group A claims.

If there are other points made by appellant, they are hidden among appellant's discussion of the merits of the patent side of the case into which appellee will not follow as it is unnecessary in a consideration of the merits of the disclaimer question upon the certified questions as to the law applicable to the facts of the Record before this Court.

Analysis of Appellant's Citations Urged in Support of Appellant's Point II.

—1—

Expanded Metal Co. v. *Bradford,* 214 U. S. 366; 29 S. Ct. 652.

In this case the patent contained but one claim for a method. It was held invalid in the Circuit Court of Appeals for the Third Circuit and later held valid by the Circuit Court of Appeals for the Sixth Circuit. Writs of certiorari were issued to these Courts of Appeals and the patent invalidated. Here the patentee could not disclaim. *Winans* v. *N. Y. & E. R. R. Co.,* 62 U. S. (21 How.) 88. This is the type of case that appellant is trying to qualify under.

—2—

Diamond Rubber Co. v. *Consolidated Rubber Tire Co.,* 220 U. S. 428; 31 S. Ct. 444.

The patent in this case contained but two claims both of which were upheld or invalidated as a whole in each of the preceding cases most of them involving copending suits. As a matter of fact these claims were first held valid in a series of suits. Both claims of the patent were held invalid in 116 F. 363 (C. C. A. 6) and was followed in 123 F. 85 (C. C. A. 6) as the Supreme Court had denied certiorari to the former case. The facts are identical with the Expanded Metal Case and have no application to the case at bar.

—3—

Dowagiac Manufacturing Company v. *Minnesota-Moline Plow Co.*, 235 U. S. 641; 35 S. Ct. 221.

This case involved a question of accounting following infringement suits favorable to the patent. No facts similar to the instant case were involved.

—4—

Abercrombie & Fitch v. *Baldwin*, 245 U. S. 198; 38 S. Ct. 104.

In the Seventh Circuit claims 1 and 4 of the patent were held invalid and non-infringed. A reissue was procured. The reissue claim 4 was held invalid in the Third Circuit after a trial in the Second Circuit upon the same claim had taken place, but before a decision in that suit. In the Second Circuit a decision was handed down holding claim 4 valid within one month of the Third Circuit decision. The time for filing disclaimers had not yet run even under the decision in *Hoe & Co.* v. *Goss Printing Press Co.*, 31 F. (2d) 565 (C. C. A. 6) at the time of the Second Circuit decision vindicating the plaintiff's position. Appellant had no such vindication. It did not begin to seek vindication until nine months after the invalidating holding (R., p. 3).

—5—

Railroad Supply Co. v. *Elyria Iron & Steel Co.*, 244 U. S. 285; 37 S. Ct. 502.

Preceding this case, infringement suits were copending in District Courts of the Seventh and Sixth Circuits. The District Court of the Seventh Circuit first held the claims of the patent non-infringed. Shortly afterward the District Court in the Sixth Circuit held

the claims invalid. Upon appeal the Court of Appeals for the Sixth Circuit affirmed its District Court and nine months later the Court of Appeals for the Seventh Circuit held the patents to be valid reversing its District Court. Plaintiff's continuity of action is clear. It appealed its cases within time and prosecuted all of these cases to a final conclusion including a petition to the Supreme Court for writ of certiorari to the Sixth Circuit where the claims had been held invalid. The cases were conducted substantially concurrently. It is interesting to note that appellant in the case at bar could have done this with the Cutino Company suit in the Eighth Circuit but did not choose to do this. In the Railroad Supply case there was no gap in plaintiff's continuity. Appellant also might have filed a petition for writ of certiorari to the Seventh Circuit in the case at bar as was done in this Railroad Supply Co. case.

—6—

T. H. Symington Co. v. *National Malleable Castings Co.*, 250 U. S. 383, 39 S. Ct. 542.

This case involved suits in two different Circuits upon similar but different patents for similar subject-matter. The issue before the Supreme Court was the determination of inventorship of the subject-matter of the patents. In the First Circuit the patentee of the patent in suit was held to be the inventor and in the other Circuit the patentee of the patent there in suit was held to be the inventor. The Supreme Court upheld the First Circuit. This case had nothing to do with disclaimers.

—7—

Meccano Limited v. *John Wanamaker,* 253 U. S. 136; 40 S. Ct. 463.

Suit was brought in a District Court of Ohio for patent infringement and on July, 1916, the patent was held valid. Unfair competition was found and an appeal taken. In the meantime a similar suit was brought against Wanamaker in a District Court of New York, December 9, 1916, and a preliminary injunction was granted January 12, 1917, upon the patent and unfair competition phases of the case. An appeal there was also taken. During the pendency of the appeal in the Second Circuit, the Court of Appeals for the Sixth Circuit in November, 1917, found the patent to be invalid but affirmed the unfair competition phase. Plaintiff in both cases then withdrew the patent from the Second Circuit case and moved for a final decision on the merits relative to the unfair competition phase, apparently upon grounds of *res judicata* because of the relationship between the defendants in the two suits. No question relative to disclaimers was involved as the patent was withdrawn in the Second Circuit suit. This case has no bearing upon the facts or the law of the case at bar.

—8—

New York Scaffolding Co. v. *Chain Belt Co.,* 254 U. S. 32; 41 S. Ct. 21.

In the first suit under the patent involved, the Court of Appeals for the Eighth Circuit held the patent valid and infringed, 224 F. 452.

In the second suit the Third Circuit held the patent invalid, 243 F. 577, citing the first suit.

In the third suit in the Seventh Circuit the patent was held valid and infringed, 245 F. 747.

Claims 1 and 3 only were involved in the Third and Seventh Circuit cases. The facts of these cases may also be seen at 254 U. S. 24; 41 S. Ct. 18. The plaintiff was not maintaining his suit in the Seventh Circuit upon claims not previously adjudicated invalid as in the case at bar, but was attempting to vindicate his position only as to claims previously held invalid, 245 F. 474. The facts of the instant case and the New York Scaffolding case are different. The facts of the New York Scaffolding Co. case have not been specifically passed upon by the Supreme Court as to disclaimer.

—9—

John E. Thropp Sons Co. v. *Sieberling,* 264 U. S. 320, 44 S. Ct. 346.

This case is not pertinent to the facts of the present case. Sieberling brought suit upon both the State patent and upon the Sieberling and Stevens patent in both the Sixth and Seventh Circuits. The Sixth Circuit passed upon the patents first, holding the State patent to be void and two claims of the Sieberling *et al.* patent void and one claim non-infringed. Sieberling then filed disclaimers to eight of the State patent claims and qualified disclaimers to the other eleven claims. It dropped the Sieberling and Stevens patent from the Third Circuit case and sued upon the State patent as amended. The Third Circuit upheld the State patent as amended by disclaimers. 284 F. 746. Obviously, nothing to assist in the instant case is found here.

—10—

Corona Tire Co. v. *Doran Chemical Corporation,* 276 U. S. 358; 48 S. Ct. 380.

All claims of the Weiss patent were found to be invalid by the Second Circuit as Weiss was not the inventor. In the Third Circuit Weiss was found to be the inventor and the claims were held valid. Obviously, the facts of the present case are not found here. When the Weiss patent and all of its invalid claims was taken to the Third Circuit, this was not maintaining a suit upon some material or substantial part of the patent not previously adjudicated invalid as in the case at bar. As all of the claims were judicially held invalid the wording of the Disclaimer Statutes did not apply. This is another case under which appellant would like to qualify.

—11—

Saranac Automatic Machine Corp. v. *Wirebound Patents Co.,* 282 U. S. 704; 51 S. Ct. 232.

In an earlier suit in the Seventh Circuit involving claims of the type of claim 25 of patent 1,128,145, the court held that if the patent was of an inventive character, it was not infringed, 25 F. (2d) 363, 365. In the Sixth Circuit, claims of the type of claim 25 were found to be valid. 37 F. (2d) 830. There is nothing to indicate that in the Sixth Circuit case the plaintiff was attempting to set up claims not previously adjudicated invalid. If the Seventh Circuit holding was as to invalidity, from the facts that can be found, the Sixth Circuit suit was upon the same claims. This is not the fact of the instant case.

Radio Corporation v. *Radio Engineering Laboratories,* 239 U. S. 1; 54 S. Ct. 752.

These cases involve the legal duel between DeForest and Major Armstrong. The DeForest claims were never invalidated prior to the Second Circuit decision to which the writ of certiorari was issued in this cited case. Previously, the Second Circuit had affirmatively upheld the Armstrong patent but it had not passed upon the DeForest patent prior to the decisions of the Third Circuit upholding the latter. This case is certainly not pertinent to the facts of the present case.

The facts of these cases are all distinguishable from the facts of the case at bar and from those in the case of *Ensten* v. *Simon, Ascher & Co.,* 282 U. S. 445; 51 S. Ct. 207, upon which appellee strongly relies. These cases cited by appellant in fact bear out the suggestions of appellee that a patentee may do something with his judicially-declared invalid claims in the way of asserting them. When he maintains suit upon other claims of his patent not judicially declared invalid, he comes within the specific wording of the disclaimer statutes and must have complied therewith or his whole patent is void.

Conclusion.

The answer to Question No. 1 should be in the negative. These are facts similar to those of *Hoe & Co.* v. *Goss Printing Press Co.* (C. C. A. 2), 31 F. (2d) 565; *Ensten* v. *Simon, Ascher & Co.,* 282 U. S. 445; 51 S. Ct. 207; and *Liquid Carbonic Co.* v. *Gilchrist* (C. C.

A. 7), 253 F. 54, 58, with the exception that claims previously held invalid were not again joined in those cases as they have been in the instant case.

The answer to Question No. 2 should be in the affirmative in view of the holding by the Supreme Court in *Ensten* v. *Simon, Ascher & Co.*, 282 U. S. 445, 51 S. Ct. 207, that a delay of nearly two years in filing disclaimers was fatal.

The answer to Question No. 3 should be in the negative as in the Sixth Circuit the suit was again maintained upon parts of the patent not previously declared invalid, without disclaimer of the claims previously held void. The court consequently passed upon the merits of one claim without having the question of disclaimers raised for its judgment. Moreover, after but one claim had been adjudicated valid appellant did not even then disclaim the other claims previously held invalid before proceeding against appellee upon claims not previously adjudicated. Finally, the breach in appellant's continuity of effort by failure to apply for writs of certiorari from the early Seventh Circuit decisions and its further failure to apply for a rehearing in the Sixth Circuit case to have the other claims of group A passed upon was fatal.

Respectfully submitted,

WM. NEVARRE CROMWELL,
Counsel for Appellee.

JAMES L. MCMANUS,
Of Counsel.

APPENDIX.

Disclaimer Statutes.

R. S. 4917; 35 U. S. C. A. 65:

"Whenever, through inadvertence, accident, or mistake, and without any fraudulent or deceptive intention, a patentee has claimed more than that of which he was the original or first inventor or discoverer, his patent shall be valid for all that part which is truly and justly his own, provided the same is a material or substantial part of the thing patented; and any such patentee, his heirs or assigns, whether of the whole or any sectional interest therein, may, on payment of the fee required by law, make disclaimer of such parts of the thing patented as he shall not choose to claim or to hold by virtue of the patent or assignment, stating therein the extent of his interest in such patent Such disclaimer shall be in writing, attested by one or more witnesses, and recorded in the Patent Office; and it shall thereafter be considered as part of the original specification to the extent of the interest possessed by the claimant and by those claiming under him after the record thereof. But no such disclaimer shall affect any action pending at the time of its being filed, except so far as may relate to the question of unreasonable neglect or delay in filing it."

R. S. 4922; 35 U. S. C. A. 71:

"Whenever, through inadvertence, accident, or mistake, and without any willful default or intent to defraud or mislead the public, the patentee has, in his specification, claimed to be the original and first inventor or discoverer of any material or substantial part of the thing patented, of which he was not the original and first inventor or dis-

coverer, every such patentee, his executors, administrators, and assigns, whether of the whole or any sectional interest in the patent, may maintain a suit at law or in equity, for the infringement of any part thereof, which was bona fide his own, if it is a material and substantial part of the thing patented, and definitely distinguishable from the parts claimed without right, notwithstanding the specifications may embrace more than that of which the patentee was the first inventor or discoverer. But in every such case in which a judgment or decree shall be rendered for the plaintiff no costs shall be recovered unless the proper disclaimer has been entered at the Patent Office before the commencement of the suit. But no patentee shall be entitled to the benefits of this section if he has unreasonably neglected or delayed to enter a disclaimer."

3

2

SUPREME COURT OF THE UNITED STATES.

Nos. 388 and 590.—October Term, 1935.

A. G. Triplett, R. M. Triplett, A. Nelson, et al., Petitioners, *vs.* Percival D. Lowell, Francis W. Dunmore and Dubilier Condenser Corporation.	On Writ of Certiorari to the United States Circuit Court of Appeals for the Fourth Circuit.
The Mantle Lamp Company of America, *vs.* Aluminum Products Company.	On Certificate from the United States Circuit Court of Appeals for the Seventh Circuit.

338

590

[March 30, 1936.]

Mr. Justice Stone delivered the opinion of the Court.

In No. 388 certiorari was granted, — U. S. —, to resolve questions as to the scope and effect of the disclaimer statute, R. S. §§ 4917, 4922, 35 U. S. C. §§ 65, 71, raised in a suit brought to enjoin infringement of several patent claims, some of which had previously been held invalid in an infringement suit in another circuit against different defendants.

In No. 590 like questions have been argued upon certificate to this Court, under § 239 of the Judicial Code, of the Court of Appeals for the Seventh Circuit.

No. 388.

Respondents in No. 388, before bringing the present suit, had sued in a district court in the third circuit to restrain infringement of Claim 9 of Patent No. 1635117, July 5, 1927, to Dunmore, for a signal receiving system, and of Claims 3 and 14 of Patent No. 1455141, May 15, 1923, to Lowell and Dunmore, for a radio receiving apparatus. Each claim was held invalid by the Court of Appeals for the Third Circuit, *Radio Corporation* v. *Dubilier Condenser Corporation*, 59 F. (2d) 305, 309, and petitions to this Court for certiorari were denied, 287 U. S. 648, 650. More than eight months after the denial of certiorari respondents filed, in the Patent Office, purported disclaimers of each of the claims thus held invalid, and more than a month later began the present suit in the

district court for Maryland to restrain infringement of the same claims and other claims of the same patents not previously adjudicated. A motion to dismiss the suits as to both patents for unreasonable delay in filing disclaimers of the claims previously held invalid, and because the disclaimers were inadequate, was granted by the District Court upon the latter ground.

The Court of Appeals for the Fourth Circuit reversed and ordered a new trial, 77 F. (2d) 556, holding that respondents were not barred from maintaining the second suit, against different defendants, for infringement of the claims previously held invalid and that the disclaimer of those claims was not prerequisite to maintenance of the suit upon the claims not previously adjudicated. It infimated that the second suit could not be maintained unless brought without unreasonable delay, but it concluded that it could not say that there had been unreasonable delay in the present case.

Whether the respondents' disclaimers are merely an attempted formal alteration of the claims so as to conform them more precisely to the specifications without changing their substance or conceding their invalidity, see *Carnegie Steel Co.* v. *Cambria Iron Co.*, 185 U. S. 403, 435, or whether they are in effect such alterations of the substance of the claims as to bring them within the requirements and limitations of the re-issue statute, R. S. § 4916, 35 U. S. C. 54, so as to render both the old and the new claims invalid, see *Altoona Publix Theatres, Inc.* v. *American Tri-Ergon Corporation*, 294 U. S. 477, 490-492, are questions which have been much argued here and below. In reaching its decision the Court of Appeals assumed, as we shall assume without deciding, that the disclaimers were inadequate because they failed to concede invalidity of the adjudicated claims. It concluded that if the same decision were reached, as to the validity of the claims previously adjudicated, as in the Third Circuit, the respondents' suit must fail both as to them and as to all the other claims, "even though some of them may be good. For it would then be established that the owner of the patent had failed to file disclaimers within a reasonable time after notice of the invalidity of some of the claims had been brought home to him." 77 F. (2d) 556, 561.

Revised Statutes, § 4917, provides that "Whenever, through inadvertence, accident, or mistake, . . . a patentee has claimed more than that of which he was the original or first inventor, . . . his patent shall be valid for all that part which

is truly and justly his own, . . . ", and authorizes him to file in the Patent Office a written disclaimer of "such parts of the thing patented as he shall not choose to claim." Revised Statutes § 4922 authorizes a patentee who has claimed more than that of which he was the inventor, to maintain a suit for the infringement of "any part" of the patent "which was *bona fide* his own, if it is a material and substantial part of the thing patented, and definitely distinguishable from the parts claimed without right, notwithstanding the specifications may embrace more than that of which the patentee was the first inventor or discoverer", but with the proviso that "no patentee shall be entitled to the benefits of this section if he has unreasonably neglected or delayed to enter a a disclaimer."

Petitioners contend that if any claim of a patent is adjudged invalid no further suit can be maintained upon it, or upon other claims of the patent without disclaimer of the claims previously held invalid. This contention is predicated upon the rule that, save for the disclaimer statute, adjudication of invalidity of any claim of a patent renders the entire patent void, and upon the assumption that by force of the statute, if not without it, an adverse decision on any claim is final and conclusive as to its invalidity, in any court, except as modified upon an appellate review. If this view be accepted, it follows that the right to maintain suit for infringement of the separable claims of a patent which already have been held valid, or have not been adjudicated, may alone be saved by disclaimer of all claims held invalid, within a reasonable time after their adjudication; the patentee may not contest again the validity of the claims held invalid and only by abandoning them by timely disclaimer may he litigate other claims.

Neither reason nor authority supports the contention that an adjudication adverse to any or all the claims of a patent precludes another suit upon the same claims against a different defendant. While the earlier decision may by comity be given great weight in a later litigation and thus persuade the court to render a like decree, it is not *res adjudicata* and may not be pleaded as a defense. See *Mast, Foos & Co.* v. *Stover Mfg. Co.*, 177 U. S. 485; *Sanitary Refrigerator Co.* v. *Winters*, 280 U. S. 30, 35. The disclaimer statute was enacted to mitigate the harsh rule[1] that the

[1] By § 3 of the Patent Act of 1793, 1 Stat. 318, and § 6 of the Patent Act of 1836, 5 Stat. 117, an accurate description in writing of the invention in the patent application was prerequisite to the award of a patent. Section 6

entire patent was destroyed if any claim were held invalid. See *Altoona Publix Theatres, Inc.* v. *American Tri-Ergon Corporation, supra,* 490; *Ensten* v. *Simon Ascher & Co.,* 282 U. S. 445, 452; *Hailes* v. *Albany Stove Co.,* 123 U. S. 582, 589; *Moody* v. *Fiske,* (C. C.) 2 Mason 112, 118, Fed. Cas. No. 9,745. The statute permits the patentee to abandon by disclaimer parts of the patent which he does not choose to claim, and if the disclaimer is timely and adequate it authorizes him to maintain suit for infringement of the separable parts which he does choose to claim. But neither in terms nor by implication does it deny to a patentee the right to bring a second suit for the infringement of a claim already held to be invalid. If such were its construction it would deny to a patentee the right to re-litigate claims held invalid when others are held valid or are not in issue, but would leave that right unaffected when the entire patent is held invalid, since in that case there would be nothing to disclaim. See *Winans* v. *New York & Erie R. R. Co.,* 21 How. 88, 103. Only a plain legislative command would justify a construction leading to such incongruous results.

While the contention now made is apparently for the first time seriously argued here, this Court has several times held valid the claims of a patent which had been held invalid by a circuit court of appeals in an earlier suit brought by the same plaintiff against another defendant. *Expanded Metal Co.* v. *Bradford,* 314 U. S. 366; *Diamond Rubber Co.* v. *Consolidated Rubber Tire Co.,* 220 U. S. 428; *Abercrombie & Fitch* v. *Baldwin,* 245 U. S. 198.[2] Before the establishment of the circuit court of appeals, an adverse decision as to the validity of a patent in one circuit appears not to have foreclosed litigation of the same issue in another, see *Barbed Wire Patent,* 143 U. S. 275; compare *United States* v. *American Bell*

---

of the Act of 1793, and § 15 of the Act of 1836, authorized the defendant in a patent suit, by way of defense, to prove that the specification of the patent "contains more than is necessary to produce the desired effect, ... or that the thing thus secured by the patent was not originally discovered by the patentee, ..." By the Act of 1832, 4 Stat. 551, it was provided that whenever any patent shall be invalid by reason of failure to comply with the requirements of § 3 of the Act of 1793, it should be lawful to grant a new patent to the patentee for his invention, upon surrender of the old patent and compliance with § 3 of the Act of 1793. Section 13 of the Act of 1836 similarly authorized the new patent to issue "in accordance with the patentee's corrected description and specification." Section 7 of the Act of 1837, 5 Stat. 191, carried into R. S. 4917, first permitted the patentee to preserve the valid part of his original patent by disclaimer.

[2] In other cases this Court has held invalid, upon examination of the merits, a patent which had been upheld by one court of appeals after being held invalid by another. Railroad Supply Co. *v.* Elyria Iron Co., 244 U. S. 285; Meccano, Ltd. *v.* John Wannamaker, 253 U. S. 136; New York Scaffolding Co. *v.* Chain Belt Co., 254 U. S. 32; Corona Cord Tire Co. *v.* Donan Chemical Corp., 276 U. S. 358; Saranac Automatic Mach. *v.* Wirebound Patents Co., 282 U. S. 704.

Telephone Co., 128 U. S. 315, 372. That it does not now is implicitly recognized by the practice established under § 240 (a) of the Judicial Code, and Rule 38 (5) of this Court, that certiorari will not usually be granted in patent cases unless there is a conflict in the decisions of circuits courts of appeals. We conclude that neither the rules of the common law applicable to successive litigations concerning the same subject matter, nor the disclaimer statute, precludes re-litigation of the validity of a patent claim previously held invalid in a suit against a different defendant.

It follows that want of disclaimer of claims previously held invalid can never be set up as a bar *in limine* to the maintenance of a second suit upon those claims, and any others of the patent, since the patentee is entitled to invoke in that suit the independent judgment of the court upon the validity of the claims which have been held invalid. In advance of its decision as to validity, that court cannot consistently hold that there is necessity for disclaiming claims which, although previously adjudged invalid, it may hold to be valid. The statute does not command that a court authorized to pass upon the validity of a claim shall accept as conclusive a previous adjudication of invalidity of the same claim for the purpose of ascertaining whether the disclaimer statute applies. On the contrary, § 4922 in terms permits the patentee to "maintain a suit . . . for the infringement of any part" of the patent "which was *bona fide* his own."

The court whose jurisdiction is invoked by such a suit must determine for itself validity and ownership of the claims asserted, notwithstanding a prior adjudication of invalidity of some of them, unless those issues have become *res adjudicata*, by reason of the fact that both suits are between the same parties or their privies. If it determines that the claims previously adjudicated are valid, there is no occasion for disclaimer. In such a case the intimation of the court below that the second suit must be brought within a reasonable time is without support, for if in that court the claims are upheld, there is nothing to disclaim and the statute does not apply. Only if it holds that the claims are invalid may it be called upon to apply the disclaimer statute and to decide whether the patentee, under all the circumstances presented, has unreasonably neglected or delayed to enter a disclaimer of the claim of whose invalidity he had notice in the prior suit.[3]

[3] We do not now determine the effect of the disclaimer statute when the second suit, either from choice or necessity, is confined to claims held valid

The disclaimer statute is remedial, and intended for the protection of both the patentee and the public. See *O'Reilly* v. *Morse*, 15 How. 62, 121. Both are protected by the construction which we adopt and which we think is the only admissible one. The patentee is free to preserve some of the claims of his patent by disclaiming others which have been held invalid, but the statute does not force him to pay that price in order to save them. He may relinquish the privilege of disclaimer and, proceed to re-litigate, in another court, the claims which have been declared to be invalid, but at the risk of loss in that court of the other claims of the patent even though valid, if it likewise holds invalid the previously adjudicated claims.

A different question is presented where the claims adjudged invalid are abandoned, whether by a tardy disclaimer or otherwise, and a second suit is brought to restrain infringement of other claims, see *Ensten* v. *Simon Ascher & Co., supra,* or where in the same suit in which some claims are held invalid the plaintiff seeks to secure without disclaimer the benefits of a favorable decision on other claims. See *R. Hoe & Co.* v. *Goss Printing Press Co.*, 31 F. (2d) 505; *Higgin Mfg. Co.* v. *Watson*, 203 Fed. 378; *Liquid Carbonic Co.* v. *Gilchrist*, 253 Fed. 54; *Herman* v. *Youngstown Car Mfg. Co.*, 191 Fed. 579.

We do not decide whether the purported disclaimers operate to enlarge the claims in such fashion as to render both the old and the new claims invalid by virtue of the reissue statute. See *Altoona Publix Theatres, Inc.* v. *American Tri-Ergon Corporation, supra,* 490-492. That question is not presented by the petition for certiorari. The courts below do not appear to have passed upon it, and it may be unnecessary to decide it on the new trial. The decree will be affirmed.

No. 590.

In No. 590 the questions certified are as follows:

1. Where certain but not all of the claims of a patent are in suit, and all of the claims in suit are held and decreed to be invalid pursuant to a finding and judgment to that effect of the Circuit Court of Appeals of the circuit, may the owner of the patent maintain a suit afterward brought thereon in the same judicial circuit as that in which the first cause was decided, and against a different

or not adjudicated in the earlier action. Whether the claims previously held invalid should be deemed abandoned and properly subject to disclaimer would depend upon special circumstances and involve questions not presented in the present suit.

defendant not involved in the first suit — the second suit being based on the claims held in the prior suit to be invalid and on other claims of the same patent not previously adjudicated—where the owner of the patent wholly failed and omitted to file any disclaimer of the claims held in the first suit to be invalid, and where, between entry of decree of invalidity of the claims in the first suit and the bringing of the second suit in the same circuit, reasonable time had elapsed for filing such disclaimer?

2. If question 1 is answered in the affirmative, does the intervention of a period of approximately five years between the final judgment in the first suit and the institution in the same circuit of the second suit constitute delay so unreasonable as to bar the second suit for want of disclaimer of the claims which had been held to be invalid?

3. If question 2 is answered affirmatively, may the institution or pendency of other suits in another judicial circuit or circuits after entry of final decree in the first suit, based on claims of the patent so held invalid and on other claims thereof not previously adjudicated to be invalid, excuse the failure to file disclaimer of the claims held invalid prior to instituting the later suit in the same circuit?

From the facts stated in the certificate it appears that the district court below, upon hearing the cause, decreed the several claims, on which the plaintiff relied, to be invalid "for various reasons, among them for neglect to file within reasonable time disclaimers" of the claims previously held invalid by the Court of Appeals for the same circuit. It does not appear whether the district court, independently of the defense of want of disclaimer, passed upon the validity of the claims previously adjudicated and decided that they were invalid upon the evidence presented, or whether it held that all inquiry as to their validity was foreclosed by the prior adjudication.

From what we have said in our opinion in No. 388, it is manifest that the effect rightly to be given to the failure to disclaim may turn upon the disposition which the trial court makes of the claims previously held invalid, and that there is no occasion for the application of the disclaimer statute until the trial court has itself passed on the validity of the previously adjudicated claims. The fact that the suit was brought in the same circuit where the court of appeals had previously held some of the claims invalid is immaterial, for the court must decide whether the issues of law and fact in the two cases are the same, and if they are not it is not bound by the earlier decision.

This Court cannot be required, by certificate, to answer, and it should not answer, questions which cover unstated matter "lurking in the record"; see *United States* v. *Meyer*, 235 U. S. 55, 66; *Chicago, B. & Q. Ry. Co.* v. *Williams*, 205 U. S. 444, 454; *Cross* v. *Evans*, 167 U. S. 60; *United States* v. *Hall*, 131 U. S. 50, 52; or questions which admit of one answer under one set of circumstances and a different answer under another, neither of which is stated to be the basis of the questions certified. See *White* v. *Johnson*, 282 U. S. 367, 371; *Hallowell* v. *United States*, 209 U. S. 101, 107; *Jewel* v. *Knight*, 123 U. S. 426, 435; *Enfield* v. *Jordan*, 119 U. S. 680.

Moreover, it does not appear that the claims not previously adjudicated constitute "a material and substantial part of the thing patented, and definitely distinguishable" from the claims held invalid, so as to admit of the application of § 4922. We are not required to answer academic questions, or questions which may not arise in the pending controversy. See *White* v. *Johnson*, *supra*, 373; *United States* v. *Hall*, *supra*; *Webster* v. *Cooper*, 10 How. 54, 55. For these reasons the first question is not answered.

The second and third questions, by their terms, require an answer only if the first is answered. In addition, the answers to both turn upon the question whether the patentee has "unreasonably neglected or delayed to enter a disclaimer" within the meaning of § 4922, which can be answered only in the light of all relevant circumstances and the inferences to be drawn from them. Such questions are not properly the subject of a certificate, especially where, as here, it fails to disclose whether all the relevant facts and circumstances have been certified. *Jewel* v. *Knight*, *supra*; *B. & O. Rr.* v. *Interstate Commerce Commission*, 215 U. S. 216, 221; *Chicago, B. & Q. Ry. Co.* v. *Williams*, *supra*, 452; *United States* v. *City Bank of Columbus*, 19 How. 385; *United States* v. *Bailey*, 9 Pet. 267, 274.

Such aid as we are able to give in answering questions as to the scope and effect of the disclaimer statute which may be involved in the pending cause is afforded by our opinion in No. 388.

The decree in No. 388 is affirmed.
The certificate in No. 590 is dismissed.